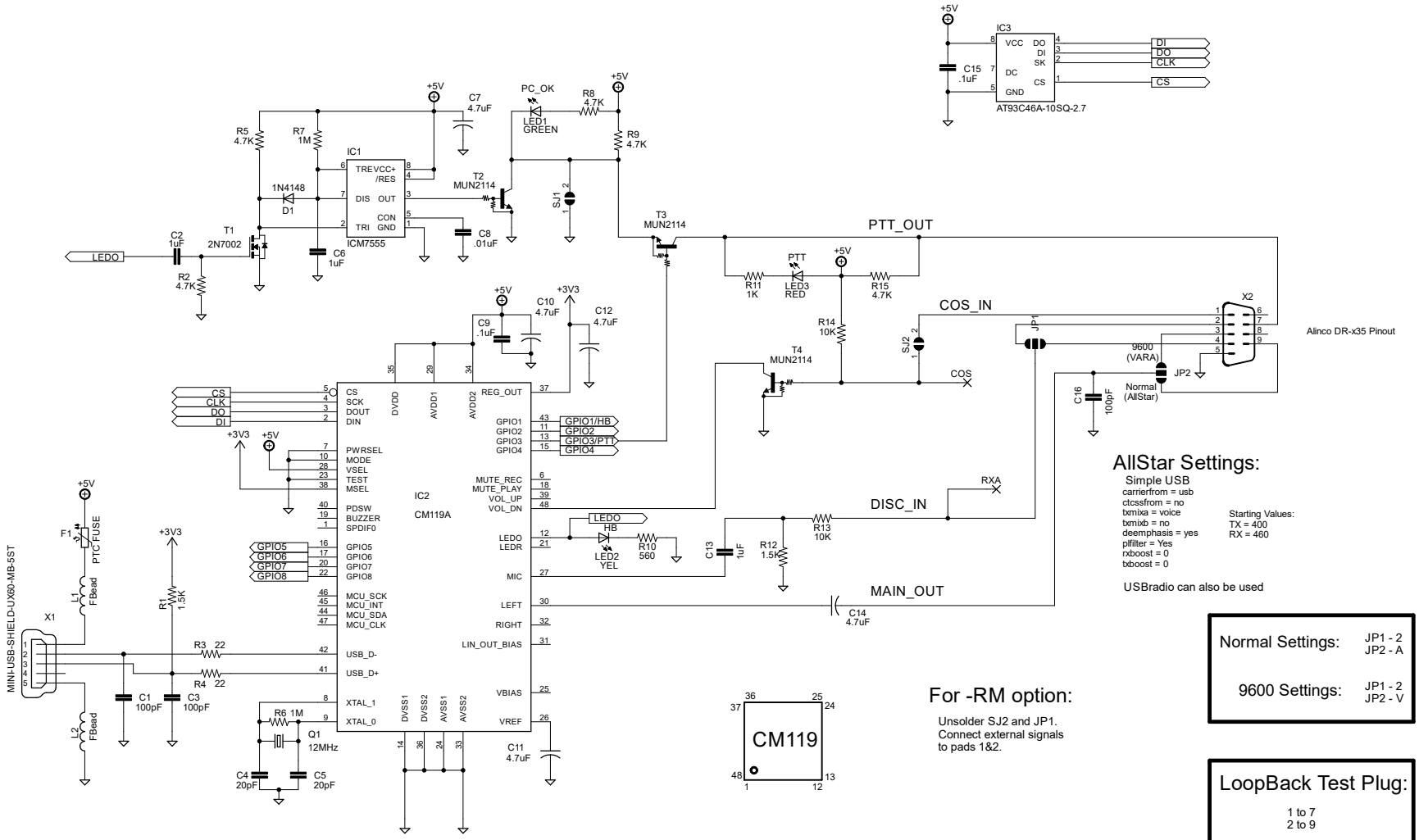
IC3
VCC
DO
DI
SK
DC
CS
GND
AT93C46A-10SQ-2.7
C15
.1uF
+5V
DI
DO
CLK
CS
IC1
TR
VCC+
/RES
DIS
OUT
CON
TRI
GND
ICM7555
R5
4.7K
R7
1M
1N4148
D1
C6
1uF
C7
4.7uF
C8
.01uF
PC_OK
LED1
GREEN
R8
4.7K
R9
4.7K
T2
MUN2114
SJ1
T3
MUN2114
PTT_OUT
LEDO
C2
1uF
T1
2N7002
R2
4.7K
R11
1K
PTT
LED3
RED
R15
4.7K
COS_IN
R14
10K
SJ2
T4
MUN2114
COS
JP1
X2
9600
(VARA)
Normal
(AllStar)
JP2
C16
100pF
Alinco DR-x35 Pinout
C10
4.7uF
C12
4.7uF
C9
.1uF
+3V3
CS
CLK
DO
DI
IC2
CM119A
DVDD
AVDD1
AVDD2
REG_OUT
GPIO1
GPIO2
GPIO3
GPIO4
GPIO1/HB
GPIO2
GPIO3/PTT
GPIO4
PWRSEL
MODE
VSEL
TEST
MSEL
PDSW
BUZZER
SPDIF0
MUTE_REC
MUTE_PLAY
VOL_UP
VOL_DN
LEDO
LEDR
MIC
LEFT
RIGHT
LIN_OUT_BIAS
VBIAS
VREF
GPIO5
GPIO6
GPIO7
GPIO8
MCU_SCK
MCU_INT
MCU_SDA
MCU_CLK
USB_D-
USB_D+
XTAL_1
XTAL_0
DVSS1
DVSS2
AVSS1
AVSS2
LEDO
HB
LED2
YEL
R10
560
C13
1uF
R12
1.5K
R13
10K
RXA
DISC_IN
MAIN_OUT
C14
4.7uF
C11
4.7uF
F1
PTC FUSE
L1
FBead
L2
FBead
X1
MINI-USB-SHIELD-UX60-MB-5ST
R1
1.5K
R3 22
R4 22
C1
100pF
C3
100pF
R6 1M
Q1
12MHz
C4
20pF
C5
20pF
CM119
AllStar Settings:
Simple USB
carrierfrom = usb
ctcssfrom = no
txmixa = voice
txmixb = no
deemphasis = yes
pfilter = Yes
rxboost = 0
txboost = 0
Starting Values:
TX = 400
RX = 460
USBradio can also be used
Normal Settings: JP1 - 2 JP2 - A
9600 Settings: JP1 - 2 JP2 - V
For -RM option:
Unsolder SJ2 and JP1.
Connect external signals
to pads 1&2.
LoopBack Test Plug:
1 to 7
2 to 9
Spare
Repeater-Builder.com
TITLE: RB_RIM_Alinco_V2
Document Number: N3XCC
REV: A
Date: 8/5/2025 12:11:52 PM
Sheet: 1/1

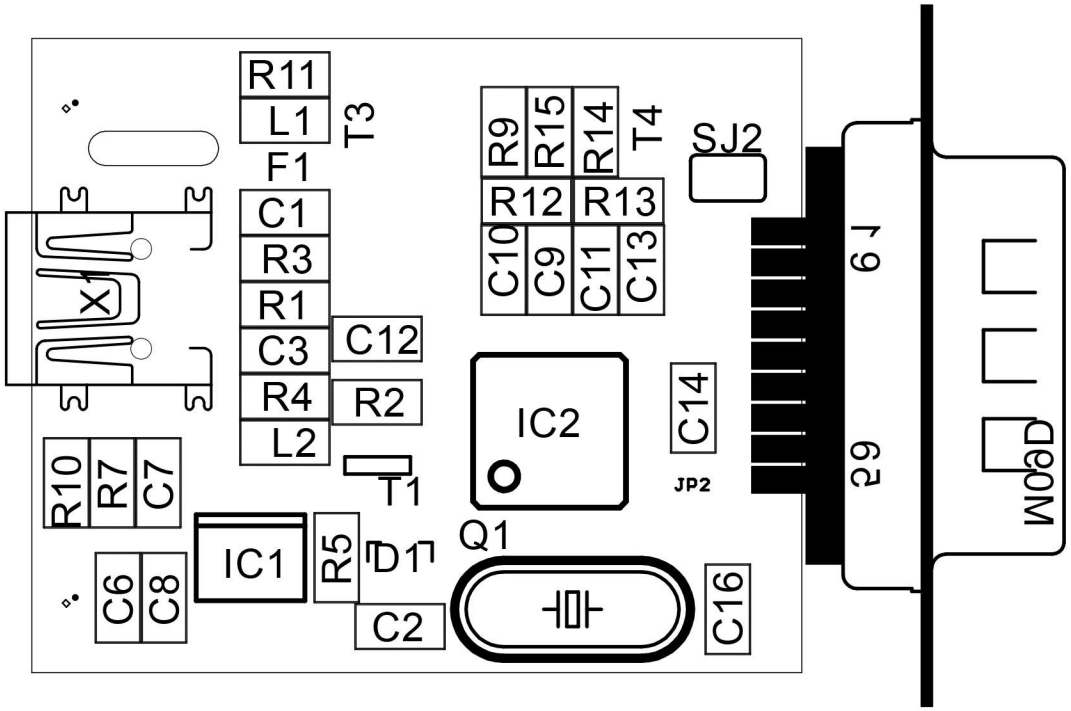
R11
L1
T3
F1
C1
R3
R1
C3
R4
L2
X1
R10
R7
C7
C6
C8
IC1
R5
D1
C2
C12
R2
T1
Q1
R9
R15
R14
T4
R12
R13
C10
C9
C11
C13
IC2
C14
JP2
SJ2
C16
J9
DB9M

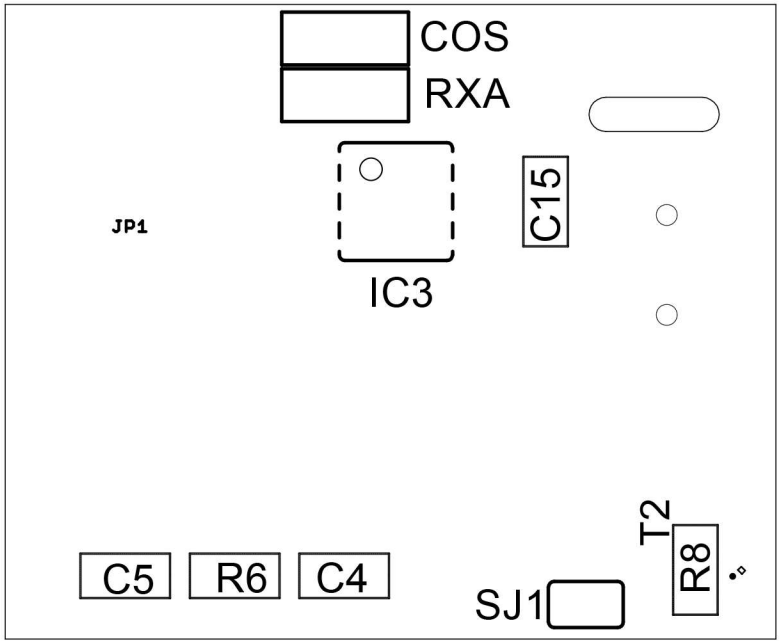
COS
RXA
JP1
IC3
C15
C5
R6
C4
SJ1
T2
R8