Z E T R O N

Model 25 Programmable Encoder Technical Manual

#025-9018R

This manual applies only to Model 25s with version 1.50 or later software.

COPYRIGHT 1985–1993 ZETRON, INC.

MODEL 25
TECHNICAL MANUAL

TABLE OF CONTENTS

1. INTRODUCTION

Introduction 1-1

Installation precautions 1-2
Connection of the Model 25 power supply 1-2
Proper grounding of the Model 25 encoder 1-3

Application and service information 1-4

2. SPECIFICATIONS

General specifications 2-1

Special features specifications 2-2

Electrical specifications 2-3

3. DETAILED OPERATION

Front panel description, encoder with keypad 3-1

Front panel description, instant calls 3-1

Status description, encoder with keypad 3-2

Status description, instant calls 3-2

Power-on 3-4

Keypad (manual) operation 3-5
The keyboard stack (the ENTER key) 3-6
Clearing an entry (the CLEAR ENTRY key) 3-6
Sending a call (the SEND keys) 3-6
Sending live calls 3-7
Generating alerts (the ALERT key) 3-7
Displaying the time (the '*' key) 3-8
Accessing call stacks 3-8

Instant call operation 3-8
Instant call key numbering 3-10

Remote control operation / call logging 3-11
Call logging 3-13

Setting the time clock 3-15

MODEL 25
TECHNICAL MANUAL

TABLE OF CONTENTS
(cont'd)

3. DETAILED OPERATION (cont'd)

Causes for error beeps 3-16

The calling sequence 3-18
The control relays 3-18
Channel busy monitoring 3-18
Keying method 3-20
Calling sequence summary 3-20

Relay timing diagram 3-25

4. ENCODER INSTALLATION

Proper grounding of the Model 25 encoder 4-1

Inside the encoder 4-2

Model 25 - disassembly and circuit location view of encoder 4-4
Keypad enable/disable 4-5
Display scroll enable/disable 4-5
Channel busy impedance 4-6
Audio level adjustment range 4-6
Computer port connector position 4-6
Instant call clear key function 4-7
Instant call left column function 4-7

Outside the encoder 4-8
Programming enable/disable switch 4-8

Model 25 - rear view of encoder 4-9
Transmitter/console control 4-12
Channel busy monitors 4-14
Audio output/muting 4-14
Tone monitor 4-15
Auxiliary panels 4-16
Power 4-16

Computer port 4-17

Installation aids 4-20
Deviation test 4-20
Verification mode 4-20
Serial port control 4-21

Panel labels 4-22

The clock option 4-23

Software changes 4-24

MODEL 25
TECHNICAL MANUAL

TABLE OF CONTENTS
(cont'd)

5. AUXILIARY PANEL INSTALLATION

Installation warning 5-1

Option selection 5-2

Connecting to the encoder 5-2

Connecting power 5-3

Panel labels 5-3

Model 25 - rear view of auxiliary panel 5-4

6. THEORY OF OPERATION

Basic functional description 6-1

System block diagram 6-3

Digital encoder board block diagram 6-4

Digital encoder board 6-5
- Microprocessor control 6-5
- Reset circuit 6-5
- Memory 6-6
- Front panel input/output (I/O) 6-6
- Relay I/O 6-6
- Computer port and loop I/O 6-6
- Beeper driver 6-7

Analog encoder board block diagram 6-8

Analog board 6-9
- Channel busy inputs 6-9
- Relays 6-9
- Tone generators 6-9

Combo front panel board block diagram 6-12

Front panel board 6-13

Clock board block diagram 6-14

Clock board 6-15

Encoder supply board 6-15

MODEL 25
TECHNICAL MANUAL

TABLE OF CONTENTS
(cont'd)

6. THEORY OF OPERATION (cont'd)

Instant call panel driver board block diagram 6-16

Instant call panel driver board 6-17
- Microprocessor control 6-17
- Reset circuit 6-17
- Loop input/output 6-17
- Beeper 6-17
- Instant call switch panel I/O 6-18
- Power regulators 6-18

Instant call switch panel board block diagram 6-20

Instant call switch panel board 6-21

7. TROUBLESHOOTING

Power-on self-test 7-1

Continuous self-test 7-4

Instant call key test 7-5

Encoder fault identification 7-6

Instant call fault identification 7-10

Parts lists, schematics, parts identification 7-12

Interconnect diagram 7-13

Encoder with keypad parts list (901-9019N) 7-14

Aux instant call panel parts list (901-9020G) 7-16

Encoder w/o keypad assy parts list (901-9022L) 7-17

Encoder supply sub-assy parts list (815-9008C) 7-19

Digital board schematic (008-9022L) 7-20

Digital board parts I.D. (702-9022L) 7-21

Digital board parts list (702-9022L) 7-22

TABLE OF CONTENTS
(cont'd)

7. TROUBLESHOOTING (cont'd)

Analog board schematic (008-9025G) 7-24
Analog board parts I.D. (702-9025G) 7-25
Encoder analog board parts list (702-9025G) 7-26
Front panel board schematic (008-9020A) 7-28
Front panel board parts I.D. (702-9020A) 7-29
Combo front panel parts list (702-9020A) 7-30
Encoder supply board schematic (008-9027C) 7-31
Encoder supply board parts I.D. (702-9027C) 7-32
Encoder supply parts list (702-9027C) 7-32
Instant call driver board schematic (008-9023-1G) 7-33
Instant call driver board schematic (008-9023-2J) 7-34
Instant call driver board parts silkscreen (702-9023-1G/-2J)..... 7-35
Instant call panel driver parts list (702-9023-1G) 7-36
Instant call panel driver parts list (702-9023-2J) 7-38
Instant call switch panel schematic (008-9021A) 7-40
Instant call switch panel parts I.D. (702-9021B.1) 7-41
Mini instant call panel parts I.D. (702-9024B) 7-42
Instant call switch panel parts list (702-9021B.1) 7-43
Mini instant call switch panel parts list (702-9024B.1) 7-43
Real time clock board schematic (008-9028G) 7-44
Real time clock board parts I.D. (702-9028G) 7-45
Real time clock parts list (702-9028G) 7-46
Spare parts kit parts list (951-9002F) 7-47

MODEL 25
TECHNICAL MANUAL

TABLE OF CONTENTS
(cont'd)

8. APPENDICES

Appendix A - format specifications 8-1
Motorola and G.E. tone group frequencies 8-1
Motorola and G.E. code plans 8-2
General encoding plans 8-3
Reach encoding plan 8-4
Zetron tone groups for Reach encoding 8-4
Reach code plan 8-4
5/6-tone frequencies and timings 8-5
DTMF tone pair frequencies and timing 8-5
Quick call one (two-plus-two) frequencies and timing 8-6
Digitone format 8-6
Golay sequential format 8-6

Appendix B - interfacing Model 25 to a Kustom ProKomm console.... 8-7
Method 1: direct channel keying 8-7
Method 2: momentary channel select 8-11

Appendix C - interfacing Model 25 to CAD systems 8-15
Computer-to-encoder interface 8-15
Command protocol 8-18
Computer port electrical specifications 8-20
Computer port physical specifications 8-20
Computer port communications protocol specifications 8-20
ASCII control character usage 8-21
Suggested remote control parameter programming 8-21

Appendix D - instant call labels 8-23

WARRANTY STATEMENT

Zetron, Inc. warrants that all equipment sold pursuant to any agreement shall be free from defects in material and workmanship at the time of delivery. The warranty shall extend from the time of delivery for one year. The buyer must provide written notice of any defect to Zetron within this warranty period. If the defect is not the result of improper usage, service, maintenance, or installation and if the equipment has not been damaged or modified after delivery, Zetron shall, at its option and after the buyer has returned the equipment to Zetron, 1. replace or repair the defective part or parts of equipment, 2. replace the equipment, or 3. refund the purchase price. Shipment of the equipment to Zetron's facility shall be borne on the account of the buyer.

1. Consequential Damages: Zetron shall not be liable for any incidental or consequential damages incurred as a result of any defect in any equipment sold hereunder, and Zetron's liability is specifically limited to the obligation described herein to repair or replace a defective part or parts covered by this warranty.

2. Exclusive Warranty: The warranty set forth herein is the only warranty, oral or written, made by Zetron and is in lieu of and replaces all other warranties, expressed or implied, including the warranty of merchantability and the warranty of fitness for particular purpose.

FEDERAL COMMUNICATIONS COMMISSION (FCC) REGULATIONS

This device complies with Part 15 of the FCC rules. Operation is subject to the following two conditions:

1. This device may not cause harmful interference.

2. This device must accept any interference received, including interference that may cause undesired operation.

Repair work on this device must be done by Zetron, Inc. or a Zetron authorized repair station.

COPYRIGHT NOTICE

The software in this product is copyrighted by and remains the property of Zetron Inc. Reproduction, duplication, or disclosure is not permitted without prior written consent of Zetron, Inc. No part of this document may be copied or reproduced in any form, unless otherwise stated, without the prior written consent of Zetron Inc.

TRADEMARKS

Federal is a trademark of Federal Signal.

G.E. is a trademark of General Electric.

NEC is a trademark of NEC America.

Plectron is a trademark of Butler National.

Reach is a trademark of Reach Electronics.

Touch-Tone is a registered trademark of AT&T.

Zetron is a registered trademark of Zetron, Inc.

All other product names in this document are trademarks or registered trademarks of their respective owners.

1. INTRODUCTION

Introduction 1-1

Installation precautions 1-2
Connection of the Model 25 power supply 1-2
Proper grounding of the Model 25 encoder 1-3

Application and service information 1-4

INTRODUCTION

The Zetron Model 25 Programmable Encoder is a console or rack mounted selective signaling encoder, specifically designed for use in public service and public utility dispatch centers where operators need the ability to send calls quickly and efficiently.

The Model 25 provides several innovative features. One of these features is the ability to send multiple calls over automatically selected channels by the press of a single Instant Call pushbutton. Multiple Instant Calls may be queued for transmission to quickly dispatch groups of personnel. Each Instant Call pushbutton shows its call progress via integral LEDs.

Another feature is the ability to be field programmed. Except for the purchase of additional signaling formats, it is never necessary to order changes from our factory. An optional Custom Call format allows the programming of tones and timings for custom two-tone applications such as Plectron systems. Programming may be accomplished from the keypad or more easily from a CRT or computer connected to the computer port.

Yet another feature is the RS-232 serial computer port. The port has several applications. One application is the connection of a logging printer to log all activity of the encoder. With the optional Real Time Clock, the time is also printed. Another application is the connection of a CRT or computer to remotely control the encoder. Almost anything that can be done from the keypad may also be accomplished via remote control.

As with all Zetron encoders, the advanced and reliable microprocessor design allows upgrading of the Model 25 to virtually all signaling formats used in the communications industry.

INSTALLATION PRECAUTIONS

Connection of the Model 25 Power Supply
The Model 25 Power Supply comes prewired for connection to the Model 25 Encoder. All that is required is inserting the Power Supply connector into position "P4" located on the rear panel of the Model 25.

As always, good grounding practices must be used to insure that all devices in the system are provided with a proper ground. The diagram below shows the connection of the Power Supply and location of a tie point for connection of a Console ground wire.

POWER SUPPLY CONNECTION

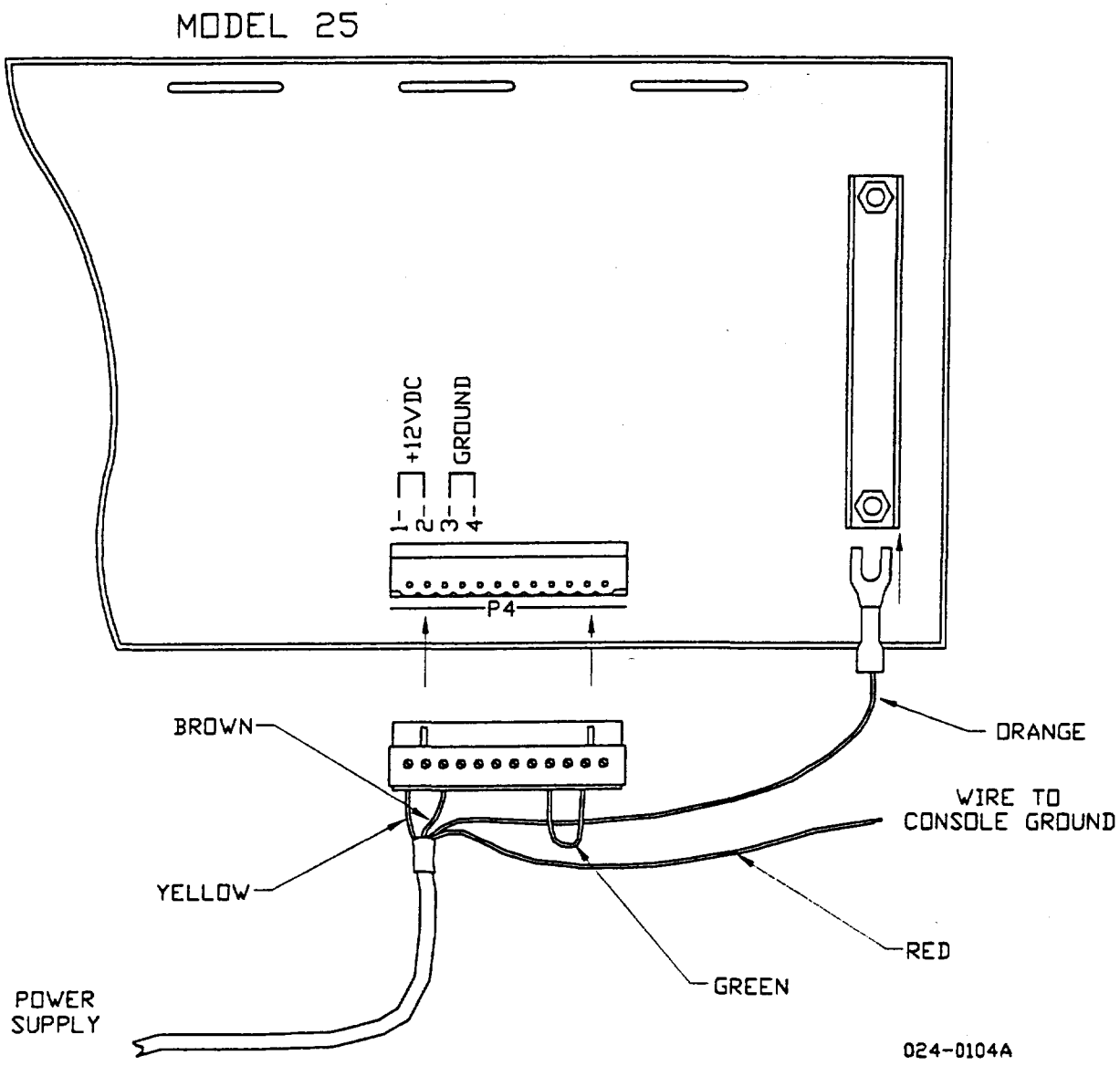

Proper Grounding of the Model 25 Encoder
Installation of the Model 25 into any Communication Console or System requires that proper grounding techniques be followed. Failure to provide the individual units with the proper "Ground Reference" could result in one or more of the following symptoms.

1.) The Unit or Units operate erratically when handled or touched, other equipment or conductive material which is electrically connected to the unit which is not grounded properly may also display this problem.

2.) The audio output levels may be unusually low. The Model 25 is capable of providing sufficient amplitude for driving most standard audio input devices. However, without the proper grounding the Encoder's audio will appear to be low or may vary over time.

3.) The Unit may appear to "Reset" unexpectedly. If a ground problem exists, variations in the supply voltage may occur. The Model 25 is equipped with a reset circuit which is sensitive to variations in the supply voltage. When this variation is detected the Model 25 may reset to insure that proper operation is maintained.

Refer to the diagram below for information on proper grounding of the Model 25.

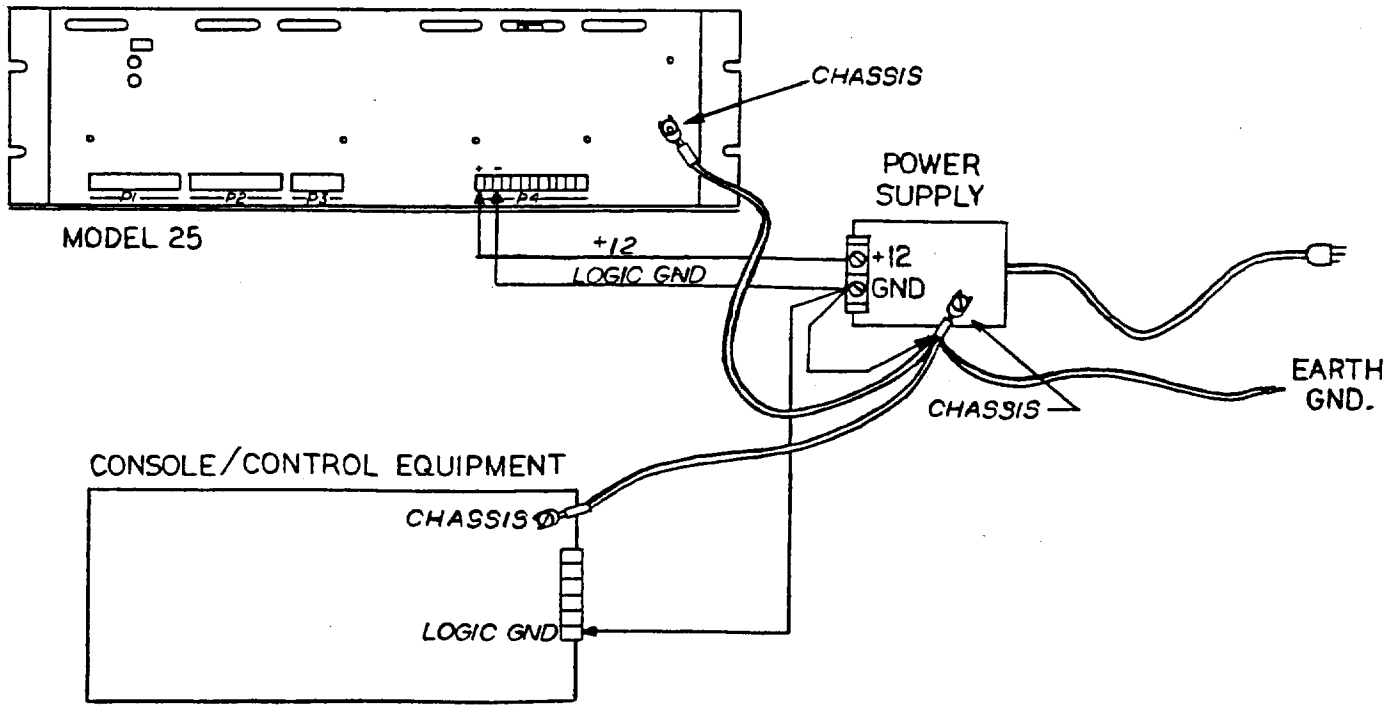

APPLICATION AND SERVICE INFORMATION

When contacting Zetron with application or service questions, it is important that you have the proper information on your Model 25 available. This consists of the following:

1. THE ZETRON "ORDER NUMBER" OR "SERIAL NUMBER" OF THE UNIT IN QUESTION – The order number is displayed on the Zetron invoice, and consists of a letter "Z" followed by four or five digits (e.g., Z12345).

   If the order number is not available, the serial number may be found on the back of the encoder and consists of either:

   a. Three digits, followed by a "-" and four more digits (e.g., 123-1234)

   b. Four digits, followed by a "-" and three more digits (e.g., 1234-123)

   Do not confuse the serial number with the Model part number, which normally starts with a "901-" prefix.

2. THE SOFTWARE VERSION NUMBER – The software version number may be determined in one of the four ways described below:

   a. Open the top of the encoder and check the label of the large EPROM ICs, U6 and U8, on the digital board. The label will have the version number (Vx.xx) printed on it. Section 4 shows the disassembly procedure.

   b. After the power-on self-test, the version number is briefly displayed on the encoder as four digits. If '0240' is displayed, then the version is V1.80. The power-on self-test will occur after power has been interrupted or when RESET is pressed to terminate the deviation test.

   c. Connect a CRT to the encoder (operating in remote control mode) and type the character 'V' (version). The version will be printed to the CRT.

   d. The "Model 25 Computer Configuration Program", available from Zetron allows the Model 25 to be programmed from an IBM compatible computer. When started, the version number of the Model 25 software will be displayed in the upper right corner of the screen. Contact Zetron Inc. for information on obtaining this optional program.

2. SPECIFICATIONS

General specifications 2-1

Special features specifications 2-2

Electrical specifications 2-3

GENERAL SPECIFICATIONS

SIGNALING FORMATS	Motorola, GE, or Reach two-tone Quickcall 1 "two plus two" Five/six-tone sequential Plectron and custom calls 2805Hz rotary dial DTMF Digitone Golay Sequential Consult factory for additional formats.
CALL CAPACITY	13 blocks of mixed formats, each block capacity is:
Two-tone	Full code plan capacity (1000 calls)
Quickcall 1	Full format capacity
Five tone	Full format capacity
Plectron/custom	200 calls total in encoder
2805/DTMF	Full format capacity (3 to 8 digits)
Digitone	Full format capacity
Golay Sequential	Full format capacity, manual message entry.

SPECIAL FEATURES SPECIFICATIONS

Display	Four 0.40" 7-segment readouts. Utilizes some alphanumeric operator messages. Low RFI non-multiplexed drive.
Channel busy LEDs	4 indicators showing status of channels.
Keyswitches	16-key "DTMF" keypad, other keys are provided for channel selection, stack editing, and alerts.
Instant Call keys	29 Instant Call keyswitches with integral LEDs used to show status. One clear key to clear the status.
Instant Call queue	16 Instant Call buttons are remembered in the sequence in which they were pressed.
Call stacks	One immediate keyboard stack plus 206 Instant Call stacks.
Alerts	5 separate Alert tones: fast siren, slow siren, beeps, high-low warble, and tone ramp.
Re-Page	The last entry or keyboard stack is again executed if the next key after a call is a SEND key.
Programming	Attributes for computer port, channels, formats, stacks and optional custom calls may be programmed.
Self-test	A limited self-test is executed while the unit is idle, extensive self-tests are executed at user discretion, and after power-up.
Expandability	Additional formats may be added to the unit in the field using a reprogrammable plug-in memory. Additional Auxiliary Instant Call panels may be added at any time.
Options	59 button, Auxiliary Instant Call panels; 24 hour, Real-time-clock; Extra Instant Call labels; Extra Instant Call red keytops; Power supply (120 VAC to 12 VDC); Spare parts kit.

ELECTRICAL SPECIFICATIONS

Frequency Range	250 to 3276 Hz
Frequency Accuracy	+/- 0.1%
Audio Output Drive	Balanced, 600 ohm impedance
Audio Amplitude Paging Output (Tone Output 1)	Adjustable, -60dBm to -10dBm (0 - 0.75 V pk-pk, into 600 ohms) (may be field altered to +7dBm maximum).
Audio Amplitude Speaker Output (Tone Output 2)	Adjustable. 3.6 Vp-p max. (.2w into 8 ohms)
Tone Distortion	3 % nominal from pure sinewave
Pre/de-emphasis	Factory set to +/- 1 dB over range, (may be field altered to +/- 6 dB per octave).
TX Controls	Audio switch: one DPDT relay P-T-T: one DPDT relay Channel select: 8 contacts, common when TX. (configuration may be field altered) All relays rated at 1A at 26 VAC.
TX Monitors	4 channel busy monitors each with high or low impedance selection. Inputs are common ground.
Computer Port	RS-232, 8 bits, no parity, 1 stop bit. Baud rate: logging, 4800 baud only; remote control, 150, 600, 4800 baud. Full duplex when in remote control. CTS "busy" input available.
Power Supply	Encoder: 11 to 14 VDC at 2.5A max, 1A standby. Auxiliary Panel: 11 to 14 VDC at 1.5A max.
Operating Temp.	0 to +65 °Celsius
Size/Weight	Encoder: 5.25" High, 19" Wide, 4.75" Deep, 5.5 lb. Aux. Panel: 5.25" High, 19" Wide, 2.25" Deep, 3.5 lb.

3. DETAILED OPERATION

Front panel description, encoder with keypad 3-1

Front panel description, instant calls 3-1

Status description, encoder with keypad 3-2

Status description, instant calls 3-2

Power-on 3-4

Keypad (manual) operation 3-5
- The keyboard stack (the ENTER key) 3-6
- Clearing an entry (the CLEAR ENTRY key) 3-6
- Sending a call (the SEND keys) 3-6
- Sending live calls 3-7
- Generating alerts (the ALERT key) 3-7
- Displaying the time (the '*' key) 3-8
- Accessing call stacks 3-8

Instant call operation 3-8
- Instant call key numbering 3-10

Remote control operation / call logging 3-11
- Call logging 3-13

Setting the time clock 3-15

Causes for error beeps 3-16

The calling sequence 3-18
- The control relays 3-18
- Channel busy monitoring 3-18
- Keying method 3-20
- Calling sequence summary 3-20

Relay timing diagram 3-25

FRONT PANEL DESCRIPTION, ENCODER WITH KEYPAD

ITEM	DESCRIPTION
STATUS DISPLAY	The 4-character status display shows the current status of the encoder. If the time is being displayed, the middle decimal point is illuminated.
16-KEY PAD	These keys are used for manual entry of encoding information such as a call number. The '*' key is used to cause the time to be displayed (if equipped with clock).
CHANNEL SEND KEYS	These keys are used to manually begin transmission on one of 4 sets of channels via the 8 control relays.
CHANNEL BUSY INDICATORS	The LEDs next to the SEND keys indicate the busy status of the channels controlled by the adjacent key.
ENTER KEY	This key is used to enter a key sequence such as a call number, into the keyboard stack.
CLEAR ENTRY KEY	This key is used to clear the previous key sequence or remove the last entry from the keyboard stack.
ALERT KEY	This key causes one of 4 alert tones to be generated while the key is depressed.
RESET KEY	This key is used to clear the encoder of pending or current transmissions, and to clear all Instant Call key indicators. After pressing this key the encoder is in the idle state.
COMPUTER PORT	This DB9 RS-232 connector socket is used to connect the encoder to a printer, CRT, or computer for call logging, remote control, or programming.
BEEPER	The annunciator hidden behind the panel is used to indicate operator error or completion of a call sequence.

FRONT PANEL DESCRIPTION, INSTANT CALLS

INSTANT CALL KEYS	These keys allow a single keystroke to send pre-programmed call sequences over pre-programmed channels.
INSTANT CALL STATUS INDICATORS	Each Instant Call key has an integral LED used to show the status of the call stacks which the key represents.
INSTANT CALL CLEAR KEY	The lower right-hand key allows for clearing of the panels Instant Call status LEDs.
INSTANT CALL SEND QUEUE KEY	The lower left-hand key (when enabled) allows for the Instant Call keys to be reviewed before sending.

STATUS DESCRIPTION, ENCODER WITH KEYPAD

DISPLAY	DESCRIPTION
"- "	This is the cleared display indicating that the encoder is in the idle state awaiting encoding commands.
"XX.XX"	The hours and minutes of the 24 hour time is displayed when idle (instead of "- ") if the encoder is equipped with the time clock. The decimal point means time is displayed.
"- " flashing	The keyboard stack contains one or more key sequences (call numbers). The keyboard stack will automatically clear after 30 seconds if no more keys are pressed.
"bUSY" flashing and beeping	This displays during a call sequence if the requested channel is busy. If the channel remains busy for over 30 seconds, then the encoder will give up the attempt to send. The call(s) may be forced to send by pressing any of the send keys.
"XXXX" flashing	The last four digits of the last call sent is flashed after a calling sequence to indicate that the last stack may be re-sent by pressing a SEND key. The encoder is in the idle state and any key other than a SEND key will be processed normally. The display will stop flashing and the ability to re-send the last call will be lost if more than 30 seconds elapse or if a key other than a SEND key is pressed.
"dAtE" flashing	This indicates that the encoder is in the clock set mode. This will occur automatically at power-on if the clock option is installed and the time/date needs setting.
"ErrX" flashing and beeping	This indicates that the encoder detected a fault during its limited idle state test or during the comprehensive operator-initiated self test. The error number, "X", indicates the area of fault.

STATUS DESCRIPTION, INSTANT CALLS

LED on	The call stack is in the panel's call queue, or is being processed by the encoder.
LED blinking	The call stack has been sent over the air by the encoder.
CLEAR key LED on	The panel is in the clear mode. Any key pressed while in clear mode will cause the LED of the pressed key to turn off. If the call is still in the call queue, it will be removed. Press the CLEAR key again to exit clear mode.
SEND QUEUE key LED on	The panel's queue is currently being sent to the encoder for call processing (SEND QUEUE is used only if enabled).
SEND QUEUE key LED off	Keys pressed enter the call queue, but the queue is not sent to the encoder until the SEND QUEUE key is pressed.

The Model 25 Programmable Encoder may be ordered in one of two configurations. One of these configurations (901-9019) is equipped with a keypad and display, allowing for manual and backup operation. The keypad-equipped configuration also contains 29 Instant Call keys. The other configuration (901-9022) contains 59 Instant Call keys but no keypad or display. The front panel of the encoder without keypad looks identical to that of the Auxiliary Instant Call panel (901-9020).

In the following discussions on operation, references to 'status display', 'encoder display', 'display', 'keyboard', or 'keypad' only pertain to the encoder configuration that is equipped with these items (901-9019). Also references to 'time' or 'time clock' only pertain to encoders equipped with that option.

There are two basic modes of operation for the Model 25 encoder; remote control and instant call modes. In remote control mode, input is accepted in ASCII from the RS-232 compatible Computer Port, but the Instant Call panels are disabled. In instant call mode the Instant Call panels are enabled but remote control is inhibited. Selection of the mode depends on the level present on the 'remote control' signal of the Computer Port connector. In either of the modes, the keypad may either be enabled or disabled depending on the position of the keypad jumper inside the enclosure. At all times, the status of the encoder is being displayed on the front panel and if call logging is enabled outputted in ASCII via the Computer Port for possible printing.

POWER-ON

When power is applied to the Model 25 it automatically begins an extensive self test. While the encoder is testing, the LEDs of the encoder and all attached Instant Call panels will be illuminated. The illumination of each LED allows an operator to verify their operation.

If a fault is found during the self test then the encoder will display an error number ("Errx") and begin beeping until it is reset. If an Instant Call panel finds a fault during the test it will illuminate some indicators, one of which will be the LED of the CLEAR key (lower right-hand key). See the Repair Section to interpret the error indications. The Repair Section also contains information on using the self test at times other than power-on.

After the power-on self test has successfully completed, the display of the front panel will clear, displaying a single dash on the left ("- "). The cleared display indicates that the encoder is in the idle state awaiting entry of encoding information. While in the idle state, the encoder is executing a limited self test. Faults found in the limited self test are indicated the same way as in the full self test. The four channel busy indicators will always indicate the busy status of the connected channel busy inputs unless the encoder is in a programming or test mode.

After long power losses in encoders equipped with time clocks, the date may need to be set. If the clock needs setting then the display will flash the word "dAtE" while beeping. The operation of setting the clock may be skipped by pressing RESET. For instructions on setting the clock, see the subsection "Setting the Time Clock". In encoders equipped with the clock, the hours and minutes of the current time will automatically be displayed 30 seconds after the encoder enters the idle state. Also, if a logging printer is connected to the Computer Port, the time and date will be printed every hour.

NOTE: Before proceeding with operation, the Model 25 must be programmed if this has not yet been done. As shipped from our factory, the Model 25 is not programmed. Programming must be performed only by qualified personnel knowledgeable in the details of the particular communications system. Once programmed, the Model 25 will retain its memory, even during power failures, until re-programmed.

KEYPAD (MANUAL) OPERATION

NOTE: If desired, the keypad may be disabled by placing the keypad jumper inside the enclosure to the 'disabled' position (see Installation Section).

To enter encoding information use the 16-key pad. As digits are accepted from the keypad they will appear in the display filling in at the left-hand display first. There are two displayed characters that are somewhat cryptic in their appearance due to the seven segment displays. The '#' character is displayed as three horizontal lines, " ≡ ". The '*' character is displayed as a 'degree' symbol, " ° ". As the display fills, new accepted digits will enter on the right-hand display while the previous display scrolls to the left. Entries that are not acceptable will cause an error beep and they will not appear in the display. If the encoder fails to receive keypad input for more than 30 seconds it will re-enter the idle state displaying either the time or the single dash. When this happens, the previous keystrokes are lost.

The first digit entered is the block or leading digit which is used to steer the encoder to one of up to 13 formats or the call stack. The possible format leading digits are "1" through "D". The leading digit for accessing call stacks is "0". If the attempted leading digit is not accepted it is because the block represented by the leading digit has not been assigned to an encoding format. After initialization, the leading digits 1, 2 and 3 are accepted to allow use of the alert feature.

After the leading digit, the remaining digits are information used by the chosen encoding format. Digits that are not accepted by the format will cause a beep. A beep may also be caused by attempting to enter more digits than are allowed by the chosen encoding format. The following table shows the required input for each of the formats supported by the Model 25. Note that the leading block digit 'b' must be in the range 1-9, A, B, C, or D. The actual block digit used to access the given format depends on the programming. The leading block digit '0' is reserved for accessing the call stacks.

FORMAT	REQUIRED ENTRY	NUMBER RESTRICTIONS
CALL STACK	0nnn	nnn= 000-358
1000 CALL TWO TONE	bnnn	n= 0-9
CUSTOM CALL	bnnn	nnn= 000-199
QUICK CALL 1 (2+2)	bnnnn	n= 0-9, A or B
5 TONE SEQUENTIAL	bnnnnn	n= 0-9
6 TONE SEQUENTIAL	bnnnnnn	n= 0-9
STORED DTMF	bn - bnnnnnnnn	n= 0-9, A-D, # or *
LIVE DTMF	b	digits sent as entered
STORED ROTARY DIAL	bn - bnnnnnnnn	n= 0-9
LIVE ROTARY DIAL	b	digits sent as entered
AUTOMATIC ALERT	bn	n= 0-3

After the encoding information (call number) has been entered it may either be accumulated into the keyboard stack, sent immediately, or in the event of an entry error, erased.

The Keyboard Stack (The ENTER Key)
The keyboard stack provides a means of accumulating several calls prior to sending any of them. This is useful in making best use of the channel air time or for sending the same call sequence over more than one channel.

To place a key sequence (call number) into the keyboard stack press the ENTER key. If pressing the ENTER key causes an error beep, then more information is needed by the chosen encoding format, and more digits must first be entered. If the call number is accepted into the stack then the display will show a blinking dash. The blinking dash indicates that the keyboard stack contains an entry. Attempts to enter invalid key-sequences (such as live format blocks or the instant call block) will result in an error beep and several blinks of the display after which the number will be cleared. Over 100 total keystrokes (including ENTERs) may be placed in the keyboard stack before it must be sent. If a double beep occurs when the ENTER is pressed then the keyboard stack is full. When this happens the last call number will not be placed into the stack but the keyboard stack and this last un-enterable call number may be sent by pressing a SEND key.

Clearing an Entry (The CLEAR ENTRY Key)
The CLEAR ENTRY key can be used to erase a key sequence before or after it has been entered into the keyboard stack. If digits are displayed while the CLEAR ENTRY key is pressed then the last key sequence is erased and the display will clear ("- "). If the display is clear but the keyboard stack contains key sequences, then pressing CLEAR ENTRY will cause the last key sequence to be displayed and removed from the stack. Pressing CLEAR ENTRY once again will clear the display. This process may be repeated until the keyboard stack is completely erased. If pressing CLEAR ENTRY caused a beep then the keyboard stack is empty and there are no key sequences to clear. A convenient way to erase the entire keyboard stack is to press RESET.

Sending a Call (The SEND Keys)
Pressing a SEND key causes the last unstacked call code to be forced into the keyboard stack (if acceptable) even if the double beep indicated it was full. All call numbers sent over the manually chosen channel are taken from the keyboard stack in the order in which they were entered (first call number ENTERed is the first call sent). Prior to sending, the encoder may monitor the channel's busy signal. If a channel's busy signal is used and it indicates busy then the encoder will inhibit transmission until either the channel becomes clear or until the SEND key is again pressed. For up to 30 seconds, the encoder will beep and flash the word "bUSY" after which the attempt to send will be abandoned. Once the transmission begins, it may be canceled only by pressing the RESET key. After the send sequence is complete, the display will rapidly blink the last four digits of the last call number sent. These blinking digits in the display indicate that the keyboard stack may again be sent on the same or different channel by pressing the SEND key for the desired channel. After 30 seconds the display will stop blinking and the ability to re-page the keyboard stack will be lost. Even though the display is not cleared after a send, the encoder is still in the idle state and new encoding information may be entered as described previously.

Sending Live Calls
The live formats (live DTMF or live ROTARY DIAL) allow the encoding tones to be sent as each digit is pressed. To initiate a live call, first select the leading digit of a live format then press a SEND key. Live format blocks may not be entered into the keyboard stack. After the key-up sequence the encoding may begin by manually pressing the desired keypad digits. Transmission may be halted by pressing the CLEAR ENTRY key or by allowing the five second key stroke time-out to expire. Sending live formats from remote control is not possible.

Generating Alerts (The ALERT Key)
Four separate alert tones may be generated from the tone output of the encoder by using the ALERT key. The selection of an alert tone is shown in the following table.

Display clear and ALERT pressed	1206 Hz tone
1 pressed then ALERT pressed	Slow siren
2 pressed then ALERT pressed	Fast siren
3 pressed then ALERT pressed	Hi/Lo warble

The alert tones will be sent as long as the ALERT key is held down. While the alert is being sent the PTT and audio relays close but none of the 8 control relays will close because the alert function is meant to key the channels already selected on the console. After the alert, the display will clear. Unacceptable alert key sequences will cause an error beep.

An automatic customized alert is available that may be placed in a stack along with other calls. The automatic alert is actually a format that is already resident in the encoder but it must be enabled via programming before it may be used. The automatic alert format will generate the same alert tones as the ALERT key with two exceptions; the tone ramp alert is only available from the alert tone format, and instead of the steady 1206 Hz tone, the alert format will generate a series of beeps. The number of beeps, the frequency of the beeps, the beep duration and the inter-beep gap are all programmable parameters of the auto-alert format. The auto-alert format is accessed by keying-in the block number of the format followed by a single digit which specifies the type of alert. The alert then may either be sent by pressing a SEND key, or stacked with other calls by pressing the ENTER key. The alert-type digit must be one of the following:

KEY	ALERT TYPE
0	Programmable beeps
1	Slow siren (same as generated by ALERT key)
2	Fast siren (same as generated by ALERT key)
3	Hi/Lo warble (same as generated by ALERT key)
4	Tone ramp

Displaying the Time (The '*' Key)
Normally the time will automatically be displayed 30 seconds after the encoder becomes idle. However, while the display is clear or after a calling sequence the hours and minutes of the 24 hour time may be displayed immediately by pressing the '*' key. Once initiated, the time will continuously update in the display until a key is pressed. While the time is displayed, the middle decimal point of the display is illuminated. When the time displays, any previous keystrokes are lost.

Accessing Call Stacks
As a standard feature, the Model 25 contains 206 programmable call stacks, one call stack for each of the possible 206 Instant Call buttons. A call stack is specified by a four digit number which always starts with a leading digit of '0'. The remaining three digits specify which of the call stacks to access. Since the numbering of the call stacks match the numbering of the Instant Call keys, the 206 call stacks are not numbered sequentially. Details on Instant Call key numbering may be found in the next subsection on Instant Call operation. The valid call stack number ranges are: 000-004, 010-014, 020-024, 030-034, 040-044, 050-053, 100-158, 200-258, 300-358.

Stacking of call stacks is not allowed. To send a call stack press a SEND key. If the call stack number is out-of-range or unprogrammed (contains no key-strokes) then an attempt to send will cause the stack number to blink and the beeper to sound.

INSTANT CALL OPERATION

NOTE: In order for the Instant Call panels to operate, the encoder must be in the instant call mode of operation (see Installation Section).

The Instant Call panel system consists of an Instant Call panel inside the encoder enclosure and any additional Auxiliary Instant Call panels in separate enclosures. All panels communicate to the encoder via a RS-232C serial loop. When an Instant Call key is pressed, a key address is generated and sent to the encoder. The key address contains the panel, row and column location of the key, and accesses one of the 206 call stacks. An Auxiliary panel may be configured with one of three addresses. The panel address may be the same as, or different than, other panels. If two or more panels are addressed the same, then their keys and status LEDs will operate in parallel.

To prepare Instant Calls, merely press the desired Instant Call key or keys. Each key, when pressed, generates a position number that corresponds to one of 206 call stacks. Up to 16 calls may be queued per panel even while one call is being sent. When the key has been pressed the integral status LED will illuminate indicating that the key number has been entered into the queue. If a LED does not illuminate when its key is pressed then it may be because the key was pressed too lightly or because the queue was full. The key's call stack will not be sent unless its status LED illuminates.

If the review-before-send option is disabled then sending will begin as soon as the first Instant Call key is pressed. If the review-before-send

option is enabled then sending of the queued Instant Calls will occur only when the originating panels SEND QUEUE key (lower left Instant Call key) is pressed. When the SEND QUEUE key starts a transmission, its LED will turn on and will stay on until the queue becomes empty. Call stacks that are not sent because they are unprogrammed will cause the LED to turn off completely and the encoder to beep. Once an Instant Call begins, any keystrokes entered from the encoder's keypad, including the keyboard stack, are lost. However, calls initiated from the keypad already in progress will not be disturbed. As the Instant Call queue is sent, it is sent in the order that the keys were pressed (first one pressed is the first one sent). The call stack number (same as Instant Call number) displays briefly as it begins. As the calls in the call stack are sent their numbers also are displayed.

If during transmission the encoder begins to beep repeatedly then the channel needed by the call shown in the display is busy. To force the transmission, press the any Instant Call key that has its indicator fully on. If the desired channel remains busy for over 30 seconds then the individual call of the call stack will be skipped over.

After the call stack is sent, the encoder will beep and the LED of the Instant Call key will begin blinking. Note that the blinking action will also be taken on the LEDs of any parallel addressed panels as well. Blinking indicators will continue to blink until cleared using the panel's CLEAR key (lower right key) or the RESET key on the encoder. The RESET key of the encoder will cause all Instant Call status LEDs on all panels to go out immediately. The operation of the CLEAR key depends on the position of the clear key jumper at the back of the Instant Call panel. In the 'all' position the CLEAR key, when pressed, will cause all of the panels status LEDs to turn off immediately. When this is done any Instant Call not yet initiated will be canceled. In the 'selective' position, the CLEAR key, when pressed, will illuminate its LED indicating that the panel is now in the clear mode. While the encoder is in the clear mode any key pressed on the panel will cause that key's LED to turn off. When the CLEAR key is again pressed its LED will go out indicating that the panel is no longer in the clear mode.

Instant Call Key Numbering

The Model 25 system allows the connection of up to three full sized Instant Call panels for a total of 206 individual Instant Call keys. The total panel count, however, is not restricted to three since two or more Auxiliary panels may be configured to operate in parallel (same panel address).

Each Instant Call key represents a call stack via a four digit position dependent number. The number generated by each key is in the form '0prc'. The meaning of each digit is:

'0' leading digit used to access the stack block,
'p' panel number on which the key resides,
'r' row number of the key,
'c' column number of the key,

The number for the Instant Call panel inside the encoder enclosure is '0' for the half sized panel of the encoder with keypad (901-9019) and '1' for the full sized panel of the encoder without keypad (901-9022). The panel number of the Auxiliary Instant Call panels depend on the placement of the address jumper at time of installation. The possible panel numbers for the Auxiliary panels (901-9020) are '1', '2', and '3'.

Rows on a panel are numbered from 0 to 5 with 0 being the top-most row and 5 being the bottom-most row. Columns on full sized panels are numbered from 0 to 9. Columns on half sized panels are numbered from 0 to 4. The left-most column is always column 0.

The lower right hand key (0054 or 0p59) of each panel is reserved as that panel's CLEAR key. If the review-before-send option is enabled then the lower left hand key (0p50) is reserved as the SEND QUEUE key. The reserved keys generate no position number when pressed. A map of the Instant Call key numbers is shown below:

```
--- HALF SIZE PANEL ----
0000 0001 0002 0003 0004
0010 0011 0012 0013 0014
0020 0021 0022 0023 0024
0030 0031 0032 0033 0034
0040 0041 0042 0043 0044
0050 0051 0052 0053 0054
SEND                CLEAR
QUEUE

--------- FULL SIZE PANEL (p=1, 2 or 3) ---------
0p00 0p01 0p02 0p03 0p04 0p05 0p06 0p07 0p08 0p09
0p10 0p11 0p12 0p13 0p14 0p15 0p16 0p17 0p18 0p19
0p20 0p21 0p22 0p23 0p24 0p25 0p26 0p27 0p28 0p29
0p30 0p31 0p32 0p33 0p34 0p35 0p36 0p37 0p38 0p39
0p40 0p41 0p42 0p43 0p44 0p45 0p46 0p47 0p48 0p49
0p50 0p51 0p52 0p53 0p54 0p55 0p56 0p57 0p58 0p59
SEND                                        CLEAR
QUEUE
```

REMOTE CONTROL OPERATION / CALL LOGGING

NOTE: The 'remote control' signal of the Computer Port connector must be at the proper level before remote control is attempted. While in remote control mode the Instant Call panels are disabled. The encoder keypad and display, however, may still function in parallel if so desired.

Remote control operation allows remote access to all encoder functions. Compatible ASCII RS-232 serial devices such as CRTs, printers or computers may be attached to the Model 25 via the DB9S computer port connector. In addition to the normal receive and transmit signals, the Computer Port also supports a Clear-To-Send (CTS) signal which may be used to indicate that the attached device is not ready to accept encoder output. CTS would commonly be used to connect to a printers 'busy' signal for call logging.

The Computer Port uses a common asynchronous serial communications protocol. The port transmits and receives at full duplex using 8 bits with 1 stop bit and no parity bit. Normally the most significant bit of the 8 bits is zero. Several other communications parameters are programmable. The programmable remote control parameters are:

PARAMETER	DESCRIPTION
BAUD RATE	4800, 600 or 150 baud,
NEW LINE NULLS	1 to 255 ASCII NUL characters may follow every carriage return character sent by the encoder,
BELL USE	The ASCII BEL character may be enabled or disabled to work in parallel with the encoders beeper,
CTS USE	The monitoring of the Clear-To-Send (busy) signal is optional,
CTS POLARITY	The polarity of the CTS signal is selectable.
LOGGING ENABLE	The output of call logging and status information via the computer port may be turned on or off.

The operation of the encoder from a remote control device is nearly identical with the operation from the encoder's keypad/display with a few changes and added commands. Sending of live formats is not possible from a remote control device. Encoder action is controlled by a single ASCII character which usually has an equivalence to an encoder keypad key. When controlling the encoder remotely, the supported ASCII characters are:

CHARACTER	ASCII HEX CODE		OPERATION
0 - 9		30 - 39	same as keypad 0 - 9,
A - D		41 - 44	same as keypad A - D,
*		2A	same as keypad *,
#		23	same as keypad #,
!		21	same as keypad ALERT except the alert time is always 3 seconds,
LINE FEED	control-J	0A	same as keypad ENTER,
CANCEL	control-X	18	same as keypad CLEAR ENTRY,
(FS)	control-	1C	same as keypad SEND 1,
(GS)	control-]	1D	same as keypad SEND 2,
(RS)	control-	1E	same as keypad SEND 3,
(US)	control-_	1F	same as keypad SEND 4,
BREAK for 1 second			same as keypad RESET,
RETURN	control-M	0D	special send character,
T		54	print date and time,
V		56	print software version number,
S		53	print channel busy status,
P		50	main menu

Call Logging

The status of the encoder is continuously outputted in ASCII characters via the Computer Port if call logging is enabled. This is true whether the encoder is in instant call or remote control mode. If in remote control mode the programmed remote control parameters are in effect. If in instant call mode then the baud rate is always 4800, only 1 NUL is sent after carriage returns, the BEL character is not used, and CTS is ignored. The encoder status output, in addition to providing a call history, also provides a key stroke history of actions taken from the keypad or remote control device. The following table shows the ASCII output versus keypad or remote control input.

KEYPAD INPUT	REMOTE ASCII INPUT	ENCODER ASCII OUTPUT
0 - 9	0 - 9	echoes input
A - D	A - D	echoes input
#	#	echoes input
*	*	echoes input
ENTER	LINE FEED (control-J)	' (apostrophe)
CLEAR ENTRY	CANCEL (control-X)	/ (slash)
ALERT	!	-----ALERT-----
RESET	BREAK for 1 second	---- RESET ----
SEND 1	(FS) (control-)	---------SEND 1
SEND 2	(GS) (control-])	---------SEND 2
SEND 3	(RS) (control-)	---------SEND 3
SEND 4	(US) (control-_)	---------SEND 4
------	RETURN (control-M)	---------SEND 0 (see note below)
------	T (time) example:	05/18/1984 13:35:56 (MAY 18, 1984)
------	V (version) example:	-VERSION 1.00- (software version 1.00)
------	S (status) example:	BUSY :----4--1 (channels 4 & 1 busy)
------	P (main menu)	

When the encoder is awaiting a new command such as a call number it displays the ASCII prompt ">". Usually if a key sequence causes an error then a question mark "?" is printed from the port. In addition to the output shown in the above table, the encoder frequently makes use of several unprintable ASCII characters; ENQ (ASCII HEX 05), NUL (ASCII HEX 00), BEL (ASCII HEX 07), LF (ASCII HEX 0A), CR (ASCII HEX 0D), ACK (ASCII HEX 06), NAK (ASCII HEX 15), EOT (ASCII HEX 04) and SOH (ASCII HEX 01). When in continuous test mode the encoder also sends an ESC (ASCII HEX 1B).

A carriage return (return) sent to the encoder is a special send character. The use of carriage return allows calls to be sent using the instant call control relays programmed against their block number or custom call number. This is very similar to sending using an Instant Call button. The other send characters will send calls using the control relays programmed against their SEND keys.

When the encoder begins a send sequence it outputs an ASCII call history that shows the send number used to originate, the busy status, the control relays used, the beginning time, each call number in the calling stack, and the ending time. The following table describes an example call history.

---------SEND 1	Send #1 was origination,
RELAYS:---5---1	Control relays 5 and 1 were used,
BUSY	Channel was busy at start, but became unbusy,
13:47:50	24 hour time at start where PTT closes,
2123	1st call, block 2, number 123,
4A2B4	2nd call, block 4, number A2B4,
512345	3rd call, block 5, number 12345,
6678901	4th call, block 6, number 678901,
9000	5th and last call, block 9, number 000,
2 ---ALERT-----	Last call was custom call using alert #2,
13:48:26	24 hour time where call ended,
---------------	Bar distinguishes call history from key-stoke history.

The above example showed a case where the channel was busy at the start, but became unbusy prior to the 30 second busy timeout. If the channel had remained busy for the 30 second timeout then the call would not have been sent and the call history would have looked like this:

---------SEND 1	
RELAYS:---5---1	
BUSY OUT	
13:48:20	Time after busy time out.

With the time clock option, the encoder also outputs the date and time in ASCII every hour.

SETTING THE TIME CLOCK

When power is first applied to an encoder equipped with the 24 hour time clock option, the encoder will automatically enter the clock set mode. When the clock set mode is entered, the encoder will beep and flash the word "dAtE". If a printer or CRT is attached, the print-out will show the words "SET CLOCK". This message means that the time and date should be set, otherwise the call log will show incorrect time and date. The clock board is equipped with batteries that will maintain the clock setting during short-term power losses. However, if power has been removed for an extended period of time, then the batteries may deplete and the next time power is applied, the encoder may again enter the clock set mode. Normal operation may be resumed while in the clock set mode by pressing the RESET key. If this is done then the time and date will not be correct. The batteries are automatically recharged when power is applied.

While the clock batteries are charged, the clock will need setting only to compensate for daylight savings time shifts. The clock will automatically compensate for months of different length and leap years.

When clock changing is required, the clock set mode may be entered via the keypad by holding down the RESET key then holding down the '*' key and releasing the RESET key. When the encoder display shows "PrOG" then the '*' key may be released. From a CRT the clock set mode may be entered by typing the character 'P' followed by the character '*'. If the encoder powers-on with the display flashing the word 'dAtE' then the encoder is already in the clock set mode.

Once in the clock set mode the encoder will flash the word "dAtE" until the '*' key is pressed (same key on a CRT) at which time the first prompt will be issued. In order to complete the clock setting cycle, the month, day, year, hours, and minutes must be entered in that sequence. Each item requires exactly two digits to be entered. The following table shows the required input for each prompt.

PROMPT	DESCRIPTION	REQUIRED REPLY
nn _ _	Enter month	01 - 12
d _ _	Enter day	01 - 31
Y _ _	Enter last two digits of the year.	00 - 99
H _ _	Enter hour (24 hr format)	00 - 23
nn _ _	Enter minutes	00 - 59

As soon as the last digit of the minutes is entered, the clock is set with the seconds at zero. The encoder will again be in the normal operating mode (idle state) awaiting call instructions.

CAUSES FOR ERROR BEEPS

The following is a list of causes for error beeps from the Model 25 encoder during normal operation or calling sequences.

Single beep, display not blinking

- At end of call stack:
This is normal and is used to indicate the end of a calling sequence.

- While remotely controlling:
The controlling device has sent an invalid command to the encoder or perhaps the baud rate is wrong.

- When leading block digit pressed:
The block has not been programmed
OR the block is disabled via programming.

- When call number is pressed:
The character is not acceptable for the format chosen by the leading digit
OR the chosen format already has the maximum number of digits.

- When ALERT key pressed:
The number in the display is greater than three.

- When CLEAR ENTRY key pressed:
The display is blank AND the keyboard stack is empty (nothing to clear).

- When ENTER key pressed:
The number entered represents a call stack (block 0) OR
the display is blank (nothing to enter) OR
there are less than the minimum number of digits for the chosen format.

- When SEND key pressed:
The last key sequence has less than the minimum number of digits for the chosen format.

Double beep, display not blinking

- When ENTER pressed:
The keyboard stack is full. The keyboard stack and the last key sequence may be sent by pressing a SEND key.

- During a call sequence while sending a call stack:
The number displayed is invalid. This could only happen through a mistake in programming the call stack.

Single beep, display blinking

- When ENTER key pressed:
The format attempted to enter is live OR
the prior key sequence is invalid for the chosen format.

- When SEND key pressed:
The prior key sequence is invalid for the chosen format.

Periodic beeping

- During call sequence:
The selected channel is busy as indicated by the display. Press the sending key again to force the transmission or wait for the channel to become clear. If the channel remains busy the encoder will give up after 30 seconds.

- During idle state or testing:
The encoder has detected a fault condition. The display will also blink "Errx" to indicate the origin of the fault (see Repair Section).

THE CALLING SEQUENCE

The calling sequence involves the keying of the audio, PTT, and control relays as well as the sampling of the channel busy inputs and the generation of tones. There are several programmable parameters which are helpful in tailoring the calling sequence to particular applications. At the end of this subsection is a relay timing diagram that also shows the relay keying sequences.

The Control Relays

Aside from the PTT and audio relays, there are eight control relays that are generally used to select the channel on which to send. Typically during a calling sequence one of the eight control relays would be used to select a single channel. If the connected console allows, the control relays may be used to key two or more channels for a 'simulcast' or 'simulselect'.

The control relays used during a call sequence are determined by the key pressed to begin the sequence. If one of the four SEND keys are used to start a calling sequence, then the channel(s) used during the sequence are determined by the SEND key pressed. The channel(s) used by a SEND key is specified by programming.

When sending calls using the Instant Call keys (or using the RETURN character if in remote control) the control relays used are determined by the block or custom call number of the call being sent at the moment. When an Instant Call key is used each call of a call stack may be sent on a different channel. This allows a single key to dispatch all personnel needed for a particular event even though they may be listening to different channels. The channel(s) used by each block or custom call, is specified by programming.

Channel Busy Monitoring

There are four channel busy inputs, one associated with each SEND key. The LEDs adjacent to the SEND keys show the busy state of that key's busy input. Each key may be programmed to either ignore or monitor its channel busy input. If a key's busy input is ignored then sending via that key will proceed regardless of the state of its busy input.

If a key's busy input is monitored then sending via that key will be inhibited while the input indicates busy. If an input is at the busy state and the associated SEND key is pressed then the encoder will start a 30 second time-out during which the encoder will beep and blink the word "bUSY". If prior to the timeout, the input becomes clear or the SEND key is again pressed, then sending will proceed immediately. If the time-out expires then the encoder will give up the attempt to send the keyboard stack. The PTT or audio relays will never close unless a call is sent.

When the Instant Call keys are used to send a call or stack of calls, the channel busy inputs used depend on the control relays programmed against the calls to be sent. The inputs used are the inputs of the SEND keys whose control relays in any way match the control relays that are used by the call being sent. The following example may be helpful:

This table shows the control relays programmed against each of the four SEND keys. The channel busy input number for a SEND key always matches the number of the SEND key.

SEND key	Control Relays Programmed	Channel Busy Input Used
1	- - - - - - - 1	1
2	- - - - - - 2 -	2
3	- - 6 - - 3 - -	3
4	- - - 5 4 - - -	4

This table shows calls from blocks 2, 5 and 9 and the control relays programmed against them. Block 9 must be the custom call block since each of its calls has different relays programmed against them. The channel busy inputs used are found from the control relays programmed against both the calls listed and the SEND keys.

Call Number	Control Relays Programmed	Channel Busy Inputs Used
2123	8 - - - - - - -	none
500000	- - - - - - - 1	1
9001	- - 6 - - - 2 -	2 and 3
9002	- - - - - 3 - 1	1 and 3
9003	- - - 5 4 - - -	4

This shows how the busy input is found for call number 9001. Note that relay 2 matches a relay programmed for SEND 2. Relay 6 matches a relay programmed for SEND 3. Therefore channel busy inputs 2 and 3 are used. This call will be sent if the level of inputs 2 and 3 are either ignored or not busy. If either input is busy the call will be inhibited.

	Control Relays Programmed	
Call 9001	- - 6 - - - 2 -	
SEND 1	- - - - - - - 1	
SEND 2	- - - - - - 2 -	X <---- input 2 is used
SEND 3	- - 6 - - 3 - -	X <---- input 3 is also used
SEND 4	- - - 5 4 - - -	
	X X	<---- these relays match.

Keying Method
Two methods are available for keying transmitters. This option is programmable. One method is called Direct Channel Keying. Using this method the keying of one or more channels is directly controlled by the eight control relays and the PTT relay. The control and PTT relays close nearly simultaneously and both sets will remain closed while the call is being sent.

The other method is called Momentary Channel Select. Using this method the selection of one or more console channels may be performed prior to sending a call. After the call is sent the channels used for the send will remain selected for the voice message that may follow. Using this method the control relays momentarily pulse a selecting signal to the console just prior to sampling the channel busy and closing the PTT. None of the control relays are closed while the call is being sent.

With either method there is a programmable key-up delay for the period between the closure of PTT and the generation of tones.

Calling Sequence Summary
The rest of this subsection is a summary of the calling sequences. The calling sequences generated by SEND keys are different from sequences generated by Instant Call keys. Note the use of the words 'display' and 'print'. In these summaries 'display' refers to displaying on the encoder status display, 'print' refers to outputting from the Computer Port to a printer or CRT. Also capitalized words that follow an arrow, -->, refer to yet another operation that is broken down further in the paragraphs that follow.

SEND GENERATED

1. Display "SEnd"
   Print the send number
   Print the programmed control relays to be used

2. Momentary channel select mode?
   :Yes --> MOMENTARY SELECT
   :No --> DIRECT KEYING

3. Is channel busy used and has it been busy for over 30 seconds?
   :Yes - Skip to step 7.

4. Print time (if time clock installed)

5. Is call stack empty?
   :No - Get next call from call stack
   Display call number
   Print call number
   Is call valid?
   :No - Print "?"
   Issue two beeps
   Go back to step 5.
   :Yes - Close audio relay
   Wait 100 milliseconds
   Generate encoding tones
   Wait the programmed inter-page gap (stack delay)
   Go back to step 5.

6. Is last call a custom call with alert?
   :Yes - Print alert
   Generate 3 seconds of alert

7. Open audio relay
   Print time (if time clock installed)
   Print bar
   Issue one beep

8. Wait one second for another send
   Send command received?
   :Yes - Process send again at step 1.

9. Open PTT relay
   Open control relays

INSTANT CALL GENERATED

1. Block 0 (call stack)?
   :Yes - Print "I-C STACK"

2. Display "SEnd"
   Print "SEND 0"
   Print time (if time clock installed)

3. Is call stack empty?
   :No - Get next call from call stack
   Display call number
   Is call valid?
   :No - Print call number
   Print "?"
   Issue two beeps
   Go back to step 3.
   :Yes - Print the control relays if they changed
   Momentary channel select mode?
   :Yes --> MOMENTARY SELECT
   :No --> DIRECT KEYING
   Is channel busy used and busy timed-out?
   :Yes - Skip to step 5.
   Print call number
   Close audio relay
   Wait 100 millisecond
   Generate encoding tones
   Wait the programmed inter-page gap (stack delay)
   Go back to step 3.

4. Is last call a custom call with alert?
   :Yes - Print alert
   Generate 3 seconds of alert

5. Open audio relay
   Display time (if time clock installed)
   Print bar
   Issue one beep

6. Wait one second for another Instant Call
   Instant Call received?
   :Yes - Process call again at step 1.

7. Open PTT relay
   Open control relays.

MOMENTARY SELECT

1. Is PTT still closed and are the last used control relays same as the desired control relays?
   :Yes - Skip remaining steps here

2. Open PTT relay
   Open control relays
   Wait 150 milliseconds
   Close programmed control relays
   Wait 150 milliseconds
   Open control relays
   --> SAMPLE CHANNEL BUSY

3. Is channel busy used and has it been busy for over 30 seconds?
   :Yes - Skip remaining steps here

4. Close PTT relay (if verify mode off)
   Wait the programmed key-up delay
   Close the audio relay

DIRECT KEYING

1. Is PTT still closed and are the currently closed control relays same as the desired control relays?
   :Yes - Skip remaining steps here

2. Open PTT relay
   Open control relays
   Wait 150 milliseconds
   --> SAMPLE CHANNEL BUSY

3. Is channel busy used and has it been busy for over 30 seconds?
   :Yes - Skip remaining steps here

4. Close programmed control relays
   Wait 150 milliseconds
   Close PTT relay (if verify mode off)
   Wait the programmed key-up delay
   Close the audio relay

SAMPLE CHANNEL BUSY

1. Is channel busy used?
   :No - Skip remaining steps here

2. Is channel busy?
   :No - Skip remaining steps here

3. Print "BUSY"

4. Issue a beep
   Display "bUSY" momentarily

5. Is a key pressed?
   :Yes - Skip remaining steps here

6. Is the 30 second time-out over?
   :No - Go back to step 4.

7. Print "BUSY OUT"
   Do not proceed with key-up for this call

RELAY TIMING DIAGRAM

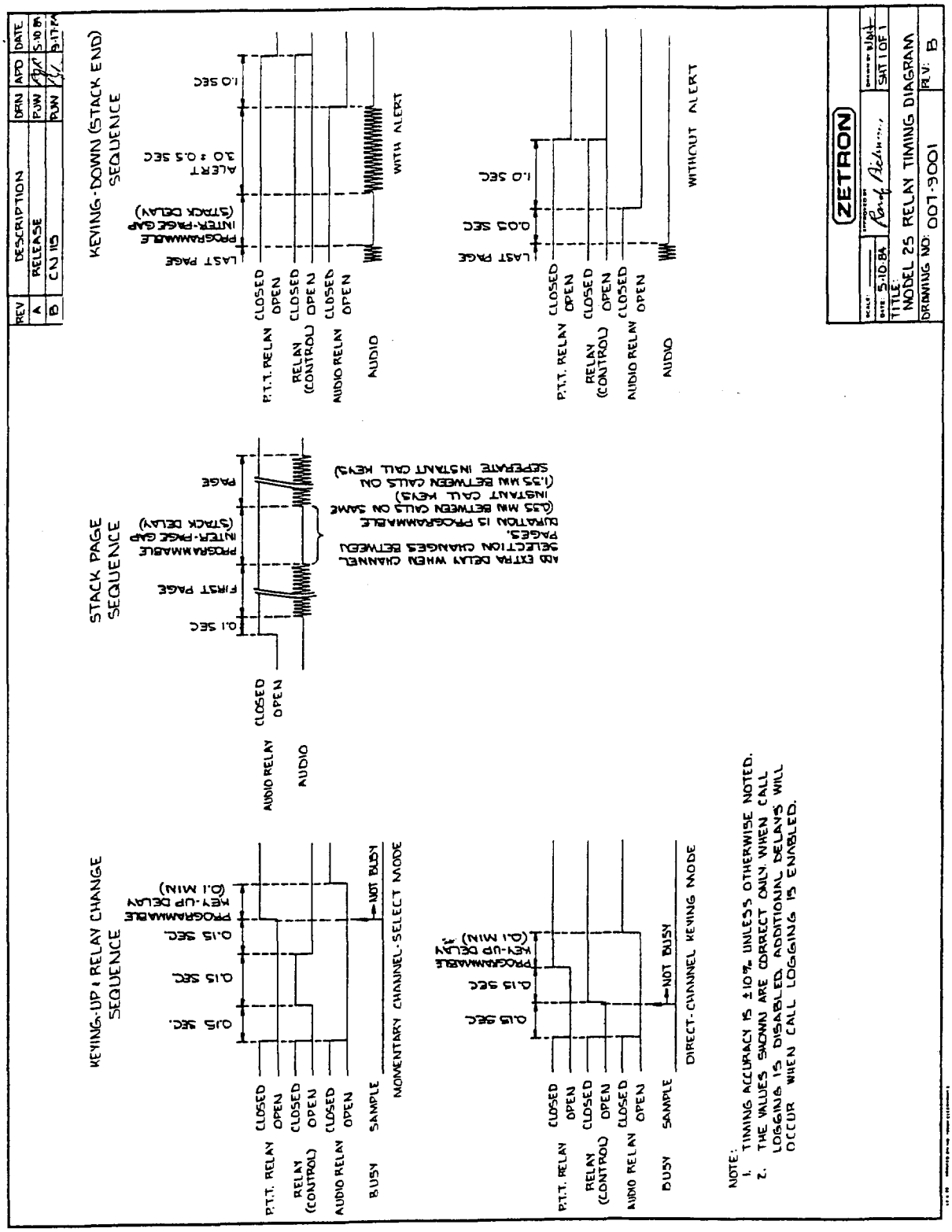

4. ENCODER INSTALLATION

Proper grounding of the Model 25 encoder 4-1

Inside the encoder 4-2

Model 25 - disassembly and circuit location view of encoder 4-4
- Keypad enable/disable 4-5
- Display scroll enable/disable 4-5
- Channel busy impedance 4-6
- Audio level adjustment range 4-6
- Computer port connector position 4-6
- Instant call clear key function 4-7
- Instant call left column function 4-7

Outside the encoder 4-8
- Programming enable/disable switch 4-8

Model 25 - rear view of encoder 4-9
- Transmitter/console control 4-12
- Channel busy monitors 4-14
- Audio output/muting 4-14
- Tone monitor 4-15
- Auxiliary panels 4-16
- Power 4-16

Computer port 4-17

Installation aids 4-20
- Deviation test 4-20
- Verification mode 4-20
- Serial port control 4-21

Panel labels 4-22

The clock option 4-23

Software changes 4-24

PROPER GROUNDING OF THE MODEL 25 ENCODER

Installation of the Model 25 into any Communication Console or System requires that proper grounding techniques be followed. Failure to provide the individual units with the proper "Ground Reference" could result in one or more of the following symptoms.

1.) The Unit or Units operate erratically when handled or touched, other equipment or conductive material which is electrically connected to the unit which is not grounded properly may also display this problem.

2.) The audio output levels may be unusually low. The Model 25 is capable of providing sufficient amplitude for driving most standard audio input devices. However, without the proper grounding the Encoder's audio will appear to be low or may vary over time.

3.) The Unit may appear to "Reset" unexpectedly. If a ground problem exists, variations in the supply voltage may occur. The Model 25 is equipped with a reset circuit which is sensitive to variations in the supply voltage. When this variation is detected the Model 25 may reset to insure that proper operation is maintained.

Refer to the diagram below for information on proper grounding of the Model 25.

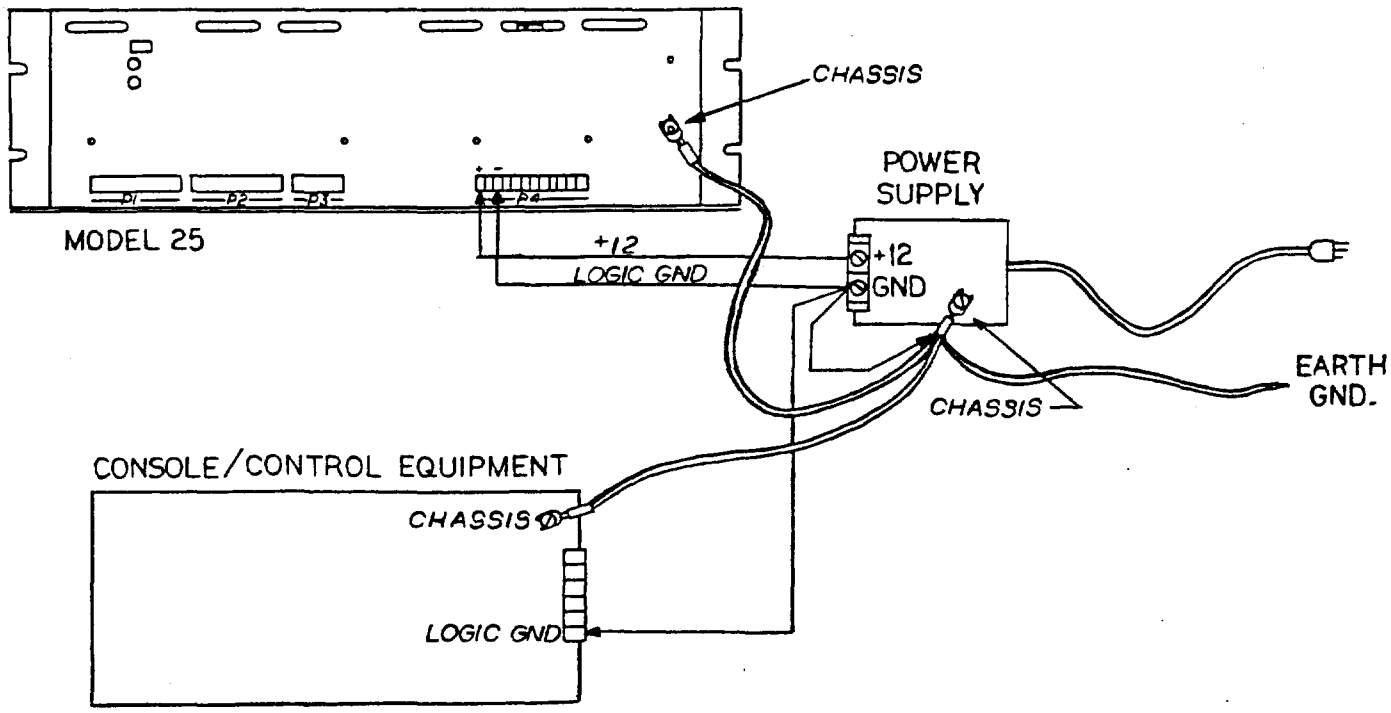

SECTION 4 - ENCODER INSTALLATION

NOTE: This equipment generates, uses, and can radiate radio frequency energy; and if not installed and used in accordance with the instruction manual, may cause interference to radio communication.

Installation of the Model 25 encoder and auxiliary panel should be accomplished by personnel with experience in selective signaling and radio dispatch console systems.

NOTE: Power to the encoder should not be connected until all other connections have been completed.

This section describes the connection of the Model 25 Encoder to a generic console. The Appendix of this manual describes installation of the Model 25 into specific consoles. If your console is not found in the Appendix, then a Zetron Application Engineer may have some helpful information regarding installation. This section is applicable to most consoles, and should be read thoroughly prior to installing the encoder into any type of console.

Installation of the Model 25 encoder consists of positioning the jumpers, wiring the encoder to the console or base stations, wiring the encoder to any auxiliary instant call panels, connecting the encoder to call logging or remote control devices, adjusting the levels, labeling the keys, and programming the operational parameters. These steps are described in this section in the order in which they may most easily be performed. The end of this section describes the installation of optional features such as the time clock or additional formats. Details of the parameter programming are contained in the Programming Guide.

INSIDE THE ENCODER

If internal options of the Model 25 need to be changed then the Model 25 encoder should be opened up and the changes made prior to its installation in the console. A list of internal encoder options and their factory settings follow. The remainder of this section describes the internal options in detail.

INTERNAL OPTIONS (parentheses show factory setting)

Keypad enable/disable (enabled for 901-9019, disabled for 901-9022)
- Jumper JP2 - digital board
  - 'A' position : keyboard disabled
  - 'B' position : keyboard enabled

Display scroll enable/disable (disabled)
- Jumper JP1 - digital board
  - 'A' position : display scroll enabled
  - 'B' position : display scroll disabled

Channel busy impedance (low impedance)
- Jumpers JP1 - JP4 - analog board
  - jumper IN : low impedance
  - jumper OUT : high impedance

Audio adjustment range (range = -60 to -10 dBm)
- Resistor R22 - analog board
  - R22 = 120K ohm : range = -60 to -10 dBm
  - R22 OUT : range = -60 to +7 dBm

Audio de/pre-emphasis (de-emphasis)
- Capacitors C16 & C17 (.47UF), Jumper JP5 - analog board
  - C16 & C17 OUT, JP5 position 'A' : no emphasis
  - C16 & C17 OUT, JP5 position 'B' : de-emphasis
  - C16 & C17 IN, JP5 position 'A' : pre-emphasis

Internal Monitor Speaker enable/disable (enabled)
- Jumper JP6 - analog board
  - jumper position 'A' : speaker enabled
  - jumper position 'B' : speaker disable (for external speaker)

Computer port connector position (front 901-9019, back 901-9022)
- Computer port connector
  - computer port on front panel
  - computer port on back panel

Instant call CLEAR key function (CLEAR key clears all LEDs)
- Jumper JP3 - instant call driver bd.
  - jumper IN : CLEAR key clears all LEDs
  - jumper OUT : CLEAR key clears selected LEDs

Instant call left column function (left column functions normally)
- Jumper JP1 - instant call driver bd.
  - 'A' position : left key column functions normally
  - 'B' position : left key column selects panel address
  - 'C' position : left key column functions normally

MODEL 25 - DISASSEMBLY AND CIRCUIT LOCATION VIEW OF ENCODER

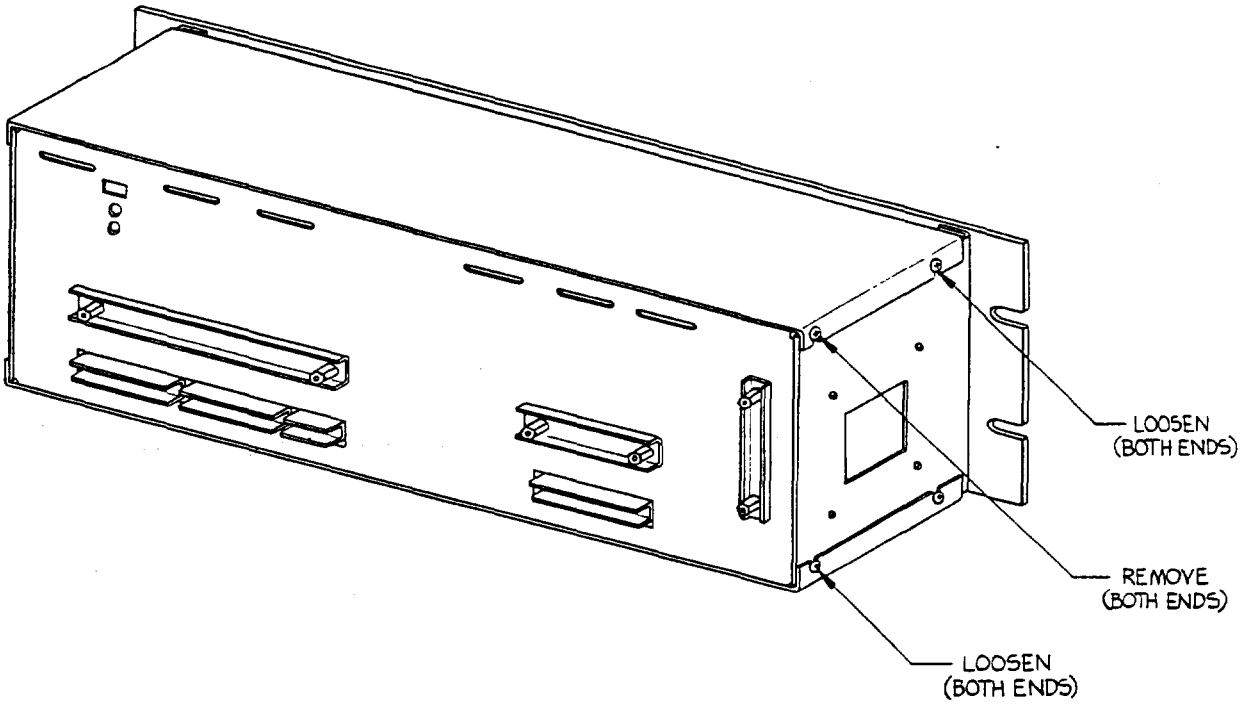

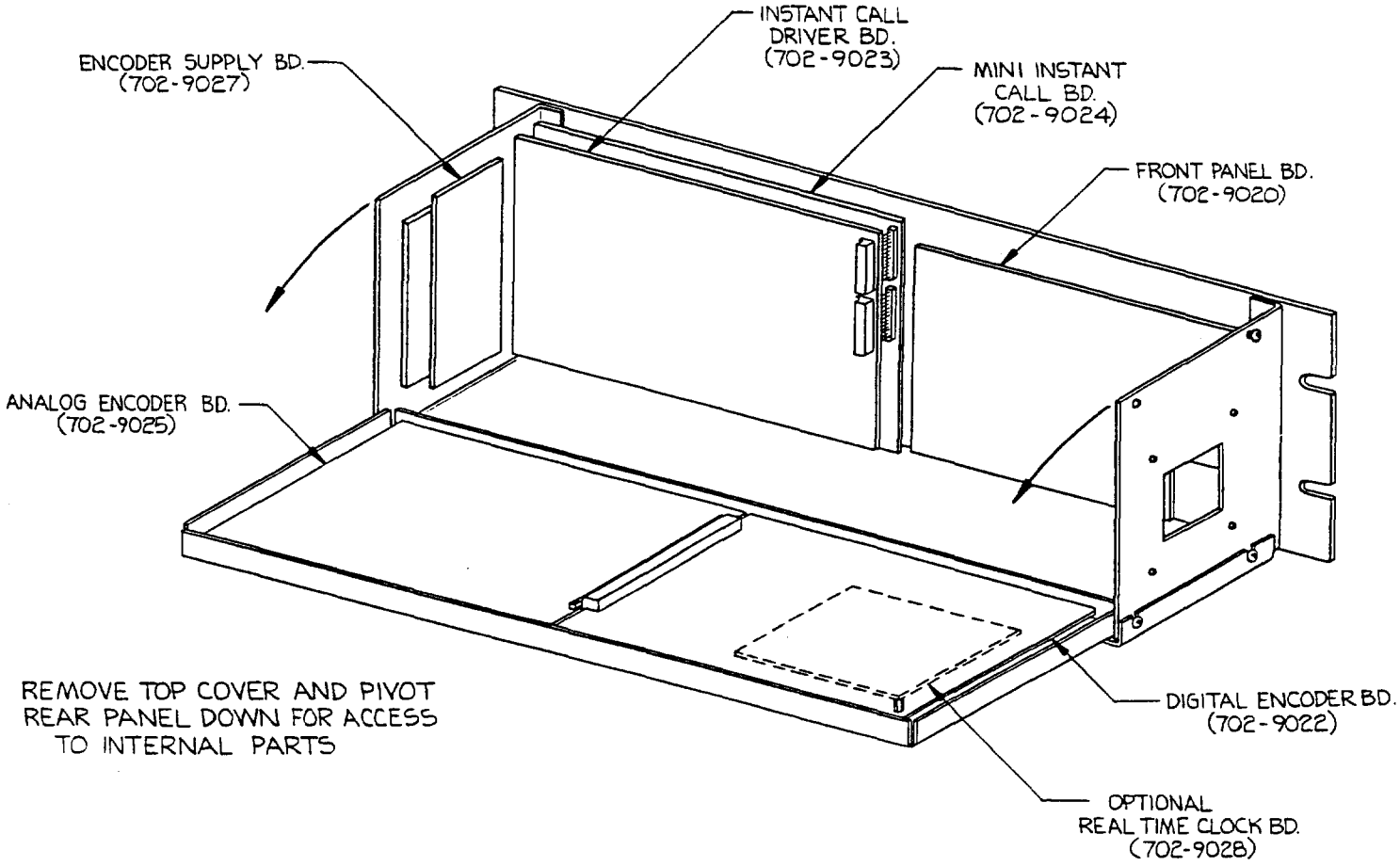

REMOVE TOP COVER AND PIVOT REAR PANEL DOWN FOR ACCESS TO INTERNAL PARTS

In order to change any of the factory settings, the encoder will need to be opened up. The accompanying diagram shows a disassembly view of the encoder. Refer to this diagram to find the location of the various circuit boards in the encoder. To open the encoder, loosen two of the screws that retain the top cover near the front panel. Loosen two of the screws that retain the bottom cover near the back panel. Remove the two remaining screws that are retaining the top cover near the back panel. The top cover may now be removed and the back panel (holding the digital and analog boards) may be hinged down. When replacing the top cover, be sure that the turned-down lip faces the front panel otherwise the front panel may flex if pressed excessively.

Keypad Enable/Disable
The keypad of the encoder may either be enabled or disabled by the placement of the jumper, JP2, on the encoder digital board (702-9022). If use of the keypad is necessary then the jumper must be in the 'enabled' or 'B' position. If you wish input from the keypad to be ignored then the jumper must be placed in the 'disabled' or 'A' position. Note that the RESET key on the front panel can't be disabled.

It is possible to remotely enable or disable the keypad with a SPST switch wired across the 'A' position stakes of the jumper, but the length of the wire used should be kept under 23 cm (9 inches). If the jumper is changed while power is applied then the RESET key may need to be pressed to reconfigure the encoder action.

Display Scroll Enable/Disable
The display of the encoder may either be used to scroll the call number being sent or to display only the last four digits of the call number. The jumper used to select the option is jumper JP1 on the encoder digital board (702-9022). If scrolling is desired then jumper JP1 must be placed in the 'scroll' or 'A' position. If scrolling is not desired then jumper JP1 must be placed in the 'no scroll' or 'B' position.

When scroll is enabled, the display of the call number being sent, if over 4 digits in length, will marquee across the display at a rate of about three characters per second. Scroll enabled will cause the encoder to add a considerable delay to its calling sequence and thus add to the time that the encoder is on the air. When scroll is disabled, only the last four digits of the call number being sent are displayed and no delay is added to the calling sequence.

Channel Busy Impedance
The impedance of each of the four channel busy inputs is selectable between high impedance and low impedance using the jumpers, JP1 through JP4 on the encoder analog board (702-9025). With a jumper in, the impedance is low and the input is pulled to incoming power (+12V) via a 10K ohm resistor. With a jumper out, the impedance is high and the input is in series with a 3.3k ohm resistor to the base of a NPN transistor. The following diagram shows a typical channel busy input. A complete description of channel busy use may be found in the subsection 'Outside the Encoder'.

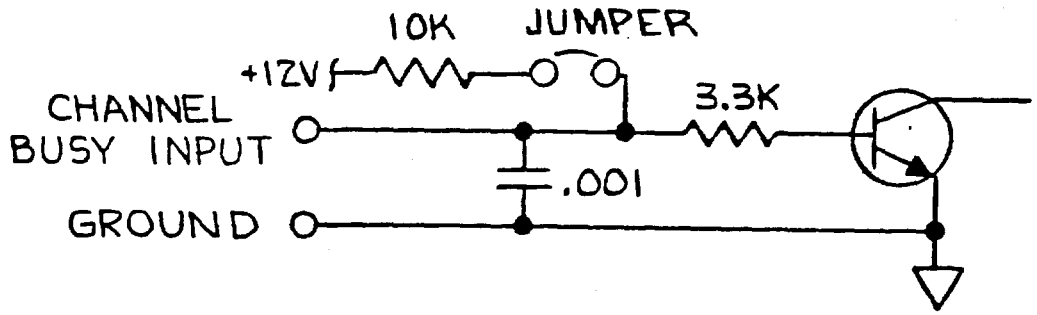

Audio Level Adjustment Range
The audio level adjustment range of the encoder is selectable between two ranges by the presence or absence of the 120k ohm resistor, R22, at the top of the encoder analog board (702-9025). The presence of R22 will cause the audio level adjustment range to be -60dBm to -10dBm (0.75 V peak-peak max). The absence of R22 will cause the audio level adjustment range to be -60dBm to +7 dBm (5.0 V peak-peak max). If less than -10dBm is needed, then the lower adjustment range is recommended since otherwise a precise level adjustment via the four-turn potentiometer will be hard to achieve.

Computer Port Connector Position
In the encoder configuration is equipped with a keypad (901-9019), the computer port connector may be removed from the front panel and installed on the rear or side panel. To do this, remove the two Allen head screws and lock nuts that attached the DB9P connector to the front panel. The screws will require a 1/16" Allen driver. Secure the small cover plate {(415-9088) supplied with encoder} over the hole in the front panel using the previously removed Allen head screws and nuts. Reroute the connector and ribbon cable through the square hole provided in the nearby side.

To mount the connector on the side panel, remove the vertical strain relief bar from the nearby side of the rear panel and use it to clamp the ribbon cable to the side panel. You will need to supply two #4 screws and nuts to secure the strain relief using two of the four holes in the side panel. Be sure that the screws holding the strain relief do not interfere with the optional time clock board when the back panel is closed.

To mount the connector on the back panel, remove the vertical strain relief bar from its securing studs. Reinstall the strain relief bar over the ribbon cable of the connector. Note that the cable may interfere with the hinging of the back panel if it is installed on the back.

Instant Call CLEAR Key Function
Jumper, JP3, on the instant call panel driver board (702-9023-001 attached to the front panel) is used to select the instant call CLEAR key function. When JP3 is installed, the instant call CLEAR key is used to clear all of the panel's instant call LEDs simultaneously by a single press. When JP3 is omitted, the instant call CLEAR key is used to clear LEDs selectively. Using the selective method, the CLEAR key is pressed once and its LED will illuminate to indicate that the panel is in the clear mode. A press of any other instant call key will now cause that key's LED to turn off. Another press of the selective CLEAR key will cause its LED to turn off, thus disabling the panel clear mode. The selective method is useful in removing unwanted instant calls from the call queue while allowing others to remain. If jumper, JP3, is moved while power is applied, then power must be removed and reapplied in order to cause the new configuration to take effect.

Instant Call Left Column Function
Jumper, JP1, on the instant call panel driver board (702-9023-001 attached to the front panel) is used to extend the addressing capability of the 29-key instant call panel. While JP1 is in the A or C position, the panel functions normally with panel address p=0 allowing access to each of the 29 instant call buttons. While JP1 is in the B position, the top four keys of the left-hand column are used to select one of four different panel addresses for the remaining 25 instant call keys. In this way, the small 29-key panel may access 100 different call stacks. Possible uses include time of day personnel shift changes or selection between main and standby transmitters (via the control relay programming).

Key 0x00 (top, left-hand instant call key) selects panel address p=0 (this is the setting after power-on); key 0x10 (next key down) selects panel address p=1; key 0x20, selects panel address p=2; and key 0x30, selects panel address p=3. One of the LEDs on these four keys will illuminate to show the current panel address. In this special mode of operation, the instant call key numbering varies and is similar to the numbering of the left-half of the full-sized auxiliary instant call panel. Note that if any instant call key is pending transmission (LED is fully illuminated), the panel address cannot be changed. Also when a panel address is changed, the LEDs that were previously blinking are fully extinguished. This special feature is only available on the half-sized instant call panel on the encoder with keypad (901-9019).

If jumper, JP1, is changed while power is on, the encoder power must be cycled in order for the encoder to recognize the changed setting.

OUTSIDE THE ENCODER

NOTE: All of the connections to the console or base stations and auxiliary panels are made through the four removable terminal blocks, P1 - P4, at the bottom of the encoder's back panel (see back panel view). These removable terminals should be removed from their receptacles while wire termination is made otherwise the connection may become poor. Some of the plugs will fit into other receptacles so use caution to be sure that the plugs are placed in the proper receptacle. There are horizontal bars over each of the plugs that may serve as strain reliefs for the wiring. A brief description of each signal is shown in the following diagram.

Programming Enable/Disable Switch
The altering of programmable parameters may either be enabled or disabled by the Programming Enable/Disable switch on the encoder digital board (702-9022). The switch can be accessed on the rear panel of the Model 25. The encoder will ignore any attempt to access any programming mode from the key pad when the switch is in the disabled position. The encoder will operate properly with the switch in either position. Setting the switch to the disable position after programming is complete will help protect the encoders memory from possible electrical disruption an well as inadvertent programming.

All programming modes are accessible through the serial port regardless of the position of the switch. An Error 9 message will occur if the programming is attempted while the programming switch is in the disabled position.

MODEL 25 - REAR VIEW OF ENCODER

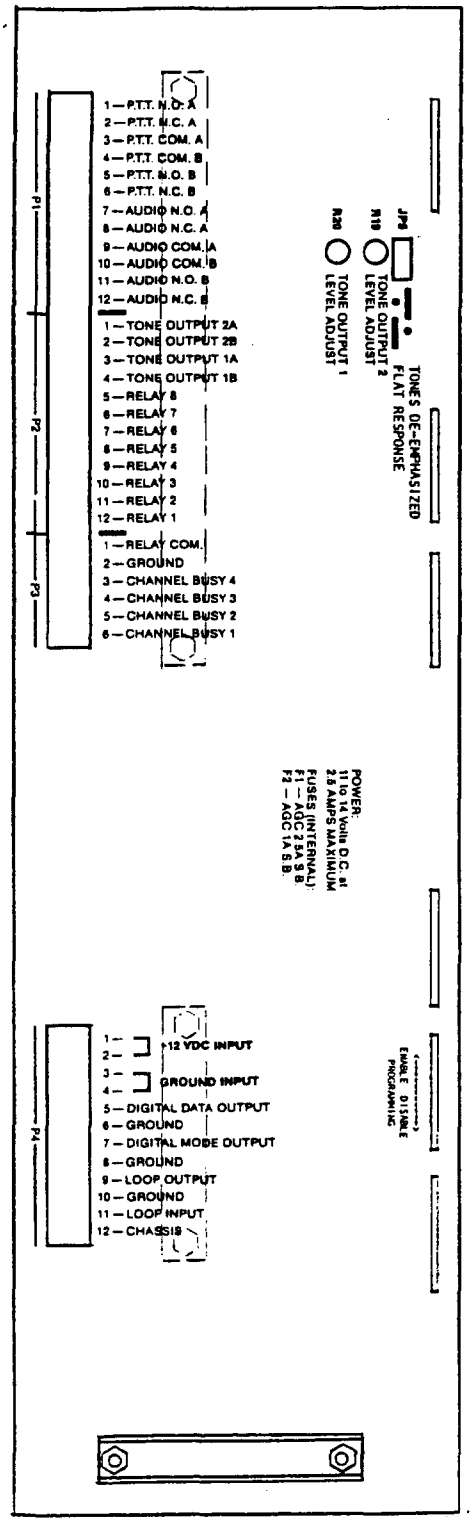

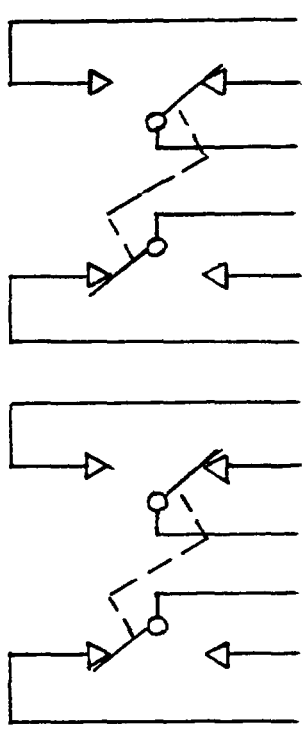

PIN	LABEL	FUNCTION
1-P1	P.T.T. N.O. A	push-to-talk normally open
2-P1	P.T.T. N.C. A	push-to-talk normally closed
3-P1	P.T.T. COM. A	push-to-talk common A
4-P1	P.T.T. COM. B	push-to-talk common B
5-P1	P.T.T. N.O. B	push-to-talk normally open
6-P1	P.T.T. N.C. B	push-to-talk normally closed
7-P1	AUDIO N.O. A	audio switch normally open
8-P1	AUDIO N.C. A	audio switch normally closed
9-P1	AUDIO COM. A	audio switch common A
10-P1	AUDIO COM. B	audio switch common B
11-P1	AUDIO N.O. B	audio switch normally open
12-P1	AUDIO N.C. B	audio switch normally closed

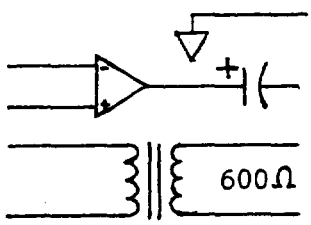

PIN	LABEL	FUNCTION
1-P2	TONE OUTPUT 2A	external monitor speaker 4-8 ohm speaker
2-P2	TONE OUTPUT 2B	external monitor speaker
3-P2	TONE OUTPUT 1A	audio tone output
4-P2	TONE OUTPUT 1B	audio tone output

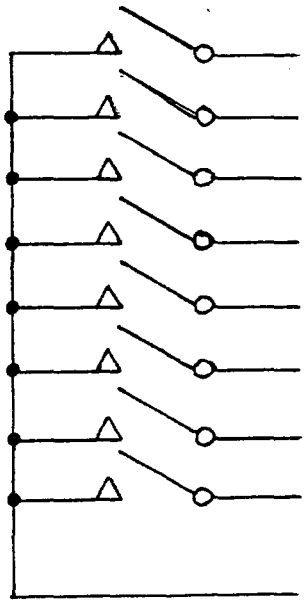

PIN	LABEL	FUNCTION
5-P2	RELAY 8	8th control relay contact
6-P2	RELAY 7	7th control relay contact
7-P2	RELAY 6	6th control relay contact
8-P2	RELAY 5	5th control relay contact
9-P2	RELAY 4	4th control relay contact
10-P2	RELAY 3	3rd control relay contact
11-P2	RELAY 2	2nd control relay contact
12-P2	RELAY 1	1st control relay contact

PIN	LABEL	FUNCTION
1-P3	RELAY COM.	control relay common point

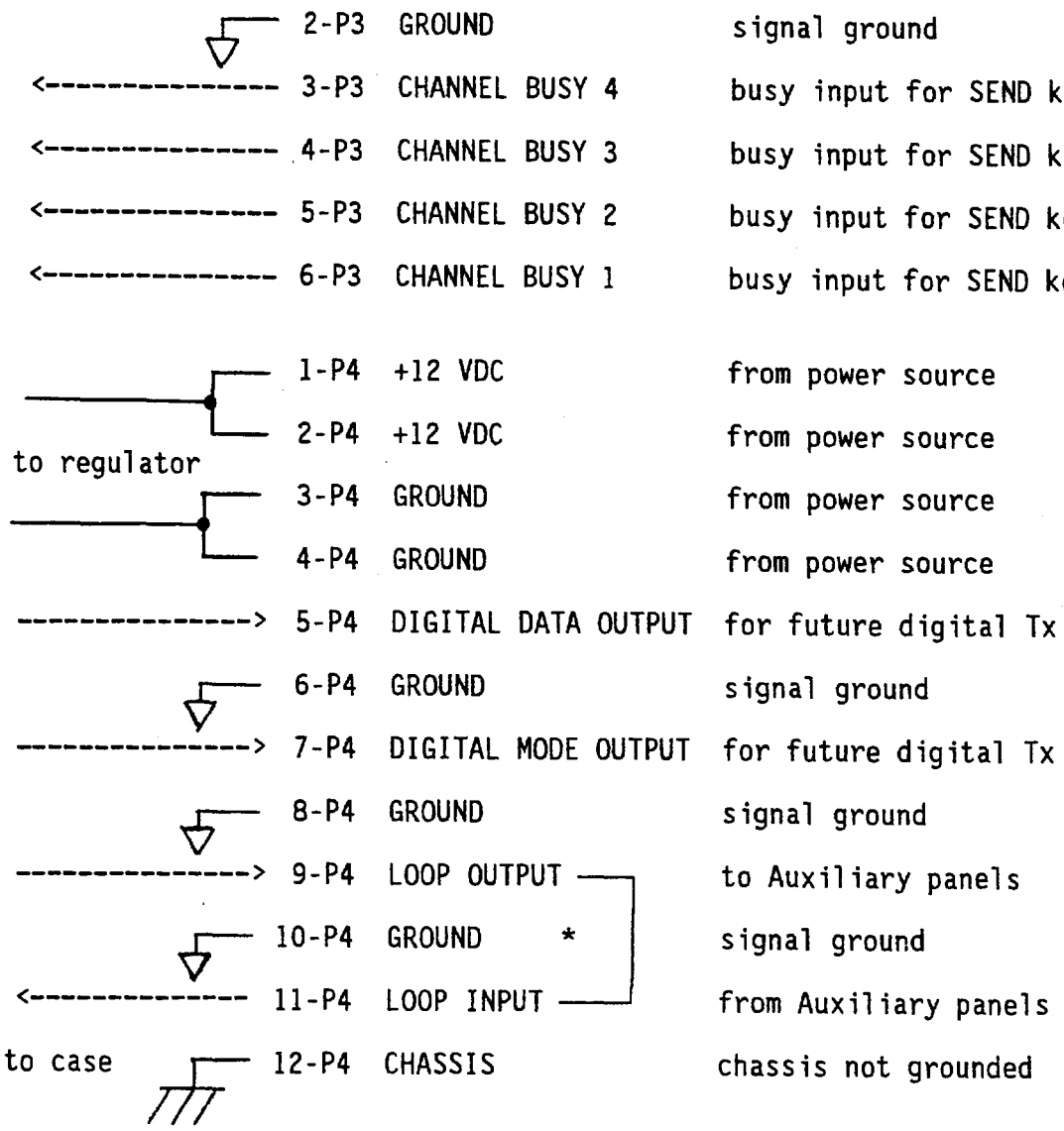

* Jumper 'LOOP OUTPUT' to 'LOOP INPUT' if no auxiliary Instant Call panels are used.

Transmitter/Console Control

The Model 25 is designed to directly control from one to eight channels or transmitters, singly or simultaneously. The encoder achieves transmitter or console control through its eight control relays, its single DPDT Push-To-Talk (P.T.T.) relay and its single DPDT Audio Steering relay. The control relays (labeled RELAY at the connection) have normally-open contacts and each one closes to a common, ungrounded point (RELAY COM.) when activated. During a calling sequence, the P.T.T. relay and up to eight control relays will close. The control relays used during a calling sequence depend on the programming of the encoder. If one of the four SEND keys are used to initiate a calling sequence, then the control relays used are the relays programmed for the SEND key. If an instant call key is used to send a call stack then the control relays used are the relays programmed for the calls in the call stacks. The exact timing of the relay closures may be found in the Operation Section under 'The Calling Sequence'. The details of programming the transmitter control parameters may be found in the Programming Guide.

There are two options for the use of the control relays. The control relays may be used to directly key the channels (direct keying mode) or they may be used to automatically select the channels on the console (momentary select mode). The selection of the keying method is done through programming.

Using the direct keying option, the control relays are used to directly key up to eight transmitter. The control relays along with P.T.T. will remain closed for the entire duration of the calling sequence. Using this option the P.T.T. relay is typically wired in series with the control relay common point so that each control relay acts like a P.T.T. for the transmitter wired to it.

The momentary select option uses a momentary closure (pulse) of the control relays to automatically select one or more channels just prior to closing the P.T.T. relay. The pulse action of the control relays emulates the electrical signal generated by the momentary press of a console's "select" key. Using this option the P.T.T. relay is typically wired across the console P.T.T. and the eight control relay contacts are wired either directly to the channel select key or to some point in the channel's Tx/Rx module. If the select keys on the console are a function-toggle type (push to select, push again to de-select) or a latching type (switch down when selected) then the control relays must not be wired directly to the select keys.

Occasionally, it may be necessary to transmit over more than one channel at a time. If this is required of a system attached to a console, then the encoder may also control the console's simul-select signal. The Audio relay, if not required for audio steering/muting purposes, may be used for simul-select control via programming. When the simul-select control is enabled, the Audio relay lags the opening and closing of the eight control relays by 100 milliseconds. This allows the control relays to cancel the selection previously made on the console prior to turning on simul-select. After transmission, the simul-selected channels will remain selected to allow convenient transmission of the voice message.

Another programmable channel control parameter is the transmitter key-up delay. The key-up delay that is programmed is used for all channels or transmitters that the Model 25 controls. The transmitter key-up delay is the duration between closure of P.T.T. and the beginning of encoding tones. This delay is programmable in 100 millisecond increments from 0.1 to 9.9 seconds.

The following diagram shows the wiring of the control and P.T.T. relays for a typical direct keying application. Since the wiring for momentary select applications is so varied, the details of the connections are described for different types of consoles in the applications appendix in the back of this manual. If your type of console is not shown, then a Zetron engineer can help you find suitable console connection points.

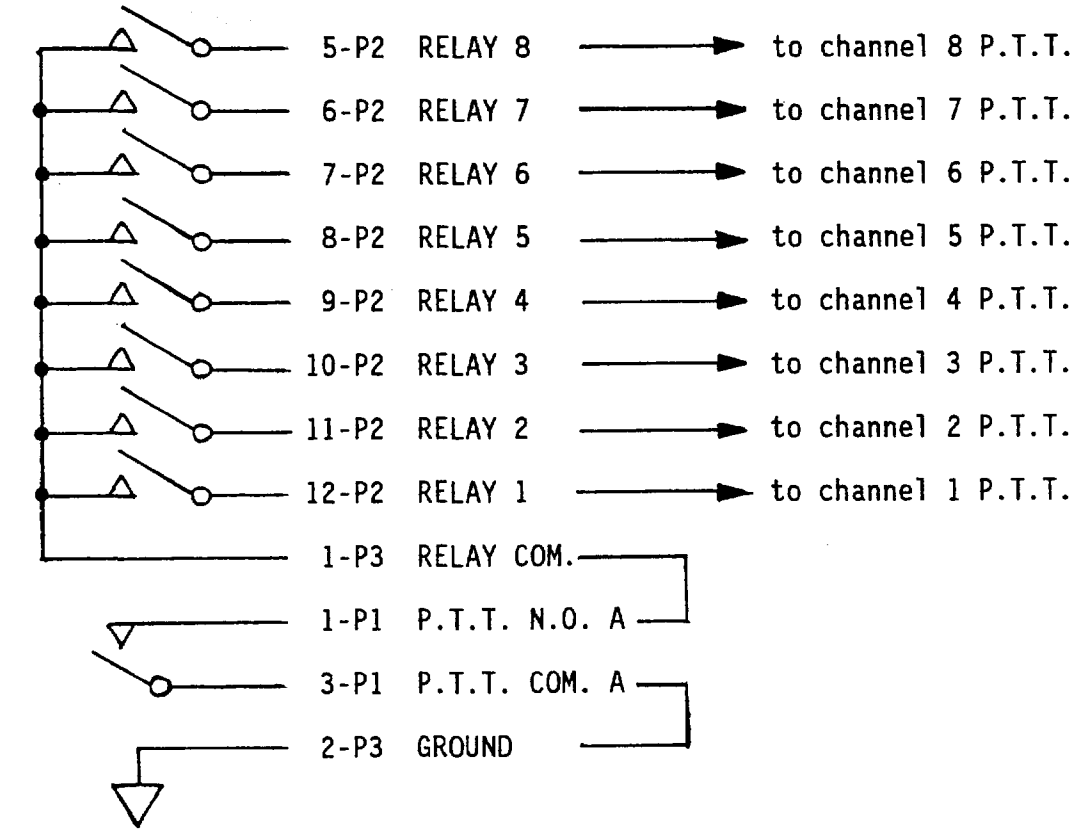

Channel Busy Monitors
There are four common ground inputs on the Model 25 that are designed for monitoring channel status. Each of the channel busy inputs are associated with a particular SEND key. Channel busy 1 is associated with the uppermost SEND key (SEND 1) and channel busy 4 is associated with the bottommost SEND key (SEND 4). The LED adjacent to each SEND key indicates the busy state of the key's associated busy input. The LED should illuminate when the monitored state is 'busy' and should not illuminate when the monitored state is 'not-busy'.

Each channel busy input may be used to inhibit a transmission initiated using its associated SEND key. There is also a way to inhibit transmissions initiated using instant call keys. The details of transmission inhibiting are described in the Operation Section under 'The Calling Sequence'. Normally the channel busy inputs would be connected to the 'call' or 'busy' signals of the channel modules in the console. However, the inputs may be connected to the 'select' indicator signals of the channel modules. The inhibiting or non-inhibiting of transmissions is programmable. This is the 'busy use' parameter.

Each channel busy input is designed to detect two logic states; 'busy' or 'not-busy' (clear). If the inputs are connected to the 'select' signals, then the two logic states are 'unselected' and 'selected'. The voltage present at the input determines the state. One state occurs when the voltage at the input is from 0.0 to 0.5 volts with respect to ground. The other state occurs when the voltage at the input is from 1.0 to 24.0 volts. Voltages between 0.5 and 1.0 volts may cause an undeterminable state. The voltage range which causes the 'busy' or 'unselected' logic state is programmable. This is the 'busy polarity' parameter.

The input impedance of each input is selectable internally between high and low impedance. The subsection 'Inside the Encoder' describes the way the impedance is selected.

Audio Output/Muting
The audio section of the Model 25 consists of a balanced 600 ohm audio output and a DPDT audio muting (switching) relay. The audio muting relay will close (common connects to normally-open) when encoding or alerting tones are being generated. This allows the console microphone to be muted (transmit audio switched from the console microphone to the encoder audio) when a calling sequence is in progress. The output impedance of the Model 25 may be increased to match that of a high impedance microphone by adding a series resistor. Many consoles provide an auxiliary audio bus meant specifically for encoder audio. If this is the case then connect the audio output to the auxiliary audio bus rather than the microphone input.

The audio output level is adjustable via the trimmer potentiometer, R20, which is accessible through the hole in the back panel. The output level may be increased by turning the potentiometer clockwise. The adjustment range is either -60dBm to -10dBm or -60dBm to +10dBm depending on the presence or absence of a resistor on the inside of the encoder. See the subsection 'Inside the Encoder' for details on selecting the range.

The audio emphasis is shipped from our factory to give one pole (6dB/octave) of de-emphasis over the frequency range 250 to 3276 Hz. However, pre-emphasis or flat response may be added by the alteration of jumper JP5 and two components on the inside of the encoder (see subsection 'Inside the Encoder').

Tone Monitor
A 0.2 watt monitor speaker is provided inside the encoder. The output level to the speaker is adjusted by potentiometer R19, accessible from the encoders rear panel.

The speaker drive output is available on connector P1-1 and P2-1 labeled 'TONE OUTPUT 2A/B'. The internal speaker may be disabled by placing jumper JP6 on the analog board in position 'B'.

* * * * * * * * * * * * * * * W A R N I N G * * * * * * * * * * * * * * * *

The output stage of the audio output consists of a 600-ohm transformer. The size of the transformer will not allow any appreciable DC current to be passed through it without saturation or overheating. DO NOT use the audio output to directly modulate a DC-remote interface!

* *

The following diagram shows the wiring of the audio section for a typical microphone-replacement application. If an auxiliary audio input bus is available then the audio output should be connected to it instead. This diagram is not applicable if the simul-select is enabled via programming.

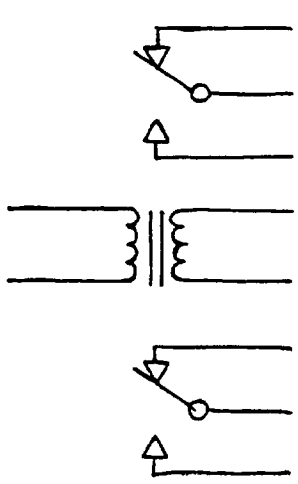

INTERNAL CIRCUITRY	PIN	LABEL	CONNECTION
	8-P1	AUDIO N.C. A	← from console microphone
	9-P1	AUDIO COM. A	→ to console audio input
	7-P1	AUDIO N.O. A	←
	3-P2	TONE OUTPUT 1A	
	4-P2	TONE OUTPUT 1B	
	11-P1	AUDIO N.O. B	←
	10-P1	AUDIO COM. B	→ to console audio input
	12-P1	AUDIO N.C. B	← from console microphone

INSTALLATION AIDS

Once the encoder has been powered on, several installation aids may be invoked to help in adjustments and programming verification.

Deviation Test

The encoder may be made to continuously generate a sequence of three tones for use in determining the proper tone output level and the proper pre-emphasis or de-emphasis. The deviation test consists of a 500 Hz tone, followed by a 1000 Hz tone, followed by a 2000 Hz tone, each tone lasting four seconds. This sequence is repeated until the encoder RESET key is pressed. When RESET is pressed, the encoder will begin its operation as if power had been removed and reapplied (power-on self test will begin).

The deviation test is invoked from the encoder keypad by holding down the RESET key then holding down the '1' key and releasing the RESET key. When the encoder display shows the word "PrOG" the '1' key may be released at which time the display will change to "1 __". Now key-in the number 41 and the deviation test will begin. From a CRT the deviation test is invoked by typing a 'P', '1', then '41'. The deviation test is halted from a CRT by holding the 'break' key down for 2 seconds. While the tones are being generated for the deviation test, the encoder display will show the word "tOnE".

Verification Mode

Often times it is desirable to measure the encoding tones, one at a time, in a simulated transmission but without keying the transmitter and sending the tones over the air. The verification mode, when enabled, will prevent the Push-To-Talk from ever closing. Also each individual encoding tone will pause for verification at the audio output until a keyboard key is pressed. The tone sequences will progress to the next tone only when a key is momentarily pressed. Gap durations, which generate no tone, also pause until a key is pressed. When verifying a stack of calls, the current call begin generated will have its number shown in the encoder display. Holding two keys down simultaneously will cause the tones to rapidly progress so that a particular call in a stack can be reached quickly. Note that the tones generated while in verify mode may not be as accurate as when they are being sent in normal operation. The tones may be off by as much as 1% at the higher frequencies. The verification mode, therefore, is more for programming verification rather that tone accuracy verification.

The verification mode is enabled or disabled via the encoder keypad by holding down the RESET key then holding down the '1' key and releasing the RESET key. When the encoder shows the word "PrOG" the '1' key may be released at which time the display will change to "1 __". To enable the verification mode key-in the number '51'. To disable the verification mode key-in the number '50'. After keying the two-digit number the encoder will return to the normal idle state.

From a CRT the verification mode is enabled by typing a 'P', '1', then '51'. The verification mode is disabled by typing a 'P', '1', then '50'. After typing the number, press the 'break' key for 2 seconds and the encoder will return to the normal idle state.

Serial Port Control

The serial port of the encoder is used to communicate with devices attached to the computer port or the instant call panels depending on the state of the 'RMT-CTL' signal. A problem in the wiring of either the auxiliary panels or remote control devices may result in a non-functional encoder. As a fault isolation aid, the serial port may be disabled from transmitting or receiving characters. When disabled the encoder will function normally from the keypad only. Note that 2 seconds or more of a 'break' or 'space' level at the computer port will always result in the encoder being reset.

The serial port is enabled or disabled via the encoder keypad by holding down the RESET key then holding down the '1' key and releasing the RESET key. When the encoder shows the word "PrOG" the '1' key may be released at which time the display will change to "1 __". To enable the serial port, key-in the number '61'. To disable the serial port, key-in the number '60'. After keying the two-digit number the encoder will return to the normal idle state.

The serial port should not be disabled from a CRT since remote control of the encoder will be lost when the serial port becomes disabled. Enabling of the serial port from a CRT is pointless since it must be enabled for the CRT to command the encoder. Removing and reapplying the power to the encoder will cause the serial port to be enabled.

PANEL LABELS

The area in between the instant call key columns is designed to hold labels for the keys to the right of the area. The plastic overlay covering the label area serves to protect and retain the instant call labels. At the back of this manual are several sheets, each one containing ten instant call key column labels. These sheets may be removed and placed in a typewriter so that the labels may be printed with a description of the call(s) generated by the adjacent key. A colored high-lighter pen can be used on the labels to add a level of priority to certain instant call keys. The labels are removed from the sheet by cutting on the inside of the bold border line. When cut in this fashion, the label will fit exactly into the label area on the panel. When printing the labels, keep in mind that the lower right hand instant call key is reserved as the panel's CLEAR key. Also if the review-before-send option is to be used, then the lower left hand instant call key acts as the SEND QUEUE key for the panel.

For consistency with the operators manual, we suggest that if the review-before-send option is used, that the lower left hand key should be labeled "REVIEW/SEND" or "SEND QUEUE" and if possible, this should be coded in a distinctive color. The function of the CLEAR key (lower right hand key) should be shown on its label as "SELECTIVE CLEAR" or "ALL CLEAR". The CLEAR key label, too, should have a distinctive color.

The labels are installed on the panel by lifting the plastic window from the panel until the top of the window comes free of the retaining lip. A pointed object may help grip the plastic window from between the columns of the keys. After the labels have been centered in the area, the plastic window may be inserted under the retaining lip. There should never be a need to remove the top or bottom trim pieces that hold the plastic overlay.

Included with each panel is a number of red instant call key-tops. These key-tops may replace the standard clear key tops to add yet another level of priority to some of the keys. The key-tops are removed by gripping the key-top between your fingers and pulling straight away from the panel. When replacing the key-top, be sure that the lens area goes over the LED at the lower part of the key.

Some of the keys of the keyboard area of the encoder may have labels inserted inside them. The RESET, CLEAR ENTRY, ENTER, ALERT, and SEND keys all have slots on their left side to allow small thin labels to be inserted.

THE CLOCK OPTION

The 24-hour clock option may be added to the encoder at any time. With the clock option, the encoder will print the starting and ending time of a call sequence to the call log (when enabled). On the hour, the date will be printed as well. The hours and minutes will be displayed on the encoder display during idle periods.

The installation of the time clock board involves removing and opening the encoder unit. The subsection 'Inside the Encoder' describes the procedure for opening the Model 25. BE SURE POWER IS REMOVED before installing the clock board.

The time clock board (702-9028) plugs into socket, J3, of the encoder digital board (702-9022). When plugging the board in, be sure that all 15 pins on the clock board find their receptacle in socket J3. The clock board mounts to the digital board via the two male-female threaded spacers included with the clock board option. If not already installed, these spacers should replace the #4 Phillips head screw securing the center of the digital board and the screw securing the upper left-hand corner of the digital board (near socket U1).

The battery cell on the clock board is present to maintain the time/date during power failures. This battery should last several years if main power to the encoder is fairly reliable. However, if the encoder is ever removed from service for an extended period (more that a few days), it is recommended to disable the battery so as to prevent its premature discharge. The battery is enabled and disabled via jumper JP4 on the clock board (702-9028). In the 'A' position, the battery is enabled. In the 'B' position, the battery is disconnected. If the battery should ever become discharged, it should be replaced with a Matsushita BR2325 3-volt lithium cell or an equivalent battery.

SOFTWARE CHANGES

The software and formats of the encoder are contained in two 28-pin EPROMs. When new formats or software changes are added to the encoder, the EPROMs U6 and U8 on the encoder digital board (702-9022) must be changed. When the new EPROMs are received from our factory, they should replace the EPROMs currently in the encoder, and the old EPROMs should be sent back to us. The procedure for changing EPROMs is outlined below.
OBSERVE STATIC DISCHARGE PRECAUTIONS.

1. Remove power from the encoder. Remove the encoder from the console. Open the encoder to expose the encoder digital board (see subsection 'Inside the Encoder').

2. Carefully, and without bending their pins, remove the old 28 pin EPROMs from sockets U6 and U8 of the encoder digital board (702-9022). These devices may be damaged by static so avoid touching their pins.

3. Place the new EPROMs, labeled U6 and U8, into the sockets with the corresponding labels. NOTE: these devices must be oriented in the proper direction or they will be destroyed. The notch in one end of the device must match the notch in the destination socket. The notch must face the top of the digital encoder board. Be sure that the pins of the EPROMs do not bend out or under when the devices are pressed into their sockets.

4. Once you are certain that the EPROMs have been properly installed, you may reassemble the encoder. Before reinstalling, you may wish to verify proper installation by applying power and watching for the display segment test. If the encoder does not execute the power-on test, or if the power-on test fails, then it is likely that the EPROMs are improperly installed. After reinstalling, the encoder parameter memory will need to be partially cleared and reprogrammed. The block/format, remote control, and send parameters must be cleared and reprogrammed or the encoder will not operate properly. The clearing process is described in detail in the Programming Guide, but in short the process consists of entering the clear mode and selecting the 'CLEAR SECTIONS 2, 5, AND 6' option by keying in the selection number '1'. The programming of the tone format selection, remote control, and general and send button setup is described in detail in the Model 25 Programmable Encoder Programming Guide (Part No. 025-9057).

5. The new EPROMs may contain upgraded versions of the operational software. If the operational software has changed, then a description of the changes will have been included with the new EPROMs. The operation change description should be attached to this manual. In some cases, new manuals will be included with the EPROMs, in which case the new manual would supersede this manual.

6. Pack the old EPROMs into the shipping tube in which the new EPROMs were sent, and secure the tube ends so that the devices will not fall out. Ship the old EPROMs back to Zetron in order to avoid the EPROM retention charge.

5. AUXILIARY PANEL INSTALLATION

Installation warning 5-1

Option selection 5-2

Connecting to the encoder 5-2

Connecting power 5-3

Panel labels 5-3

Model 25 - rear view of auxiliary panel 5-4

INSTALLATION WARNING

NOTE: This equipment generates, uses, and can radiate radio frequency energy; and if not installed and used in accordance with the instruction manual, may cause interference to radio communication.

Installation of the Model 25 encoder and auxiliary panel should be accomplished by personnel with experience in selective signaling and radio dispatch console systems.

The installation of the auxiliary instant call panels consists of positioning the two option jumpers, wiring to the encoder communications loop and wiring the power. The operation of the auxiliary panel is described in the Operation Section under 'Instant Call Operation'.

BASIC FUNCTIONAL DESCRIPTION

The Model 25 system consists of the encoder enclosure, which contains an encoder circuit and an instant call panel, and possibly one or more instant call panels housed in auxiliary enclosures. The encoder circuit and the instant call panels each contain a microprocessor to control their operation. The instant call panels are connected to the encoder circuit via a RS-232 serial communications loop. The encoder and instant call panels each have a loop input and a loop output signal and these signals are chained together to form the loop. Using the loop, the encoder circuit has the capability to instruct the instant call panels to turn on, blink, or turn off certain LEDs. The encoder may also poll the panels to find which keys have been pressed.

The encoder circuit is made up of several circuit boards. These circuit boards are the digital encoder board, analog encoder board, encoder supply board, optional clock board, and depending on configuration, a front panel board. The digital board contains the encoder's microprocessor and memories and is used to control other encoder boards. This board contains circuits for driving the front panel displays, reading the front panel keyboard, monitoring the computer port, polling the instant call communications loop, controlling the tone generators, driving the relays and monitoring the channel busy inputs. The analog board is tightly coupled with the digital board since it contains the dual tone generator, relays and channel busy input circuits. The encoder supply board provides some protection at the power input and regulates the +12 VDC input to the +5 VDC used by most of the logic. The optional clock board contains a clock IC which can maintain the time and date. The clock board also contains an oscillator used as the clock's time base and rechargeable batteries for keeping the clock time/date running during power interruptions. The front panel board contains the keyswitches, keypad and electronics for driving the status and channel busy displays.

Each instant call panel consists of two boards; the instant call driver board and the instant call switch panel board. The instant call driver board contains the panel's microprocessor and memories, and is used to drive the panel's LEDs and scan the panel's keys. The driver board also contains the interface to the instant call communications loop. The instant call switch panel contains additional driving and scanning circuits and also contains the keyswitches and their integral LEDs.

This page is intentionally blank.

SYSTEM BLOCK DIAGRAM

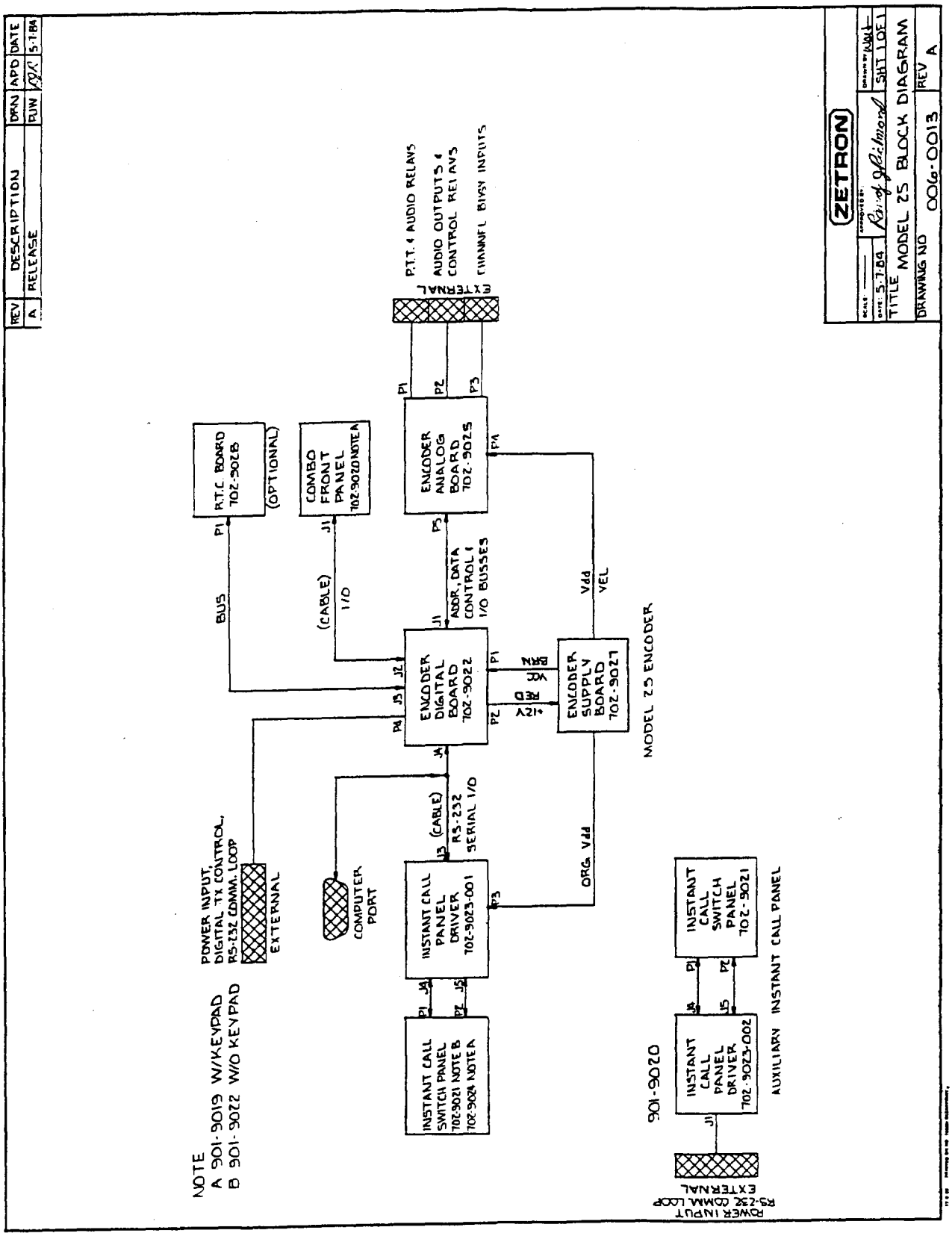

DIGITAL ENCODER BOARD BLOCK DIAGRAM

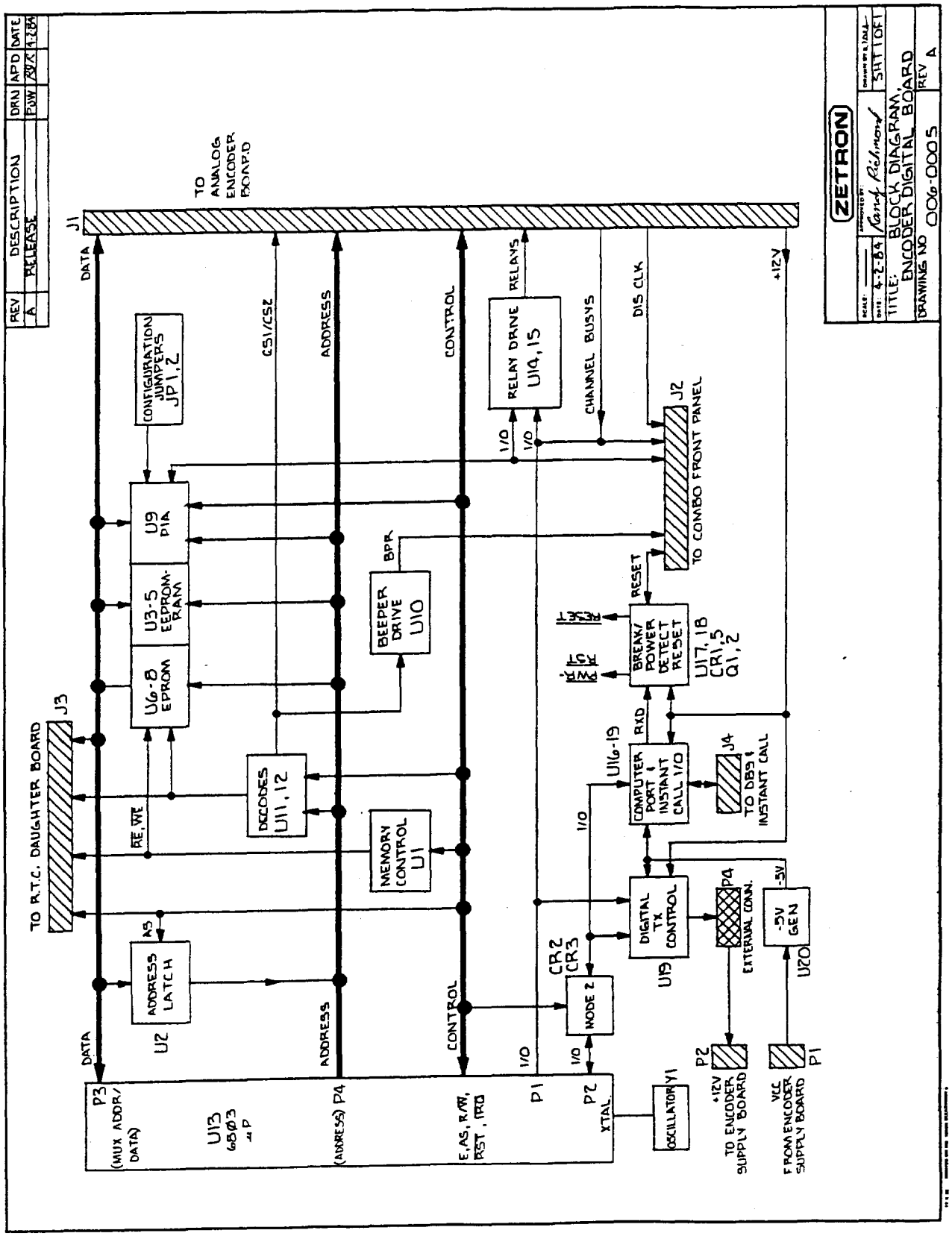

DIGITAL ENCODER BOARD

Microprocessor Control

The encoder's microprocessor, U13, contains built-in parallel input/output (at U13 pins P1 and P2), serial input/output (at U13 pins P2), RAM and timer. The crystal oscillator made up of Y1 is the microprocessors clock from which the serial input/output (I/O) baud rate is derived. The fundamental frequency of the oscillator is divided by four and is sent out of the microprocessor's "E" pin to be used as the master clock for the whole encoder and especially for the tone generator. The microprocessor presents the eight upper address lines of its 16-bit address but to the 'P4' pins if U13. The 'P3' pins of U13 contain the multiplexed eight bit data bus and lower eight bits of the address bus. Address latch, U2, is used to latch the lower address signals from the multiplexed bus. Some of the 16 bits of the address bus is then decoded by decoders, U11 and U12, to create the chip selects for the memories and peripheral ICs.

Reset Circuit

When power is applied to the encoder, the reset bus is held at the reset state while capacitor, C17, charges via resistor, R11. After about 0.1 seconds the R-C has charges enough to release the reset condition via gates U17 and U18. On the transition from the reset to the not-reset state, the microprocessor will latch its operating mode on the levels present at its pins P20, P21, and P22. Diodes CR2 and CR3, capacitors C9 and C10 and resistor RP3 ensure that the operating mode is mode two (P20, P22 = low state, P21 = high state). If the microprocessor is latched into the wrong operating mode, the configuration of its pins may change and thus render the microprocessor useless as far as the circuit is concerned. When the mode has been latched, the microprocessor will begin execution of the memory. The reset bus also travels to the peripheral ICs, clock board, and front panel. When the front panel is reset, all of its indicators will go to the off state. Also, all of the input/output (I/O) pins of the peripheral ICs will become high impedance so that the pull-up resistors will turn the tone enables and relays to their off state.

There are several additional ways for the encoder to become reset. A press of the front panel RESET key will cause C17 to discharge thus causing reset. If the +12 VDC power drops below about 8.5 volts, the circuit made up of CR5, R13, R12, Q2, R10, Q1, and RP1 will also discharge C17 causing reset. Lastly, a break level at the RXD (receive data) signal lasting 1.5 seconds will cause capacitor C8 to discharge via CR1 and U18, also causing reset.

Memory
Socket U5 contains one 8K x 8 nonvolatile RAM (Random Access Memory). The nonvolatile RAM may be written into while power is applied, and will retain the stored field programmed parameters once the power is removed from the encoder. The RAM holds temporary operational parameters. Sockets U6 and U8 contain one 8K x 8 and one 32K x 8 EPROMs (Erasable Programmable Read Only Memories) which hold the operational software and format specifications of the encoder. The contents of the EPROMs cannot be modified by the encoder. The memory controller gate, U4, determines when the memory is enabled for reading and when it is enabled for writing. Gate U4 protects the nonvolatile memory from being corrupted during power transitions. Switch JP3 is used to enable or disable writing to the nonvolatile memory.

Front Panel Input/Output (I/O)
Peripheral IC U9 is used to scan the front panel keyswitches and feed the serial data to the front panel display's serial shift registers. Microprocessor I/O pin 'P14' is used to clock the channel busy display serial shift register. A peripheral IC on the analog board is used to clock the status display serial shift register. The keyboard scanner, U9, will drive one of the row scan lines (S0-S4) at a time and monitor all of the column return lines (R0-R4). In this way, the X-Y keyswitch matrix on the front panel can be scanned for a row-to-column connection (switch closure).

Relay I/O
Peripheral IC U9 is also used to control some of the relays on the analog board via buffers U14 and U15. The Microprocessor also drives two of the analog board relays with its I/O pins. ICs U14 and U15 are open collector buffers which can pass the 35 milliamperes required by the relays.

Computer Port and Loop I/O
The digital board contains the interface for the computer port and instant call loop port. These two RS-232 compatible ports are multiplexed into the single serial I/O port of the microprocessor. IC U16 is a RS-232 receiver and U19 is a RS-232 transmitter. The power for the RS-232 transmitter is derived from the incoming +12 VDC and the -5 VDC generator, U20. The multiplexing operation is performed by the signal 'RMT-CTL'. When RMT-CTL is at or below ground (RS-232 'mark' level) the serial port is enabled onto the loop connections labeled 'DOUT' and 'DIN'. When RMT-CTL is above ground (RS-232 'space' level) then the port is only operational at the computer port signals labeled 'TXD' and 'RXD'. Capacitors C14 and C18 serve to reduce the noise-causing slew rate of the RS-232 transitions. Gates U17 and U18 are used to multiplex the serial port input. The signal 'CTS' may be monitored by the microprocessor for the purpose of halting serial port transmission. The signals labeled 'Digital Data' and 'Digital Mode' are reserved for future digital transmitter control.

Beeper Driver
Flip Flop U10 is used to drive the encoder beeper (on the instant call driver board) and the front panel decimal point. When the flip flop is clocked by accessing a certain address, the output will toggle its state. The software of the encoder may clear the flip flop without keying a relay by issuing a pulse of very short duration (10 microseconds). The toggle and the clear allow full control of the flip flop output state.

ANALOG ENCODER BOARD BLOCK DIAGRAM

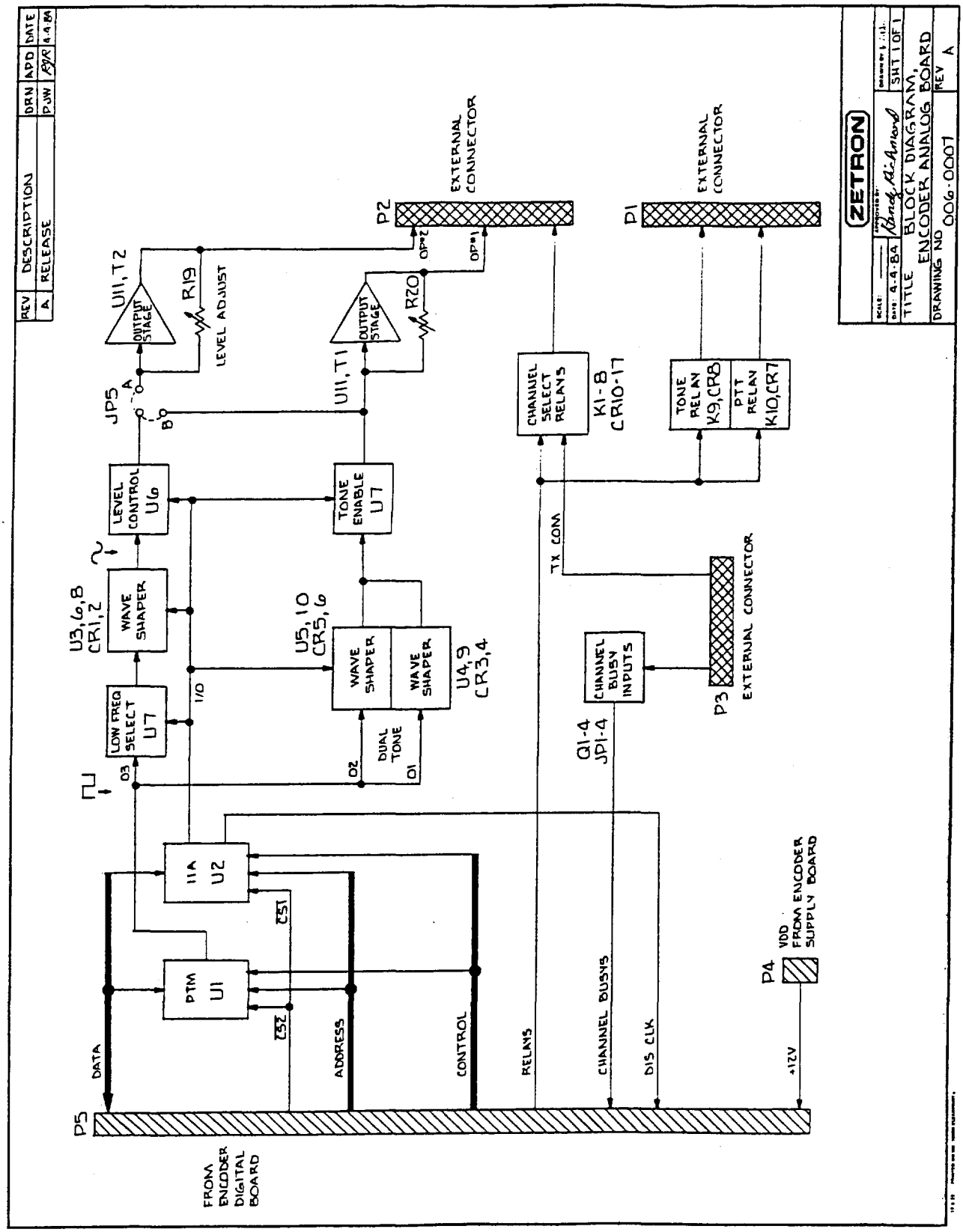

ANALOG BOARD

Channel Busy Inputs

Buffer U11 is used to monitor the voltage present at the channel busy inputs. Resistor array, RP4, is the open collector pull-up. Resistors R45-R48 are base current limiting resistors. Capacitors C25-C28 are present to limit transitional voltage spikes which could otherwise damage the buffer. Resistor array RP5, via jumpers JP1-JP4, may be used to pull the inputs up to the normally inactive state. The open collector signals from the buffer outputs are monitored by the digital board microprocessor I/O pins.

Relays

Relays K1-K8 are S.P.D.T. relays wired in a normally-open, closing-to-common configuration. Relays K9 and K10 are D.P.D.T. relays with all contacts available at connector P1. The P.T.T. relay, K10, is spike protected by the R-Cs made up of R24-R27, C7-C10. Diodes CR1, CR2, CR8-CR15 are used to clamp the back EMF generated when the relays are de-energized. The exact timing of these relays during normal operation may be found at the end of the Operation Section.

Tone Generators

The analog board contains two tone generator circuits. The tone generation circuits can be broken down into two main sections; the digital control and analog sections. The digital control consists of timer U1 from which the base frequency is generated, and peripheral U2 which controls the tone bands and tone enables. These two ICs are directly controlled by the microprocessor on the digital board. The analog section consists of programmable current sources U4 and U3, ramp-wave generators U5 and U6, sine-wave converters U5 and U6, tone enable gate U8, and output amplifier U9.

Timer U1 generates two simultaneous square waves from the pins 'O1' and 'O2'. The high portion of the square waves are pulled close to the Vcc voltage by resistors R34 and R33. The square waves are A.C. coupled to the analog section by capacitors C1 and C2. In order to produce a ramp-wave of the proper amplitude at pin 1 of op-amps U5 and U6, the slew rate of the current sources must be made to match the desired frequency. Peripheral U2 selects the proper current resistor from R1 through R16 via the analog multiplexers U4 and U3. The ramp-wave at pin 1 of op-amps U5 and U6 then have their bottoms and tops clipped by the action of diodes CR3-CR6 in circuit with the later stages of op-amps U5 and U6. The resultant wave shape very closely approximates a sine wave. The two sine waves are then summed together before going through the analog enabling gate U8. The other side of U8 feeds output amplifier op-amp U9. Resistor R23 is in the feedback loop of U9 in order to prevent the output from clipping due to too much amplitude. Resistor R22, which is removable, is used to reduce the output adjustment range for applications that require less audio level. Capacitors C16, C17 and JP5 allow pre-emphasis or de-emphasis of the frequency-vs-amplitude curve.

When the two tone circuits are used for single tone generation, the timer outputs 'O1' and 'O2' are generating square waves of the same frequency and with no phase difference. When the two generators sum their sine-waves, the resultant output is twice that which can be achieved by operating only one tone generator. For dual tone generation, such as with the DTMF or Quick Call 1 formats, the timer will generate two separate square waves with different frequencies. The summed dual tone sine-waves will then never have a peak value greater that of the single tone generation. When the encoder is not generating encoding tones, the timer is outputting 1000 Hz square waves which is used to charge the tone circuits all the way up to the tone enable gate U8 (U8 is disabled unless encoding tones are being generated). When encoding tones are started from this circuit, the peripheral U2 will not enable the analog multiplexers, or select the proper resistor until the square wave has been generated for one quarter of its period.

This page is intentionally blank.

COMBO FRONT PANEL BOARD BLOCK DIAGRAM

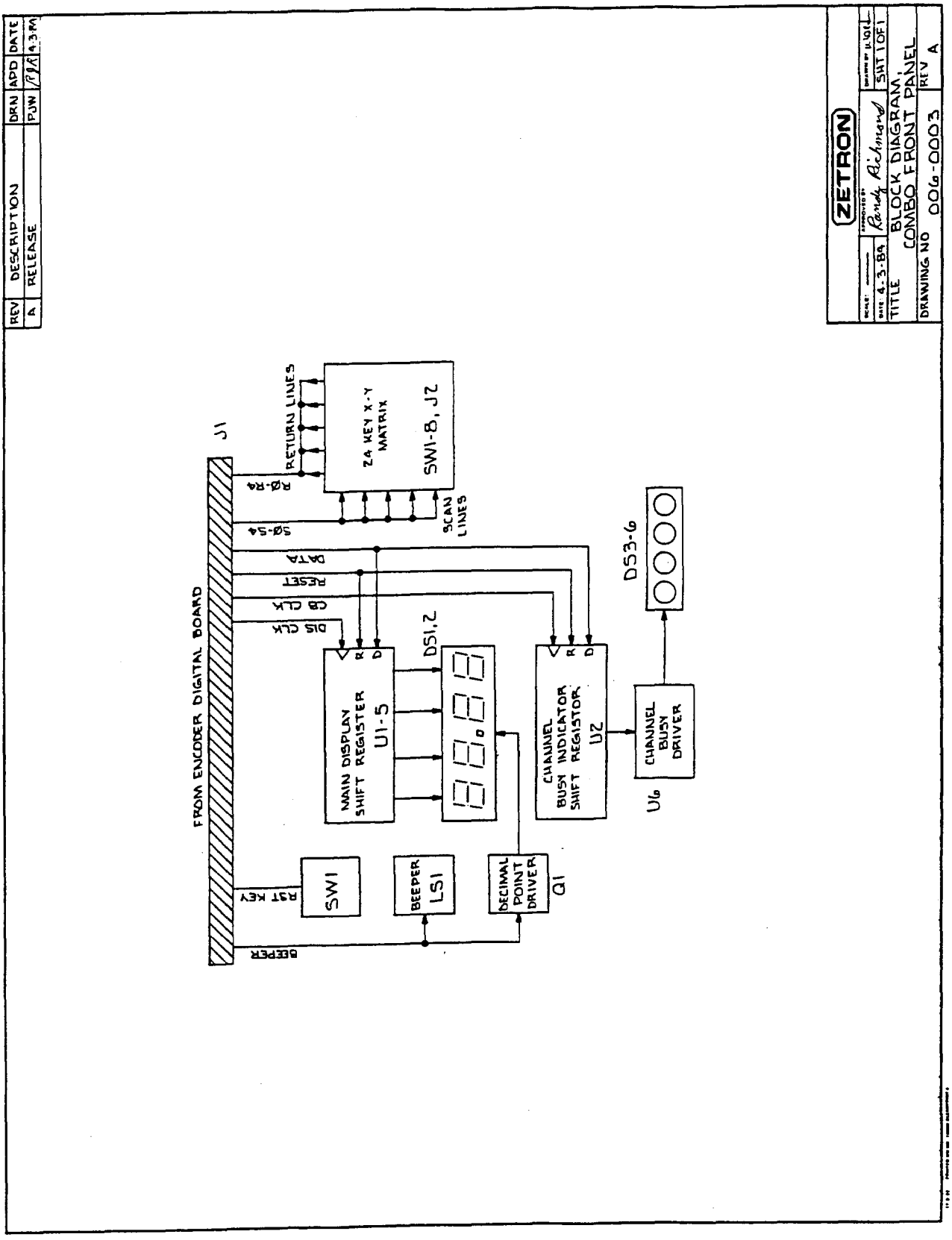

FRONT PANEL BOARD

The front panel board consists of a status display section, channel busy indicator section, and a keyswitch section. The 16-key keypad and the 8 other keys form an X-Y matrix that is scanned by the row and monitored by the column by the digital board. Seven of the eight individual keys are D.P.S.T. and are wired in parallel for more reliable operation. Half of the RESET key is part of the matrix but the other half is used to close the reset signal to ground when the key is pressed. The seven-segment displays DS1 and DS2 are driven by current limited CMOS shift registers. The outputs of the shift registers are cleared by a reset signal. The channel busy indicators are driven by U6 in order to gain more brightness. Driver U6 is feed by half of shift register U2. The shift register data is fed by a common data signal but the different LED sections are clocked by different signals. Transistor Q1 drives the middle decimal point of the displays using the beeper signal. The beeper is not generally installed on this board. All of the signals to and from this board are connected to the digital board via an eighteen-conductor ribbon cable.

CLOCK BOARD BLOCK DIAGRAM

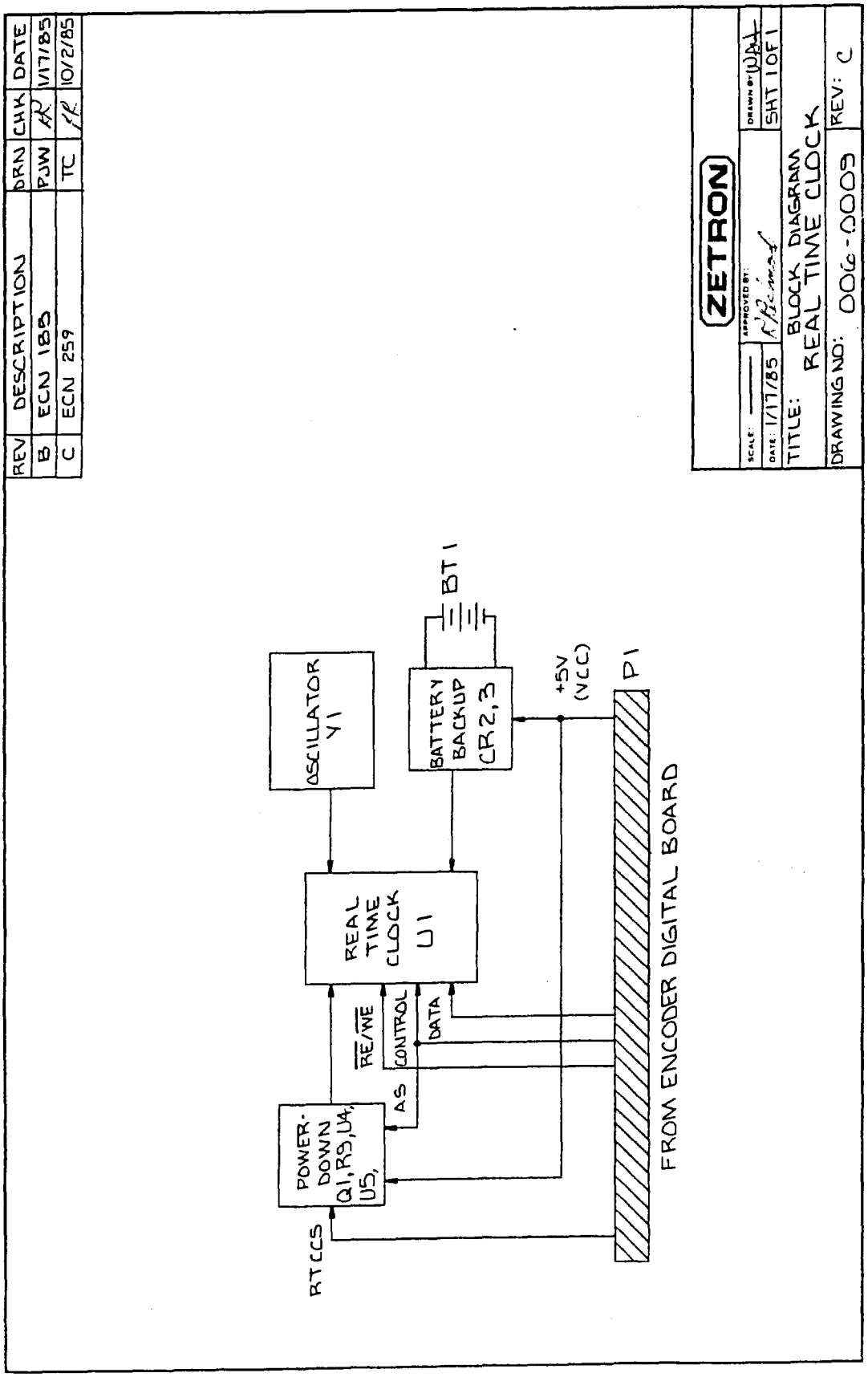

CLOCK BOARD

The heart of the optional clock board is the clock chip, U1. An accurate oscillator for U1 is provided by the time base Y1, capacitors C1 & C2 and resistors R1, R2 & R3. Regulator U5 and transistor Q1 form a power-down-detection circuit. When the supply to the clock board drops below 4.75 volts (threshold set by the trimmer pot), Q1 shuts off and resistor R6 grounds the chip select enable signal to U4, via U2 or U3, on the next microprocessor cycle. Either U2 or U3, but not both, are installed. This transparent latch IC is used to synchronize the chip select to the microprocessor's clock. This prevents bad data from corrupting the clock during microprocessor power transitions. When not powered, CR3 provides battery power to the clock chip. Pull-ups RP1 and diode CR1 are present to be sure that the HMOS microprocessor data bus meets the voltage input requirements of the CMOS clock chip.

ENCODER SUPPLY BOARD

The raw +12 VDC encoder supply voltage is brought into the supply board on red and black wires via a RFI noise filter. The power then passes through fuse F1 and is spike clamped at transient absorber RV1. Diode CR1 protects the encoder from reverse supply voltage. The protected +12 volt supply then goes to the instant call driver board and the analog board. Regulator VR1 converts the protected +12 volts to +5 volts which goes to the digital board. Capacitors C2 and C3 are necessary to prevent the regulator from possibly oscillating. Resistor R1 is used to bleed the supply in the event that it is disconnected from the other boards.

INSTANT CALL PANEL DRIVER BOARD BLOCK DIAGRAM.

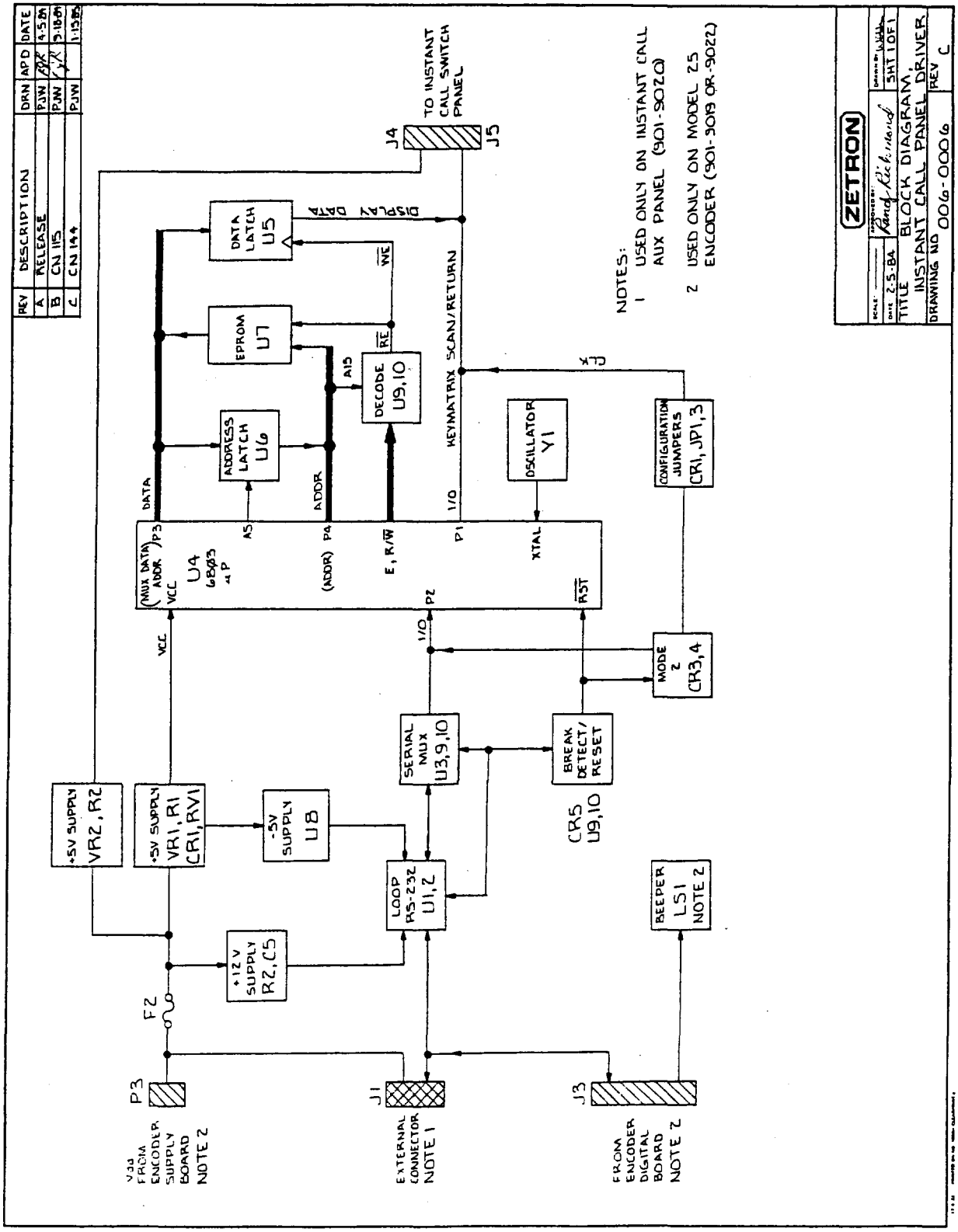

INSTANT CALL PANEL DRIVER BOARD

Microprocessor Control

The instant call panel's microprocessor, U6, contains built-in parallel input/output, serial input/output, RAM, and timer. The crystal oscillator made up of Y1 is the microprocessor's clock from which the serial input/output (I/O) baud rate is derived. The microprocessor provides a non-multiplexed address and data bus. The processor stack and variable memory is stored in the 2K x 8 RAM, located at position U3. The 16K x 8 EPROM program memory is located at U2.

Reset Circuit

When power is applied to the encoder, the reset bus is held at the reset state while capacitor, C18, charges via resistor, RP1. After about 0.1 seconds the R-C has charged enough to release the reset condition via gates U10 and U9. On the transition from the reset to the not-reset state, the microprocessor will latch its operating mode on the levels present at its pins P20, P21, and P22. Diodes CR3 and CR4, and resistor RP1 ensure that the operating mode is mode two (P20, P22 = low state, P21 = high state). If the microprocessor is latched into the wrong operating mode, the configuration of its pins may change and thus render the microprocessor useless as far as the circuit is concerned. When the mode has been latched, the microprocessor will begin execution of the memory U8.

Loop Input/Output

The interface to the instant call communications loop consists of an RS-232 port. The signals labeled 'LOOP IN' and 'LOOP OUT' form the instant call loop port used by this board. IC U1 is an RS-232 receiver. IC U2 is an RS-232 transmitter which transmits using +12 volts filtered by R-C R2 and C5 and using -5 volts converted from +5 volts by U8, C12 and C20. A break level at the 'LOOP IN' signal lasting 0.15 seconds will cause capacitor C16 to discharge via CR5 and U1 thus causing the panel driver to reset. The reset signal also travels to the 'LOOP OUT' signal via U2 so that the encoder can reset all members of the instant call communications loop by issuing a long break level on the loop. When the driver board resides in the encoder enclosure, it is connected to the digital board at connector J3 via a 7-conductor cable. When the driver board resides in an Auxiliary panel, it is connected to the communications loop via connector J1.

Beeper

An audio transducer (beeper) is present on the instant call driver board which resides in the encoder enclosure. The beeper is in series with capacitor C11 in order to prevent the driver circuit on the digital board from driving a DC short circuit.

Instant Call Switch Panel I/O
The instant call driver board drives and monitors the instant call switch panel board via several I/O pins. Data latch U1 supplies the data for the LED latched. Microprocessor I/O pin 'P21' is the clock signal for the LED driver latches on the instant call switch panel board. Microprocessor I/O bus 'P6' is used to steer the clock signal to the proper LED column driver latch. 'P6' is also used to scan the key switch matrix. The result of the key matrix scan is returned on the microprocessor pin 'P67'.

Power Regulators
The power input comes either from connector P3 or J1. The power is then passed through fuse F2. Transient absorber RV1 is used to clamp any high voltage spikes. Diode CR2 prevents reverse power from damaging the driver board. Resistors R1 & R2 are used to reduce the amount of power dissipated by the 5-volt regulators VR1 & VR2. Regulator VR1 supplies the logic on this board. Regulator VR2 supplies the power for logic of the board attached to connector J4/J5.

This page is intentionally blank.

INSTANT CALL SWITCH PANEL BOARD BLOCK DIAGRAM

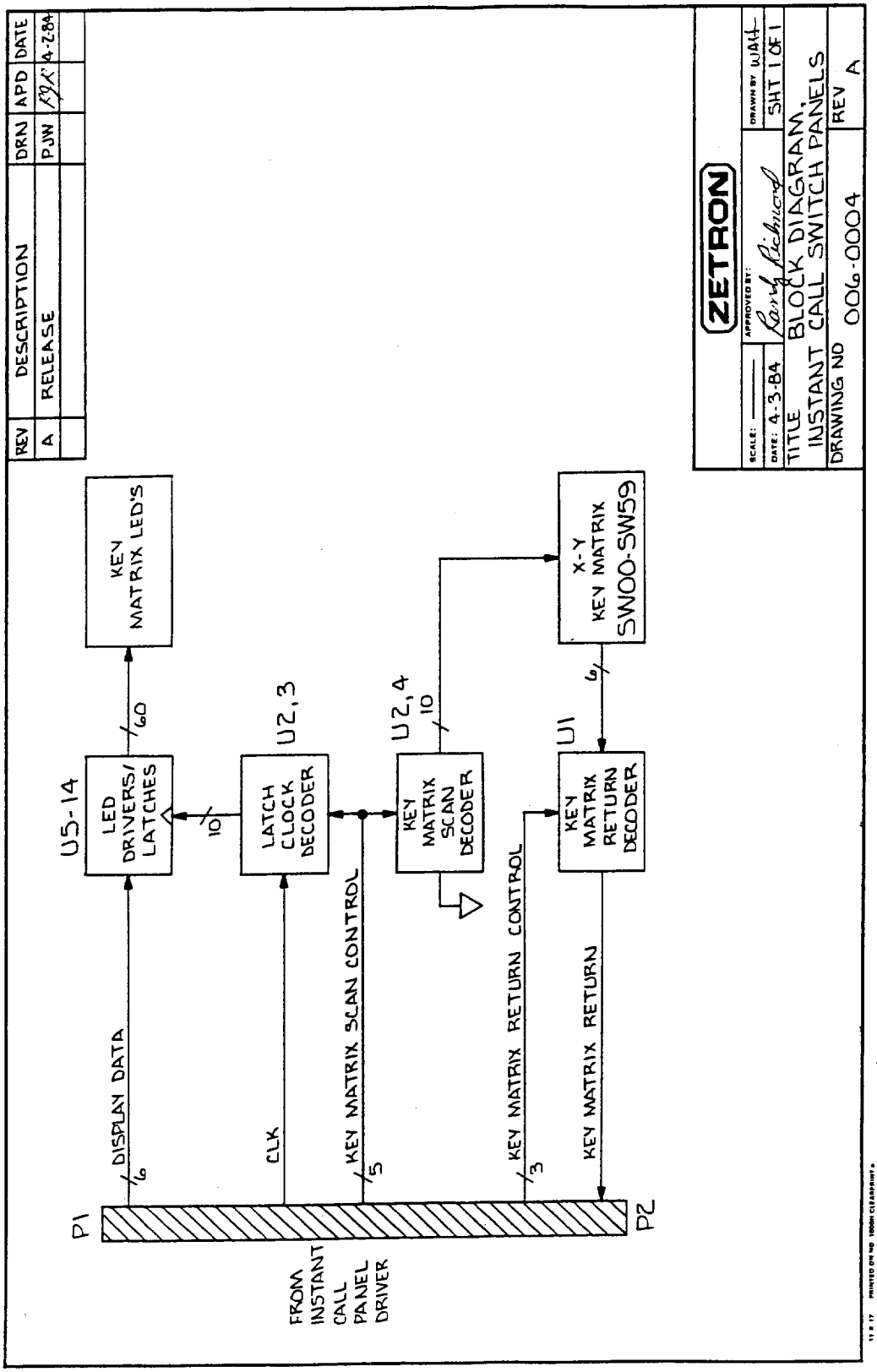

INSTANT CALL SWITCH PANEL BOARD

The instant call switch panels boards come in two sizes; full sized (60 keys) and half sized (30 keys). The circuit boards of the two different switch panels are nearly identical except that some resistors and keyswitches are missing on the half sized (mini) switch panel. These two panels share a common circuit description and schematic diagram. The instant call switch panel board connects the driver board at connectors P1 and P2 which are two rows of long stakes. Most of the signals at P1 and P2 are pulled up using resistor arrays RP2 and RP1 in order to prevent static electricity from harming the CMOS ICs on the board. Data latches U5 through U14 are the LED column drivers. Resistors R2 through R66 limit the amount of current driven through the LEDs. Analog multiplexers U2 and U3 steer the latch clock signal 'CLK' using the encoded scan signal 'SA', 'SB', 'SC', 'SD' and 'SD not'. Analog multiplexers U2 and U4 are used to drive one of the switch matrix columns. The steering of the driven column line is done by the encoded scan signal. Analog multiplexer U1 is used to connect one of the switch matrix rows to the monitored signal 'COM'. The encoded scan lines 'RA', 'RB', and 'RC' connect to U1 to accomplish the steering of the row to the monitored signal 'COM'. The -5 volt supply on the driver board is connected to all of the analog multiplexers to reduce their on-resistance. Pull up resistors RP1, RP4, R9, R11 and R67 keep the unscanned columns and rows at the inactive state.

7. TROUBLESHOOTING

Power-on self-test 7-1

Continuous self-test 7-4

Instant call key test 7-5

Encoder fault identification 7-6

Instant call fault identification 7-10

Parts lists, schematics, parts identification 7-12

Interconnect diagram 7-13

Encoder with keypad parts list (901-9019N) 7-14

Aux instant call panel parts list (901-9020G) 7-16

Encoder w/o keypad assy parts list (901-9022L) 7-17

Encoder supply sub-assy parts list (815-9008C) 7-19

Digital board schematic (008-9022L) 7-20

Digital board parts I.D. (702-9022L) 7-21

Digital board parts list (702-9022L) 7-22

Analog board schematic (008-9025G) 7-24

Analog board parts I.D. (702-9025G) 7-25

Encoder analog board parts list (702-9025G) 7-26

Front panel board schematic (008-9020A) 7-28

Front panel board parts I.D. (702-9020A) 7-29

Combo front panel parts list (702-9020A) 7-30

Encoder supply board schematic (008-9027C) 7-31

Encoder supply board parts I.D. (702-9027C) 7-32

Encoder supply parts list (702-9027C) 7-32

Continued ...

7. TROUBLESHOOTING
(cont'd)

Instant call driver board schematic (008-9023-1G) 7-33

Instant call driver board schematic (008-9023-2J) 7-34

Instant call driver board parts silkscreen (702-9023-1G/-2J)..... 7-35

Instant call panel driver parts list (702-9023-1G) 7-36

Instant call panel driver parts list (702-9023-2J) 7-38

Instant call switch panel schematic (008-9021A) 7-40

Instant call switch panel parts I.D. (702-9021B.1) 7-41

Mini instant call panel parts I.D. (702-9024B) 7-42

Instant call switch panel parts list (702-9021B.1) 7-43

Mini instant call switch panel parts list (702-9024B.1) 7-43

Real time clock board schematic (008-9028G) 7-44

Real time clock board parts I.D. (702-9028G) 7-45

Real time clock parts list (702-9028G) 7-46

Spare parts kit parts list (951-9002F) 7-47

POWER-ON SELF-TEST

By design, the Model 25 is software-intensive in order to minimize the number of components that may fail. The built-in self-test, which is automatically run when the encoder is powered-on, checks the displays, internal digital circuitry (microprocessor and memories), and displays the results on the front panel using the encoder status display and the Instant Call LEDs. As the test is taking place, the status display will show a single rotating LED segment and then the number of the test being run. The Instant Call panels will illuminate their LEDs first by the column then by the row while the test is taking place. By exercising the displays, the encoder allows the operator to verify the LEDs.

If a test reveals a fault in the encoder or Instant Call panel, then the encoder will halt the test and begin to beep and flash the word "Errx" ('x' is the error number). If the fault is found on an Instant Call panel, then the faulty panel will have some of the LEDs in its right hand column on, one of which will be the CLEAR key's LED. In most error cases, the encoder will not operate until the fault is repaired. In the case of a loop fault or Instant Call fault (Err0), the encoder may be operated from the keypad after the RESET key has been pressed, but the Instant Call panels will be disabled until the power is removed and fault repaired. The instant call panels may be enabled again by using the 'port enable' feature (described in the Installation Section) instead of removing power. The possible error numbers and their probable causes are shown below.

ENCODER ERROR CODE	PROBABLE FAILURE CAUSE
Err0	Instant Call Panel(s) or Loop connection(s). Digital Bd: U20, U14, U16-U19, J4, C18, RP1, RP2. Driver Bd: U8, U1-U4, U9, J3, J1.
Err1	Wrong microprocessor mode. Digital Bd: CR2, CR3, RP3, U13, C9, C10, R7, U14, RP1, U19.
Err2	Microprocessor software memory (EPROM) bad. Digital Bd: U6-U8, U1-U5, U12, R2.
Err3	Microprocessor temporary memory (RAM) bad. Digital Bd: U13.
Err4	Time clock board bad. Time clock Bd components.
Err5	Microprocessor/Peripheral interrupts bad. Digital Bd: U13, U9, RP2, J1. Analog Bd: U1, U2, P5.
Err6	Digital operational memory bad. Digital Bd: U5, U1-U4, U12, U18, R3.
Err7	Front Panel / Relay driver I/O bad. Front Panel Bd. components / cable. Digital Bd: U9, RP3, J2, U10-U15.
Err8	Tone control I/O bad. Digital Bd: U11, U12, J1, J2. Analog Bd: U1, J2, RP1-RP2, U3-U7.
Err9	EEPROM parameter storage memory bad. Digital Bd: U3-U4, U1-U2, U5, U12, U18, R3 or program Enable/Disable switch,JP3 is in the wrong position.

If the encoder displayed the loop error code, "Err0", then one or more Instant Call panels may have faults. If an instant call panel detects a fault within its own circuitry, it will illuminate one or more LEDs in the right-hand key column. The following table describes the error indication and the probable cause.

INSTANT CALL ERROR CODE (right LED column)	PROBABLE FAILURE CAUSE
* (on)	Microprocessor temporary memory (RAM) bad.
* (on)	Driver Bd: U4.
* (on)	
* (on)	
* (on)	
* (CLEAR key on)	
o (off)	Microprocessor software memory (EPROM) bad.
* (on)	Driver Bd: U7, U6, U10, U9.
* (on)	
* (on)	
* (on)	
* (CLEAR key on)	
o (off)	Microprocessor timer bad.
o (off)	Driver Bd: U4.
* (on)	
* (on)	
* (on)	
* (CLEAR key on)	
o (off)	Panel driving I/O bad.
o (off)	Driver Bd: U4, U9, U3, RP1, CR3, CR4, J4, J5, U8.
o (off)	Switch Bd. component(s) bad.
* (on)	
* (on)	
* (CLEAR key on)	
o (off)	Microprocessor mode wrong.
o (off)	Driver Bd: CR3, CR4, U4, RP1.
o (off)	
o (off)	
o (off)	
* (CLEAR key on)	

CONTINUOUS SELF-TEST

After the self-test has completed at power-on, the encoder will enter the idle state, in which a limited self-test is continually being executed. Faults found in the idle state test are indicated in the same way as the power-on self-test. A more complete, continuous self-test, like that of the power-on test, may be initiated from the keypad at any time. The continuous self-test is started by holding down the RESET key then the '#' key. The RESET key is then released while the '#' key is down and when the display changes to "PrOG", the '#' key may be released. The continuous self-test will then begin. The continuous self-test will execute until a fault is found or until the RESET key is pressed.

The continuous self-test will enter a different mode if a keyboard key, other than RESET, is held down for one complete encoder test cycle. This mode tests the keyboard keys, tone output and eight control relays. After the new mode has been invoked, a press of any keyboard key should cause its character to be displayed while it is held down. The 16 keys of the DTMF pad show a single character representation, but the other keyboard keys show the two character representations in the table below.

KEY	DISPLAY
SEND 1 (top send key)	S1
SEND 2	S2
SEND 3	S3
SEND 4 (bottom send key)	S4
ALERT	AL
ENTER	En
CLEAR ENTRY	CE

Also whenever a key is depressed, one of the eight control relays should close. When a key is released one of eight tones should appear at the tone output. When a key is released a four digit code will take the place of the key character in the display. The code can be used to determine which control relay should be closed and what frequency should be present at the tone output. The following table shows the displayed code verses the tone frequency and control relay closed. The order of the table is the order in which the tones and relays will progress upon each momentary key closure.

CODE	TONE FREQUENCY (+/- 1%)	CONTROL RELAY
0150	293.0 Hz	1
0100	439.0 Hz	2
0082	536.0 Hz	3
0068	646.0 Hz	4
0047	935.0 Hz	5
0033	1332.0 Hz	6
0022	1831.0 Hz	7
0010	2929.0 Hz	8

When a key is again depressed the character code should display, the tone output should turn off and the next control relay should close. When it is again released, the display should change to the next code and the next tone should be present at the output. When the test tones are being generated, an oscilloscope on the tone output should show a waveform very close to a sinewave. Each successive tone generated by the momentary key depression should be of approximately the same amplitude (within 1 dB) unless pre-emphasis or de-emphasis is used.

INSTANT CALL KEY TEST

While the encoder's continuous self-test is executing, the Instant Call panels will also execute a continuous self-test. This Instant Call self-test can be changed to an Instant Call key test. The Instant Call key test is initiated (only during continuous self-test) by holding down a key on the Instant Call panel to be tested. The key will need to be held down for one complete test cycle to be acknowledged. When the key test begins, the key pressed and the CLEAR key of the panel will now begin to blink. The blinking indicates that the key test is now executing. Now a press of a key whose LED is off will cause its LED to blink. A press of a key whose LED is blinking will cause its LED to go off. In this way the key's LED can be used to verify the functionality of the key. When the RESET key of the encoder is pressed, the Instant Call panel will resume normal operation.

ENCODER FAULT IDENTIFICATION

Listed below are some possible problems and their causes to assist in troubleshooting faults. A particular problem could be caused by a component that may be on one of several circuit boards in the encoder. For this reason, the name of the circuit board on which the suspect component resides is identified and will be one of the following: Digital Bd, Analog Bd, Clock Bd, Front Panel Bd, Supply Bd, Driver Bd, or Switch Bd (Instant Call panel switch board). A diagram of the interconnection of these boards can be found at the beginning of the schematic subsection of this section. A block diagram of the system as well as block diagrams of the boards may be found in the Theory of Operation Section. The Encoder Installation Section contains disassembly instructions and a diagram showing the physical location of each board inside the encoder.

Encoder does nothing when powered on (no LEDs come on).
- Power missing or reversed or fuse, F1, blown.
- Supply Bd. or power distribution cable bad.
- Digital Bd. oscillator not operational (U13, Y1, C11, C12).
- Front Panel Bd. display not functioning (encoder operational but display does not show it, check front panel cable).
- Power too low (low power causes encoder to reset).
- Break level at computer port (break causes encoder to be reset).
- Reset key shorted on Front Panel Bd. (also check cable).
- Digital Bd. reset circuit faulty (CR5, Q1, Q2, U17, C17, ..).

Encoder illuminates some or all segments or beeper repeatedly clicks but self-test does not execute.
- Digital Bd. microprocessor not executing software (CR2-CR3, C9-C10, RP1, RP3, R2-R3, U1-U2, U6-U8, U12-U13).
- Front Panel Bd. display faulty (encoder operational but front panel or cable bad).
- Digital Bd. display driver faulty (U9, J2, U13).

Status display apparently out of control.
- Front Panel Bd. display circuitry faulty.
- Digital Bd. display driver faulty (U9, J2, J1).
- Analog Bd. display driver faulty (U2, P5).
- Cable between Front Panel and Digital boards bad.

Beeper will not sound or continuously clicks.
- Digital Bd. beeper driver faulty (U9-U11, R6, C7, J2).
- Driver Bd. beeper circuit faulty (J3, C11, LS1).
- Cable between Digital and Driver boards bad.

Beeper will not sound but display decimal point illuminates when beeper would normally sound.
- Digital Bd. connection bad (J3, or check cable).
- Cable between Digital and Driver Boards bad.
- Driver Bd. beeper circuit faulty (J3, C11, LS1).

Decimal point will not illuminate when time is displayed but beeper works.
- Cable between Digital and Front Panel boards bad.
- Front Panel bd. decimal point driver bad (Q1, R9, R10, DS1, J1).

Encoder does not detect some or all keypad keyswitches.
- Digital Bd. keypad jumper, JP2, in the disabled position, 'A'.
- Digital Bd. keyboard scanner faulty (U11, U9, J2).
- Cable between Digital and Front Panel boards bad.
- Front Panel Bd. keyswitches bad.

Time clock gains or losses time.
- Clock Bd. oscillator off frequency (C3, C2, U2, R4, R5, Y1).

Time clock does not remember time during power failures.
- Clock Bd. batteries discharged (BT1, BT2, BT3).
- Clock Bd. charging circuit bad (CR3, CR4, R6).

Time will not display with clock option installed.
- Clock Bd. not properly seated on connector J3 on Digital Bd.
- Digital Bd. chip select circuit bad (U12, U18).
- Clock Bd. chip select circuit bad (R1-R2, Q1, U1, CR2, RP1, CR1).

Encoder apparently does not retain its programming during power interruptions.
- Severe power spikes on incoming power during power transition.
- Digital Bd. write protection circuit bad (U1-U4, Q1-Q2, U12, U17-U18, R2-R3, R11, CR5, C17). The Enable/Disable switch, JP3, may provide additional protection from power electrical disturbances.

Encoder apparently does not retain its programming even when power is continuous.
- Severe power spikes on incoming power.
- Digital Bd. EEPROM circuit bad (U1-U4, U12, R2, R3).

Encoder never emits tone from tone output.
- Digital Bd. controls bad (U11, U12, J1).
- Analog Bd. tone generator bad (all but relay and channel busy sections of Analog Bd.).

Encoder always emits tone from tone output.
- Digital Bd. controls bad (U11, U12, J1).
- Analog Bd. tone controls bad (U3, U4, U8, U2, RP2, P5).

Encoder tone output oscillates at a high frequency (above audio).
- Analog Bd. output amplifier bad (T1, U5, U6, U9)
- Analog Bd. bias supply bad (U9).

Encoder tone output at too high or too low an output level or tones are distorted.
- Analog Bd. tone generators bad (all but relay and channel busy sections of Analog Bd.).

Encoder tone output off frequency with 1206 Hz alert tone or deviation test tones.
- Digital Bd. crystal oscillator off frequency (C11, C12, Y1, U13).

Some or all relays stay closed or will not close.
- Digital Bd. relay driver bad (U9, U11, U12, U14, U15, RR3, J1).
- Analog Bd. relay(s) bad (K1-K10, CR7-CR17, P1, P2, P5).
- Power input too low.
- Programming not performed properly.

Channel busy indicators apparently out of control.
- Channel busy input floating at high impedance (check jumpers on Analog Bd.).
- Channel busy input not connected properly.
- Front Panel Bd. channel busy circuit faulty.
- Digital Bd. display driver faulty (U9, J2, U13).
- Cable between Digital and Front Panel boards bad.

Channel busy not detected or always detected busy.
- Analog Bd. channel busy circuit bad (JP1-JP4, RP7-RP8, R38-R41, Q1-Q4, C26-C29, P3, P5).
- Digital Bd. channel busy detector bad (J1, U13).
- Programming not performed properly.

Instant call panels not recognized but not indicating loop error.
- RMT-CTL signal at computer port is at wrong level.
- Digital Bd. not detecting RMT-CTL pin properly (J4, U16, U19, U14, RP1, CR2, C9).
- Computer Port cable bad.
- Serial port turned off via installation aid.
- Loop error previously occurred but was never corrected.

Loop error, "Err0", intermittent or persistent.
- Intermittent Instant Call panel loop connection(s).
- Auxiliary Panel interconnections too long.
- Intermittent electronics on Instant Call panels.
- Digital Bd. loop circuit bad (C11, C12, Y1, U13, U20, U14, U16, U19, C18, U18, U17, PR1, PR3, P4, J4).
- A device attached to the Computer Port connector is driving the RX data signal.

Characters received on the Computer Port cause the encoder to beep or behave unexpectedly.
- Serial device baud rate does not match programmed encoder baud rate.
- Serial device is not sending 8 bits with no parity.
- Computer Port RMT-CTL signal at wrong level (not in remote control).
- Serial Port turned off via installation aid.
- Loop error previously occurred but was never corrected.
- Digital Bd. crystal oscillator off frequency.
- Serial device cable too long.
- Key shorted on Front Panel Bd.
- Digital Bd. serial port bad (U16-U20, U14, C14, PR1, PR3, J4).

Can't reset the encoder using a break level on the Computer Port RX data signal, or encoder sometimes resets when it receives characters from the Computer Port.
- Serial device bad.
- Digital Bd. break detect circuit bad (U16-U18, RP1, R8, CR1, C8).

Encoder apparently not sending call status out from the Computer Port.
- Serial device bad.
- Serial device cable bad.
- Computer Port connector cable bad.
- Call logging turned off.
- Serial port turned off via installation aids.
- Serial Device baud rate does not match programmed encoder baud rate.
- Digital Bd. crystal oscillator bad.
- Digital Bd. serial port bad (U20, U19, C14, U14, RP2).
- Call logging disabled.

Pressing a keypad key causes encoder to become unresponsive or causes display to show undefined character(s).
- Digital Bd. Block/Format parameter memory changed or corrupted. This may happen if the software has been changed in the encoder (U3-U8). Fix this problem by clearing the block/format parameters and reprogramming them. Call the factory for more information.

Encoder processes calls very slowly or appears to do nothing when it should be sending.
- Encoder is in remote control and baud rate is programmed slow (150 or 600 baud).
- Instant Call stack memory has been corrupted or the EEPROM memory on the digital bd. is bad (U3, U4). If corrupted, the stack memory may be cleared and reprogrammed. For further help, call the factory.
- Call logging is enabled (this slows call processing).
- Stack delay programming too long.
- Key-up delay programming too long.

INSTANT CALL FAULT IDENTIFICATION

Listed below are some possible problems and their causes to assist in trouble shooting faults. A particular problem could be caused by a component that may be on one of two circuit boards in the panel. For this reason, the circuit board name of the component location is identified and will be one of the following: Driver Bd, or Switch Bd (Instant Call panel switch board). A diagram of the interconnection of these boards can be found at the beginning of the schematic subsection of this section. A block diagram of the system as well as the boards may be found in the Theory of Operation Section. Remember that the encoder enclosure contains a Driver and Switch board making up one Instant Call panel. Of course all Auxiliary Panels also contain a Driver and Switch board to make up their Instant Call panel.

Panel does nothing when power-on. LEDs may be on or off but do not change.
- Power missing or reversed or fuse, F2, blown.
- Driver Bd. supply bad (J1/P3, F2, CR2, R1, VR1).
- Supply Bd. or power distribution cable bad.
- Driver Bd. oscillator not operational (C7, C6, Y1, U4).
- Switch Bd. display not functioning (driver operational but display does not show it, check interconnect).
- Power too low or too high.
- Break level at loop input (break causes driver to be reset).
- Driver Bd. reset circuit faulty (U1, U10, U9, CR5, R3, C16, U10, U9).
- Panel failed self-test.
- Driver Bd. microprocessor not executing software (CR4, CR3, RP1, U3-U7, U9, U10).

Some LEDs stay on or never come on but panel passed self-test.
- Switch Bd. component(s) bad.
- Instant Call switch or switch LED bad.

One row of LEDs are unresponsive.
- Driver Bd. circuit bad (U4, J4, J5, U9).
- Switch Bd. circuit bad (P1).

One column of LEDs are unresponsive.
- Driver Bd. circuit bad (U4, J4, J5, U9).
- Switch Bd. circuit bad (RP2, U2, U3, U5-U14, R1-R66).

One or more keys can't be detected.
- Instant Call key-switch bad.

One row of keys can't be detected.
- Driver Bd. circuit bad (U4, J4, J5, U9).
- Switch Bd. circuit bad (RP1, PR2, U1, P1).

One column of keys can't be detected.
- Driver Bd. circuit bad (U4, J4, J5, U9).
- Switch Bd. circuit bad (P1, P2, RP2, U2, U4, RP4, R9, R11, R67).

LEDs come on for no apparent reason.
Instant Call key shorted or shorts intermittently.
Driver Bd. circuit bad (U4, J4, J5, U8).
Switch Bd. component bad.

Panel won't detect clear mode or address jumpers, JP1 or JP3, correctly.
Power was not removed when jumpers where changed.
Driver Bd. circuit bad (JP1, JP3, RP1, CR1, CR4, CR3, U4).

Clear mode incorrect.
Driver Bd. jumper JP3 in wrong position.

Panel sends key codes to encoder with wrong panel address.
Driver Bd. jumper JP1 in wrong position.

Lower left hand key will not cause encoder to send.
Encoder is programmed with the wrong Send-before-review mode.

Pressing a key causes its LED to come on momentarily, the encoder to beep, and the LED to go off.
Instant Call stack for that key has not been programmed into encoder.

PARTS LISTS, SCHEMATICS, PARTS IDENTIFICATION

The following pages in this section contain parts lists and schematic diagrams of the circuit boards that make up the Model 25 encoder and Auxiliary panel. Note the first diagram which shows the interconnection of the different boards in the system. For more complete details on the circuits shown here, refer to the Theory of Operation Section. The boards in the Model 25 system are listed below along with the type of panel on which it can be found.

CIRCUIT BOARD TYPE		MODEL 25 PANEL TYPE		
BOARD NAME	BOARD NUMBER	901-9019	901-9020	901-9022
Digital Encoder	702-9022-001	X		X
Analog Encoder	702-9025-001	X		X
Combo Front Panel	702-9020	X		
Encoder Supply	702-9027	X		X
Real Time Clock	702-9028	(option)		(option)
Instant Call Driver type 1	702-9023-001	X		X
Instant Call Driver type 2	702-9023-002		X	
Mini Instant Call Switch Panel	702-9024	X		
Instant Call Switch Panel	702-9021		X	X

901-9019 is the Model 25 Encoder with keypad and 29 Instant Call keys.
901-9020 is the Model 25 Auxiliary Instant Call panel with 59 keys.
901-9022 is the Model 25 Encoder without keypad/display, but with 59 Instant Call keys.

INTERCONNECT DIAGRAM

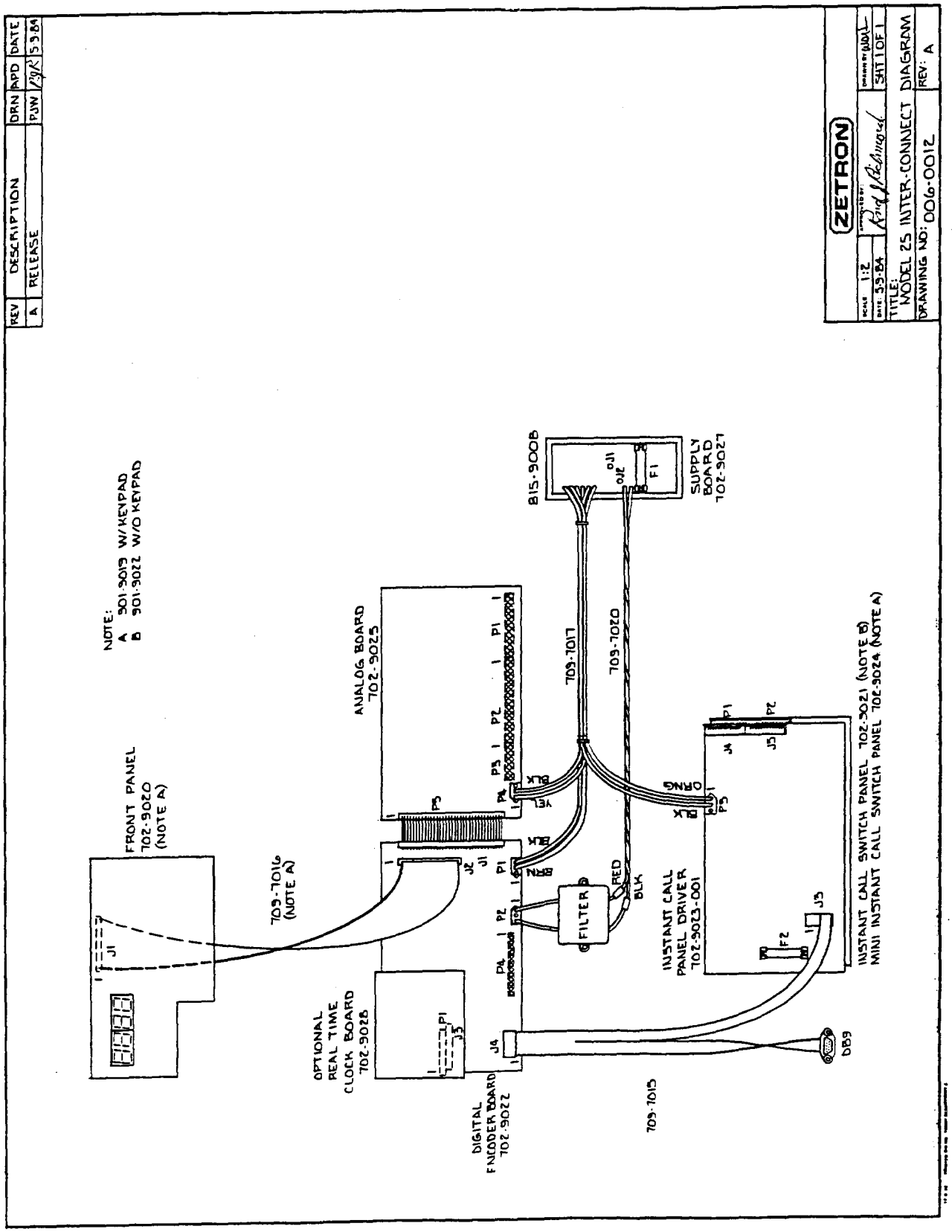

ENCODER WITH KEYPAD PARTS LIST (901-9019N)

ITEM	QTY	ZETRON P/N	DESCRIPTION	REFERENCE
1.	1	025-9018	MODEL 25 MANUAL	(BAG 10x16)
2.	1	025-9025	MODEL 25 OPERATING MANUAL	(BAG 10x16)
3.	1	025-9057	M25 PROGRAMMING GUIDE	(BAG 10x16)
4.	8	210-0001	#4 LOCK NUTS	
4.5	4	210-0007	10-24 SPEED NUT	(BAG 5x7)
5.	12	220-0102	#440x3/8 SCREW	
6.	2	220-0103	#440x1/2 SCREW	STRAIN RELIEF
7.	2	220-0105	#440x1/4 FLAT-HEAD	
8.	27	220-0108	#440x1/4 SCREW	
8.5	4	220-0116	1024x3/4 FH PHIL, BLK OX	(BAG 5x7)
9.	8	220-0208	#440x1/4 BLK SCREW	TOP & BTM TRIM RET.
10.	2	220-0209	#440x1/2 BLK SCREW	COMPUTER PORT
11.	4	220-0250	#1032x3/4 FL HD PH BLK	(BAG 5x7)
12.	4	236-0004	WASHER, NYLON #10 BLK	(BAG 5x7)
13.	2	250-0020	#440x3/8 F-F SPACER	STRAIN RELIEF
14.	4	250-0104	#440x1/2 M-F SPACER	
15.	1	322-0256	32x8 PROM	702-9022(U12)
16.				
17.	1	322-2764	8Kx8 CMOS EPROM 250NS	702-9022(U6)
17.5	1	322-7128	16x8 CMOS EPROM 250NS	702-9023-1(U2)
18.	1	322-7256	27256 EPROM	702-9022-1(U8)
19.	1	372-0001	KEYTOP, RED	(BAG 5x7)
20.	1	401-0007	6 POS BLOCK F	(BAG 5x7)
21.	3	401-0016	12 POS BLOCK F	(BAG 5x7)
22.	1	401-0038	DP9 P	(BAG 5x7)
23.	1	401-0039	9 PIN HOOD	(BAG 5x7)
24.	1	415-9002	LENS, RED DISPLAY	
25.	1	415-9053-3	MODEL 25 FRONT PANEL	
26.	2	415-9054	MODEL 25 SIDE	
27.	2	415-9056	MODEL 25 TOP/BTM CVR	
28.	1	415-9057-1	MODEL 25 BACK PANEL	
29.	1	415-9058-2	MODEL 25 TOP TRIM	
30.	1	415-9059	MODEL 25 BOTTOM TRIM	
31.	1	415-9060	MODEL 25 PLASTIC SHIM	
32.	1	415-9061	MODEL 25 PLASTIC WINDOWS	
33.				
34.	1	415-9087	STRAIN RELIEF BAR, SHORT	
35.	1	415-9088	COVER, COMPUTER PORT	(BAG 5x7)
36.	1	415-9094	DECAL SN/PN/FCC	
37.				
38.	1	416-1576	FUSE AGC 1A	(BAG 5x7)
39.	1	416-6025	FUSE 2.5A	(BAG 5x7)
39.5	1	449-0014	BAG, PLASTIC 10x16	MANUALS, GUIDE
40.	1	449-9016	SHIPPING BOX	
40.3	1	449-9019	BAG, PLASTIC 5x7	NOTE 6, MISC ITEMS
40.7	1	449-9051	BAG, PLASTIC 20x18x26	UNIT
41.	AR	561-0003	CONTACT CEMENT	

ENCODER WITH KEYPAD PARTS LIST (901-9019N) (cont'd)

ITEM	QTY	ZETRON P/N	DESCRIPTION	REFERENCE
42.	AR	562-0002	LOCTITE 495	
43.	1	601-0019	STANDARD SOFTWARE	702-9023-1 (U2)
44.	1	601-0025	STANDARD SOFTWARE	702-9022 (U6)
44.5	1	601-0226	STD SOFTWARE	702-9022 (U8)
45.	1	601-0028	DECODE PROM	702-9022 (U12)
46.	1	602-nnnn	CUSTOM SOFTWARE	
47.	1	702-9020	COMBO FRONT PANEL, PWA	
48.	1	702-9022	DIGITAL ENCODER BD, PWA	
49.	1	702-9023-1	I.C. PANEL DRIVER, PWA	
50.	1	702-9024	MINI I.C. SWITCH PANEL, PWA	
51.	1	702-9025	ANALOG ENCODER BD, PWA	
52.	1	709-7015	MODEL 25 MINI I.C. CABLE	
53.	1	709-7016	MODEL 25 FRONT PANEL CABLE	
54.	1	815-9008	ENCODER SUPPLY ASSY	

NOTES:
Notes are for production use only.

AUX INSTANT CALL PANEL PARTS LIST (901-9020G)

ITEM	QTY	ZETRON P/N	DESCRIPTION	REFERENCE
1.	2	210-0002	#632 KEPT NUT	
1.5	4	210-0007	10-24 SPEED NUT	(BAG 2x3)
2.	2	220-0103	#440x1/2 SCREW	
3.	12	220-0108	#440x1/4 SCREW	
3.5	4	220-0116	1024x3/4 FH PHIL	(BAG 2x3)
4.	2	220-0207	#632x3/8 SCREW	
5.	15	220-0208	#440x1/4 BLK SCREW	
6.	4	220-0250	#1032x1/2 FH, BLK OX	(BAG 2x3)
7.	4	236-0004	#10 NYLON FIN, BLK	(BAG 2x3)
8.	2	250-0020	#440x3/8 F-F SPACER	
9.	2	250-0102	#440x1 M-F SPACER	
10.	10	250-0104	#440x1/2 M-F SPACER	
11.	2	251-1240	#4x1/16 FIBRE SPACER	
12.				
13.	1	372-0001	KEYTOP RED	
14.	4	401-0001	CONN SPADE FEMALE	
15.	1	401-0016	CONN 12 PIN FEMALE	
16.	2"	408-1600	16GA BLACK WIRE	
17.	2"	408-1602	16GA RED WIRE	
18.	2	415-9060	MODEL 25 PLASTIC SHIM	
19.	2	415-9061	M25 PLASTIC WINDOWS	
20.	1	415-9062-1	I.C. FRONT PANEL	
21.	1	415-9063-1	I.C. BACK COVER	
22.	1	415-9064-2	I.C. TOP TRIM	
23.	1	415-9113	I.C. BOTTOM TRIM	
24.	1	415-9087	STRAIN RELIEF BAR, SHORT	
25.	1	415-9094	DECAL SN/PN/FCC	
26.	1	416-1576	FUSE AGC 1A	(BAG 2x3)
27.	1	416-5001	1 AMP FILTER	
28	1	449-9016	SHIPPING BOX	
28.3	1	449-9042	BAG, PLASTIC 2x3	
28.5	1	449-9052	BAG, PLASTIC 20x18x26	UNIT
29.	.001	561-0002	LOCTITE, #495	
30.	1	601-0018	STANDARD SOFTWARE	(702-9023-2, U2) NOTE 2
31.	1	702-9021	I.C. SWITCH PANEL, PWA	
32.	1	702-9023-2	I.C. PANEL DRIVER, PWA	

NOTES:
Notes are for production use only.

ENCODER W/O KEYPAD ASSY PARTS LIST (901-9022L)

ITEM	QTY	ZETRON P/N	DESCRIPTION	MFR. PART#	MANUFACTURER
1.					
2.	1	025-9018	MODEL 25 MANUAL	(BAG 10x16)	
3.	1	025-9025	MODEL 25 OPERATORS MANUAL	(BAG 10x16)	
4.	1	025-9057	MODEL 25 PROGRAMMING GUIDE	(BAG 10x16)	
4.5	1	025-9125	MODEL 25 CONF PROG. MANUAL		
5.	6	210-0001	#4 LOCK NUT		
5.5	4	210-0007	10-24 SPEED NUT	(BAG 5x7)	
6.	8	220-0102	#440x3/8 SCREW		
7.	2	220-0103	#440x1/2 SCREW		
8.	2	220-0105	#440x1/4 FLAT HEAD		
9.	26	220-0108	#440x1/4 SCREW		
9.5	4	220-0116	1024x3/4 FH PHIL, BLK OX	(BAG 5x7)	
10.	15	220-0208	#440x1/4 BLK SCREW		
11.	4	220-0250	#1032x3/4 BLK SCREW	(BAG 5x7)	
12.	4	236-0004	#10 BLK NYLON WASHER	(BAG 5x7)	
13.	2	250-0020	#440x3/8 SPACER/STRAIN BARS		
14.	4	250-0104	#440x1/2 M-F SPACER		
15.	1	322-0256	32x8 PROM 702-9022-1(U12)		
16.	1	322-2764	8Kx8 CMOS EPROM 250NS	702-9022(U6)	
17.	1	322-7128	16Kx8 CMOS EPROM 250NS	702-9023-1(U2)	
18.	1	322-7256	27256 EPROM 702-9022-1 (U8)		
19.	1	372-0001	KEYTOP, RED	(BAG 5x7)	
20.	1	401-0007	CONN 6 PIN BLOCK FEMALE		
21.	3	401-0016	CONN 12 PIN BLOCK FEM		
22.	1	401-0038	9 PIN DP	(BAG 5x7)	
23.	1	401-0039	9 PIN HOOD	(BAG 5x7)	
24.	2	415-9054	MODEL 25 SIDE		
25.	2	415-9056	MODEL 25 TOP/BOTTOM COVER		
26.	1	415-9057-1	MODEL 25 BACK PANEL		
27.	2	415-9060	MODEL 25 PLASTIC SHIM		
28.	2	415-9061	MODEL 25 PLASTIC WINDOWS		
29.	1	415-9062-1	I.C. FRONT PANEL		
30.	1	415-9064-2	I.C. TOP TRIM		
31.	1	415-9113	I.C. BOTTOM TRIM		
32.					
33.	1	415-9087	STRAIN RELIEF BAR, SHORT		
34.	1	415-9094	DECAL SN/PN/FCC		
35.					
36.	1	416-1576	FUSE AGC 1 A	(BAG 5x7)	
37.	1	416-6025	FUSE AGC 2.5ASB	(BAG 5x7)	
37.2	1	449-9008	5 /14 DSDD DISC		
37.5	1	449-0014	BAG, PLASTIC, 10x16	MANUALS, GUIDE	
38.	1	449-9016	SHIPPING BOX		
38.3	1	449-9019	BAG, PLASTIC, 5x7	NOTE 5, MISC ITEMS	
38.5	1	449-9041	BAG, PLASTIC, 7x10	CABLE	
38.7	1	449-9051	BAG, PLASTIC, 20x18x26	UNIT	
39.	A/R	562-0002	ADHESIVE SUPER GLUE		

ENCODER W/O KEYPAD ASSY PARTS LIST (901-9022L) Continued

ITEM	QTY	ZETRON P/N	DESCRIPTION	MFR. PART#	MANUFACTURER
40.	1	601-0025	STANDARD SOFTWARE	(U6 OF 702-9022)	
40.5	1	601-0026	STD SOFTWARE	(U8 OF 702-9022)	
41.	1	601-0028	DECODE PROM	(U12 OF 702-9022)	
42.	1	601-0046	STANDARD SOFTWARE	(U2 OF 702-9023-1)	
43.	1	602-nnnn	CUSTOM SOFTWARE		
43.5	1	675-0002	MODEL 25 CONF. PROGRAM		
44.	1	702-9021	I.C. SWITCH PANEL, PWA		
45.	1	702-9022	DIGITAL ENCODER BOARD, PWA		
46.	1	702-9023-1	I.C. PANEL DRIVER, PWA		
47.	1	702-9025	ANALOG ENCODER BD, PWA		
48.	1	709-7015	MODEL 25 MINI I.C. CABLE		
48.5	1	709-9030	MODEL 25 COMPUTER CABLE		
49.	1	815-9007	ENCODER (W/O KEYPAD) SUPPLY		

NOTES:
Notes are for production use only.

ENCODER SUPPLY SUB-ASSY PARTS LIST (815-9008C)

ITEM	QTY	ZETRON P/N	DESCRIPTION	MFR. PART#	MANUFACTURER
1.	4	210-0002	#632 NUTS		
2.	2	220-0205	#632x3/4 SCREW		
3.	2	236-0002	SHOULDER WASHER	7721-5PPS	THERMALOY
4.	1	236-0003	INSULATOR, T03	43-03-2	THERMALOY
5.	1	251-1260	#6 X .062" FBR WSHR		
6.	1	316-0323	REGULATOR +5V 5A		
7.	1	415-9068	MODEL 25 HEATSINK PLT		
8.	AR	561-0001	THERMAL COMPOUND		
9.	1	702-9027	ENCODER SUPPLY BOARD		
10.	1	709-7017	M25 POWER DISTR HARNESS		
11.	1	709-7020	M25 POWER INPUT CABLE		

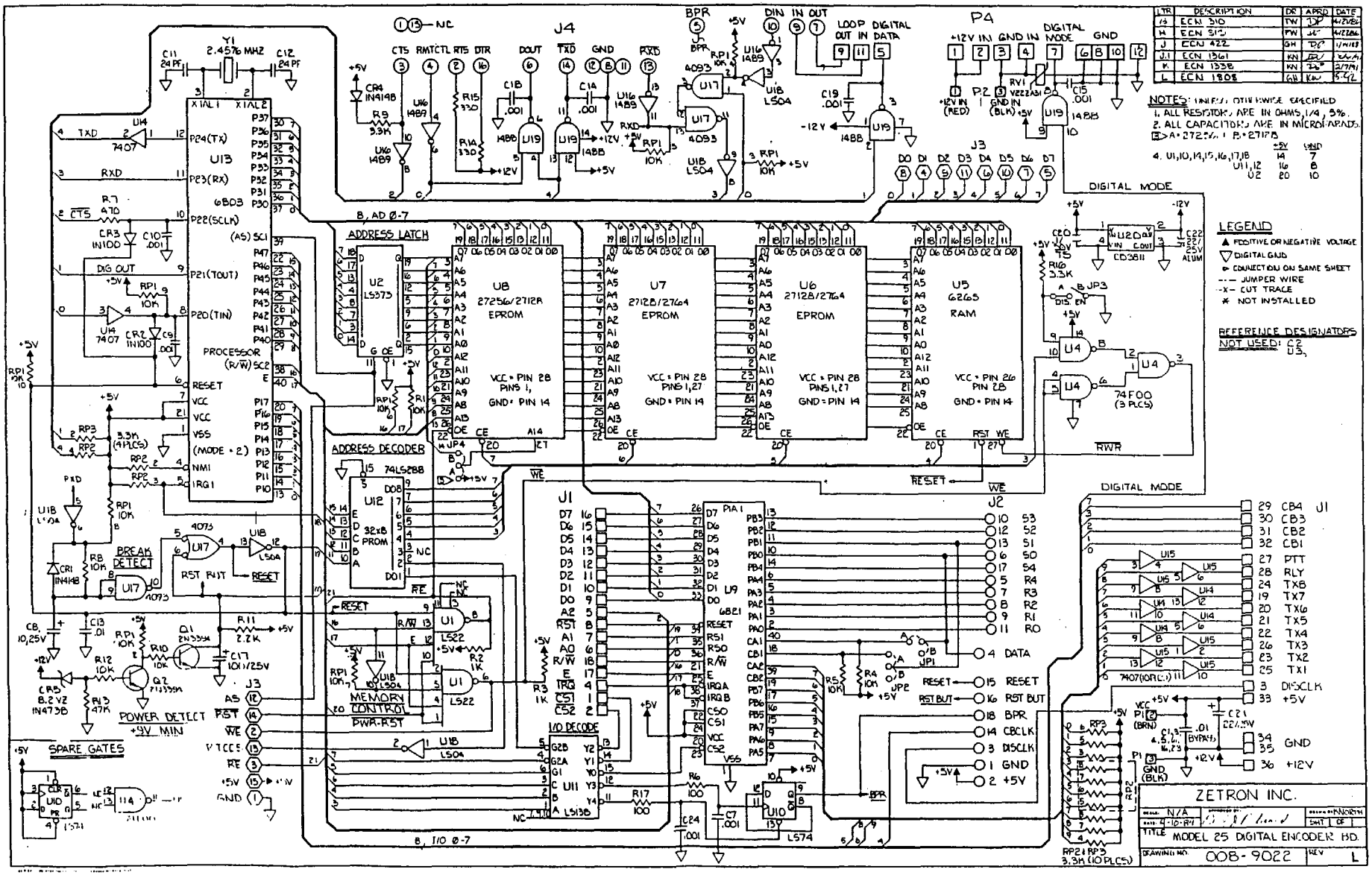

LTR DESCRIPTION DR APRD DATE
H ECN 310
J ECN 422
J.1 ECN 1361
K ECN 1338
L ECN 1808
NOTES: UNLESS OTHERWISE SPECIFIED
1. ALL RESISTORS ARE IN OHMS, 1/4, 5%.
2. ALL CAPACITORS ARE IN MICROFARADS.
3. A = 27256 & B = 27128
4. U1,10,14,15,16,17,18 +5V 14 GND 7
U11,12 16 8
U2 20 10
LEGEND
▲ POSITIVE OR NEGATIVE VOLTAGE
▽ DIGITAL GND
CONNECTION ON SAME SHEET
JUMPER WIRE
CUT TRACE
* NOT INSTALLED
REFERENCE DESIGNATORS NOT USED: C2 U3
ZETRON INC.
TITLE MODEL 25 DIGITAL ENCODER BD.
DRAWING NO. 008-9022
REV L
PROCESSOR
ADDRESS LATCH
ADDRESS DECODER
MEMORY CONTROL PWR-RST
BREAK DETECT
POWER DETECT +9V MIN
SPARE GATES
DIGITAL MODE

DIGITAL BOARD PARTS I.D. (702-9022L)

Note location of U6, U7, U8, JP1, JP2 and J3.

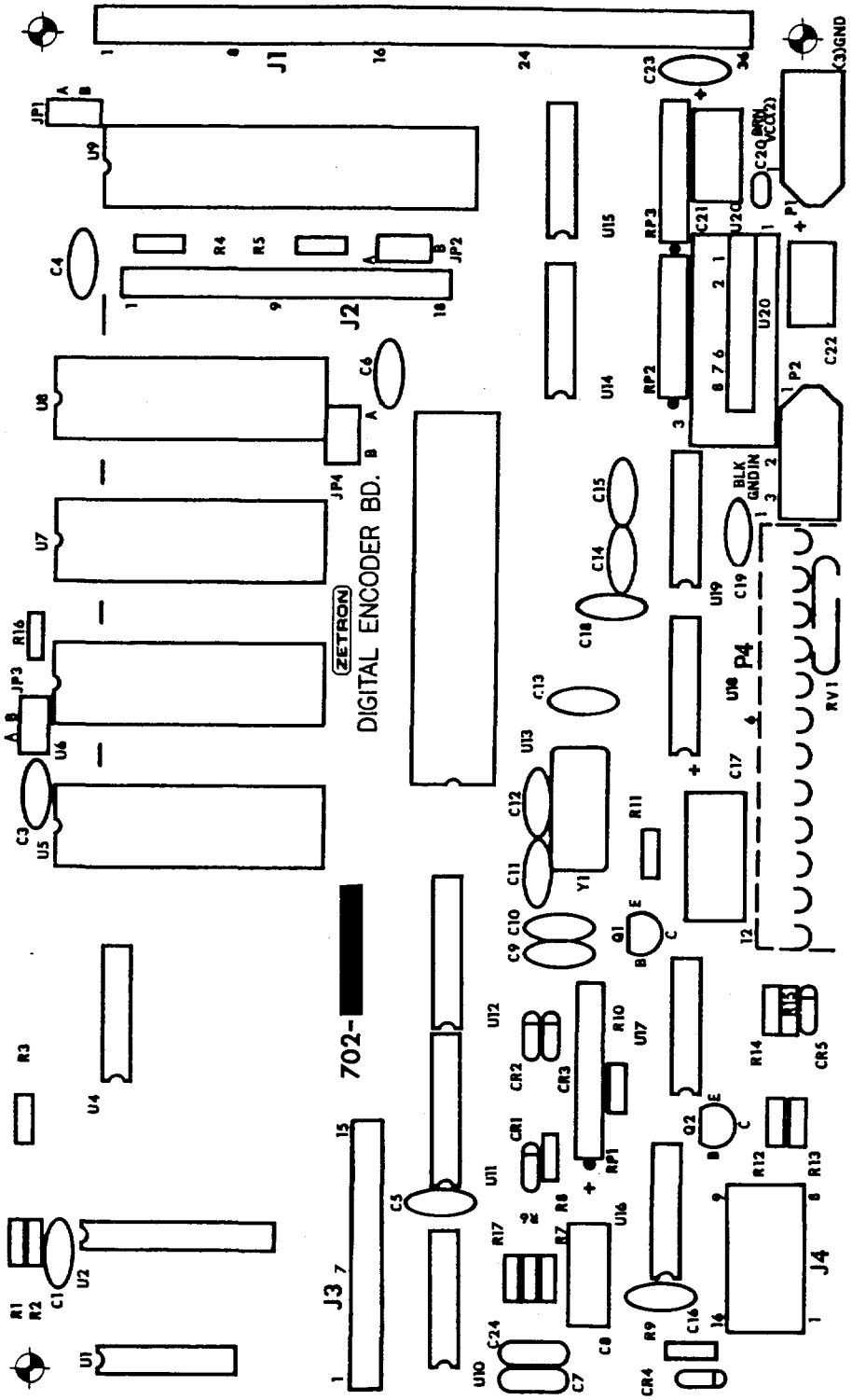

DIGITAL BOARD PARTS LIST (702-9022L)

ITEM	QTY	ZETRON P/N	DESCRIPTION	COMPONENT REF.	MFR. PART #	MANUFACTURER
1.	2	101-0049	100 OHM .25W 5%	R6 R17		
2.	2	101-0061	330 OHM	R14 15		
3.	1	101-0065	470 OHM	R7		
4.	2	101-0073	1K	R2 3		
5.	1	101-0081	2.2K	R11		
6.	2	101-0085	3.3K	R9 16		
7.	6	101-0097	10K	R1 4 5 8 10 12		
8.	1	101-0113	47K	R13		
9.	1	105-0002	VARISTOR	RV1		V22ZA31
10.	2	119-0003	3.3K x 7 R-PAK	RP2 3		
11.	1	119-0006	10K x 9 R-PAK	RP1		
12.	2	150-0024	24 PF 1KV DISC	C11 12		
13.	8	150-0096	.001 UF 1KV DIS	C7 9 10 14 15 C18 19 C24		
14.	8	150-0110	.01 UF 50V DISC	C1 3-6 13 16 23		
15.	1	151-0180	.1 UF 50V TS	C20		
16.	1	155-0050	10 UF 25V ALUM	C8		
17.	2	155-0055	22 UF 25V ALUM	C21 22		
18.	1	155-0080	100 UF 25V ALUM	C17		
18.5	1	236-0005	CRYSTAL INSULAT	XY1		
19.	1	314-4138	1-8 DECODER	U11	74LS138	
20.	1	314-4373	OCTAL TS LATCH	U2	74LS373	
21.	1	314-7404	HEX INVERTER	U18	74LS04	
22.	1	314-7422	DUAL 4-IN NAND	U1	74LS22	
23.	1	314-7474	DUAL D-FF W/S,C	U10	74LS74	
24.	2	315-7407	HEX N-INV BUFFR	U14 15	7407	
25.	1	317-1488	QUAD RS232 TX	U19	1488	
26.	1	317-1489	QUAD RS232 RX	U16	1489	
27.	1	321-6265	8Kx8 RAM	U5	HM6265	
28.	1	321-6803	MICROPROCESSOR	U13	6803	
29.	1	321-6820	PER INTFC ADAPT	U9	6821 PIA	
30.	1	323-4093	QUAD NAND SCHMI	U17	4093	
31.	1	326-7400	QUAD NAND	U4	74F00	
32.	2	340-3394	NPN GEN XISTOR	Q1 2	2N3394	
33.	2	342-3008	GERMANIUM DIODE	CR2 3	1N100	
34.	2	342-3009	SILICON DIODE	CR1 4	1N4148	
35.	1	343-3100	1W 8.2V ZENER	CR5	1N4738A	
36.	1	371-0012	SPDT SLIDE SW	JP3-B	*NOTE 2	
37.	1	376-0245	2.4576 MHz XTAL	Y1		
38.	2	401-0027	18 POS. CONN.	J1		
39.	2	401-0029	SKT WAFER 3 PIN	P1 2		
40.	1	401-0015	12-PIN RECEPT	P4	*NOTE 1	
41.	9	401-0052	STAKE PIN	JP1 2 4(3 EA)		
42.	18	401-1364	STAKE PIN	J2(18 EA)		BERG
43.	3	402-3040	MINI JUMPER	JP1 2 4 POS B		
44.	9	407-0014	SKT, 14 PIN DIP	XU1 4 10 14-19		
45.	3	407-0016	SKT, 16 PIN DIP	XU11 XU12 J4		
46.	1	407-0020	SKT, 20 PIN DIP	XU2		

ENCODER DIGITAL BOARD PARTS LIST (702-9022L) cont'd

ITEM	QTY	ZETRON P/N	DESCRIPTION	COMPONENT REF.	MFR. PART #	MANUFACTURER
47.	4	407-0028	SKT, 28 PIN DIP	XU5-8		
48.	2	407-0040	SKT, 40 PIN DIP	XU9 13		
49.	1	407-0115	SKT, 15 PIN SIP	J3		
50.	1	410-9022D	P.C.B.	--		
51.	1	416-1213	28 PIN SKT W/BATT	U5		
52.	1	802-0059	+5/-12VDC CONV	U20	CB38113	

NOTES:
1. INSTALL CONNECTOR SO THE SCALLOP SIDE IS ALONG EDGE OF PCB.
2. INSTALL SWITCH (ITEM 36) ON SOLDER SIDE.

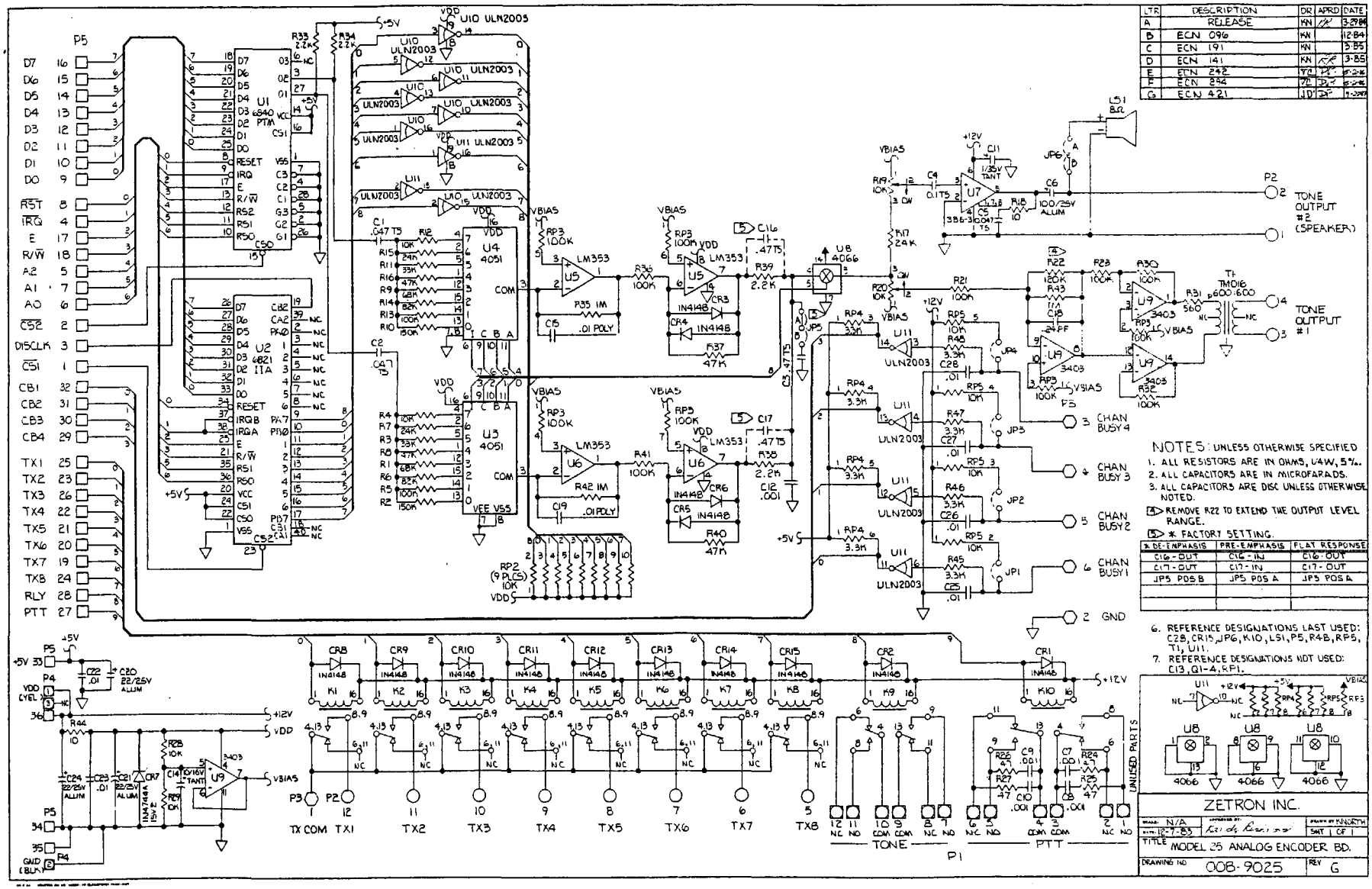

LTR	DESCRIPTION	DR	APRD	DATE
A	RELEASE	KN	[illegible]	3-29-84
B	ECN 096	KN		12-84
C	ECN 191	KN		3-85
D	ECN 141	KN	[illegible]	3-85
E	ECN 242	[illegible]	[illegible]	[illegible]
F	ECN 294	[illegible]	[illegible]	[illegible]
G	ECN 421	JD	[illegible]	[illegible]

NOTES: UNLESS OTHERWISE SPECIFIED

1. ALL RESISTORS ARE IN OHMS, 1/4W, 5%.
2. ALL CAPACITORS ARE IN MICROFARADS.
3. ALL CAPACITORS ARE DISC UNLESS OTHERWISE NOTED.
4. REMOVE R22 TO EXTEND THE OUTPUT LEVEL RANGE.
5. * FACTORY SETTING.

* DE-EMPHASIS	PRE-EMPHASIS	FLAT RESPONSE
C16 - OUT	C16 - IN	C16 - OUT
C17 - OUT	C17 - IN	C17 - OUT
JP5 POS B	JP5 POS A	JP5 POS A

6. REFERENCE DESIGNATIONS LAST USED: C28, CR15, JP6, K10, LS1, P5, R48, RP5, T1, U11.
7. REFERENCE DESIGNATIONS NOT USED: C13, Q1-4, RP1.

ZETRON INC.

SCALE: N/A | APPROVED BY: [illegible] | DRAWN BY: KNORTH
DATE: 12-7-83 | SHT 1 OF 1
TITLE: MODEL 25 ANALOG ENCODER BD.
DRAWING NO: 008-9025 | REV: G

ANALOG BOARD PARTS I.D. (702-9025G)

Note location of JP1-JP6, R22, C16 and C17.

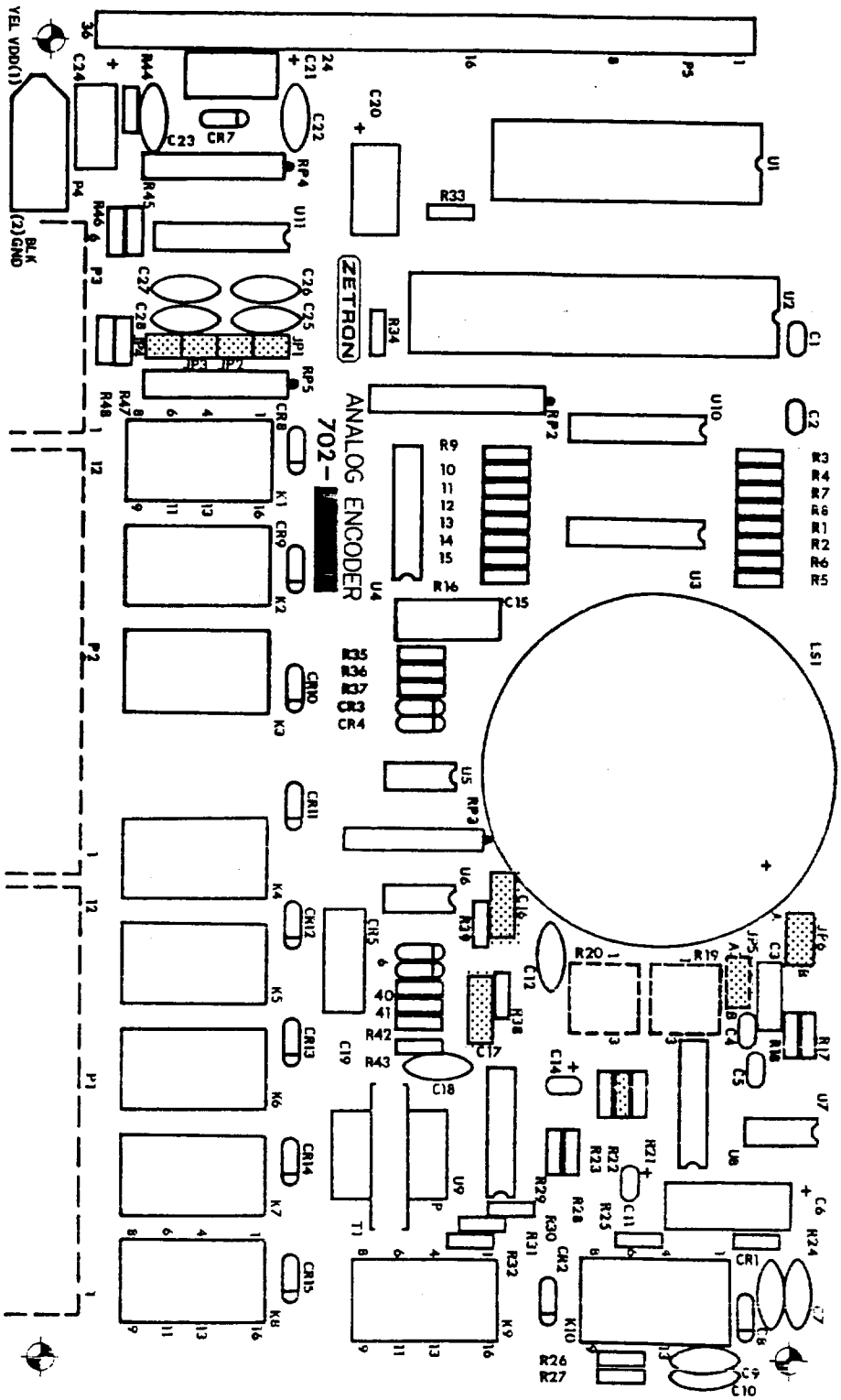

ENCODER ANALOG BOARD PARTS LIST (702-9025G)

ITEM	QTY	ZETRON P/N	DESCRIPTION	COMPONENT REF.	MFR. PART #
1.	2	101-0025	10 OHM .25W 5%	R18 44	
2.	4	101-0047	47 OHM	R24-27	
3.	1	101-0067	560	R31	
4.	4	101-0081	2.2K	R33 34 38 39	
5.	4	101-0085	3.3K	R45-48	
6.	4	101-0097	10K	R4 12 28 29	
7.	3	101-0106	24K	R7 15 17	
8.	2	101-0109	33K	R3 11	
9.	4	101-0113	47K	R8 16 37 40	
10.	2	101-0117	68K	R1 9	
11.	2	101-0119	82K	R6 14	
12.	8	101-0121	100K	R5 13 21 23 30 32 36 41	
13.	1	101-0123	120K	R22	
14.	2	101-0125	150K	R2 10	
15.	3	101-0145	1M	R35 42 43	
16.	1	107-3085	10K POT 1 TURN	R19	
17.	1	108-0103	10K POT 4 TURN	R20	
18.	1	119-0003	3.3Kx7 R-PAK	RP4	
19.	1	119-0006	10Kx9 R-PAK	RP2	
20.	1	119-0007	100Kx7 R-PAK	RP3	
21.	1	119-0008	10Kx7 R-PAK	RP5	
22.	1	150-0024	24PF DISC	C18	
23.	5	150-0096	.001UF/1KV DISC	C7-10 12	
24.	6	150-0110	.01UF/50V DISC	C22 23 25-28	
25.	3	151-0130	.047UF/50V TS	C1 2 5	
26.	1	151-0180	.1UF/50V TS	C4	
27.	1	151-0199	.47UF/50V TS	C3	
28.	2	152-0100	.01UF/25V POLY	C15 19	
29.	1	154-0025	1UF/35V TANT	C11	
30.	1	154-0100	10UF/16V TANT	C14	
31.	3	155-0055	22UF/25V ALUM	C20 21 24	
32.	1	155-0080	100UF/25V ALUM	C6	
33.	1	305-0003	AUDIO XFORMER	T1	TM-016
34.	1	305-0017	SPEAKER 8 OHM	LS1	
35.	2	316-0353	DUAL OP-AMP	U5 6	LF353
36.	1	316-0386	AUDIO PWR AMP	U7	LM386N-388
37.	1	316-3403	QUAD OP-AMP	U9	MC3403P14
38.	1	321-6820	PIA	U2	MC6821
39.	1	321-6840	PROG TIMER MOD	U1	6840 PTM
40.	2	323-4051	1-8 ANALOG MUX	U3 4	4051
41.	1	323-4066	QUAD ANALOG SW	U8	4066
42.	2	340-2003	RELAY DRIVER	U10 11	ULN2003
43.	12	342-3009	SILICON DIODE	CR1-6 8-15	1N4148
44.	1	343-3108	1W 15V ZENER	CR7	1N4744A
45.	10	380-0030	DPDT 12V RELAY	K1-10	
46.	1	401-0008	6-POS RECEPT	P3	
47.	2	401-0015	12-POS RECEPT	P1 2	
48.	1	401-0029	SKT WAFER 3 PIN	P4	
49.	1	401-0030	36-PIN RT. AN.	P5	
50.	14	401-0052	STAKE PINS	XJP1-4 (2EA) XJP5 6 (3 EA)	

ENCODER ANALOG BOARD PARTS LIST (702-9025G) cont'd

ITEM	QTY	ZETRON P/N	DESCRIPTION	COMPONENT REF.	MFR. PART #
51.	6	402-3040	MINI JUMPER	JP1-4 JP5 POS B JP6 POS A	
52.	3	407-0008	SKT, 8 PIN DIP	XU5-7	
53.	2	407-0014	SKT, 14 PIN DIP	XU8 9	
54.	4	407-0016	SKT, 16 PIN DIP	XU3 4 10 11	
55.	1	407-0028	SKT, 28 PIN DIP	XU1	
56.	1	407-0040	SKT, 40 PIN DIP	XU2	
57.	1"	408-0001	24 GA BARE WIRE	XLS1	
58.	1	410-9025D	P.C.B.		

DO NOT INSTALL:

C16 17

FRONT PANEL BOARD SCHEMATIC (008-9020A)

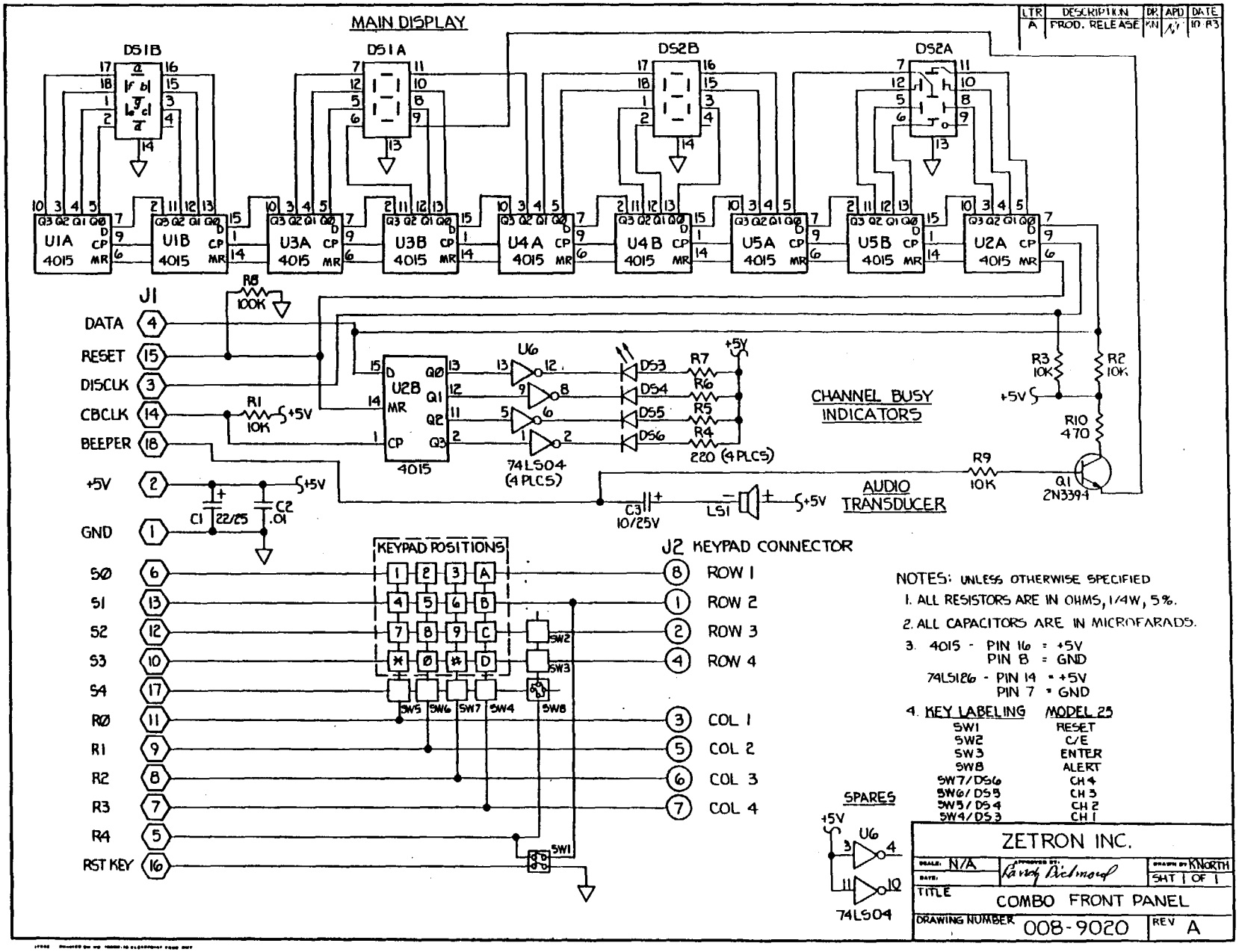

FRONT PANEL BOARD PARTS I.D. (702-9020A)

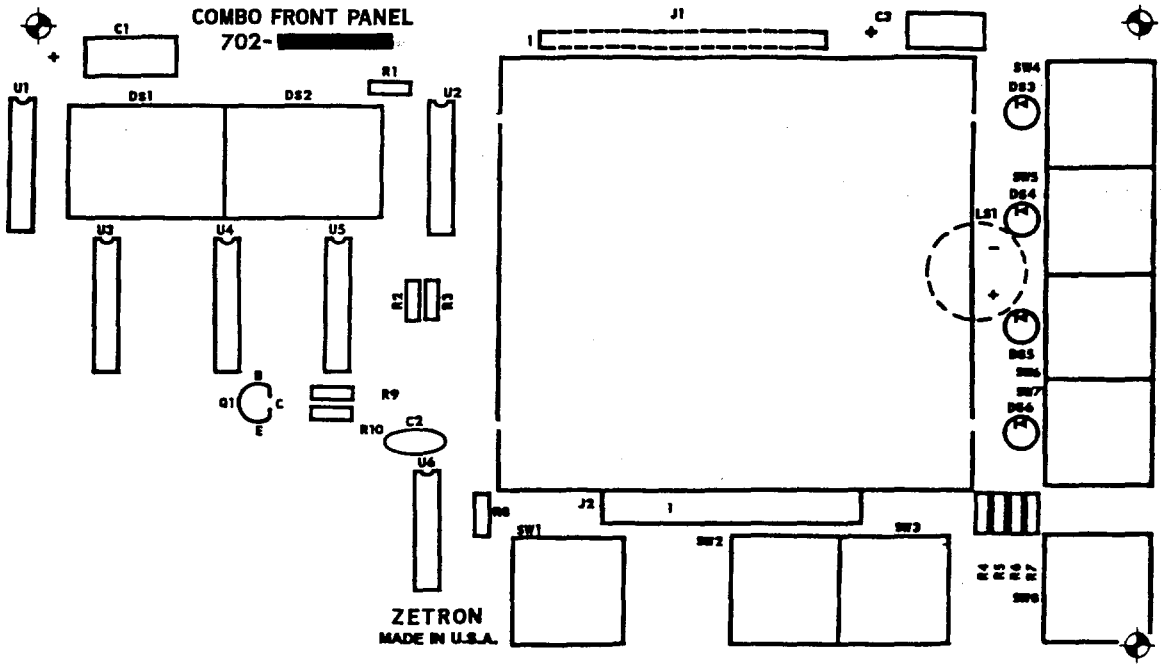

COMBO FRONT PANEL PARTS LIST (702-9020A)

ITEM	QTY	ZETRON P/N	DESCRIPTION	COMPONENT REF.	MFR. PART #	MANUFACTURER
1.	4	101-0057	220 OHM	R4-7		
2.	1	101-0065	470 OHM	R10		
3.	4	101-0097	10K	R1-3 9		
4.	1	101-0121	100K	R8		
5.	1	150-0110	.01 UF 50V DISC	C2		
6.	1	155-0055	22 UF 25V AXIAL	C1		
7.	4	251-3125	#4 X 5/16" L	(DS3-6)		
8.	4	251-1240	#4 X 1/16" L	(J2)		
9.	4	311-0010	RED LAMP LEDS	DS3-6		
10.	2	311-0030	DUAL 7-SEG LEDS	DS1 2		PANASONIC/H.P.
11.	1	314-7404	HEX INVERTER	U6	74LS04	
12.	5	323-4015	DUAL 4B SFT REG	U1-5	4015	
13.	1	340-3394	NPN GEN	Q1	2N3394	
14.	8	371-0002	SINGLE DPDT KEY	SW1-8		GREYHILL
15.	1	373-0116	16 KEY X-Y KYBD	(J2)	KEA5A902	ALPS (JAPAN)
16.	1	401-0108	PINS 8x.025 SQ	J2	65503-408	BERG
17.	1	401-1364-18	13 PIN STRIP	J1	BERG STICK	BERG
18.	1	410-9020	P.C.B.	--	410-9020	ZETRON
19.	AR	561-0002	SUPER GLUE	(J2 SPACERS)	#495	LOCKTITE

ENCODER SUPPLY BOARD SCHEMATIC (008-9027C)

DATE	BY	REVISION RECORD	AUTH	DR	CK
4-84	A	RELEASE	KP	KN	
10-84	B	ECN 518	KP	FW	
9-87	C	ECN 662	KJ	LW	KP

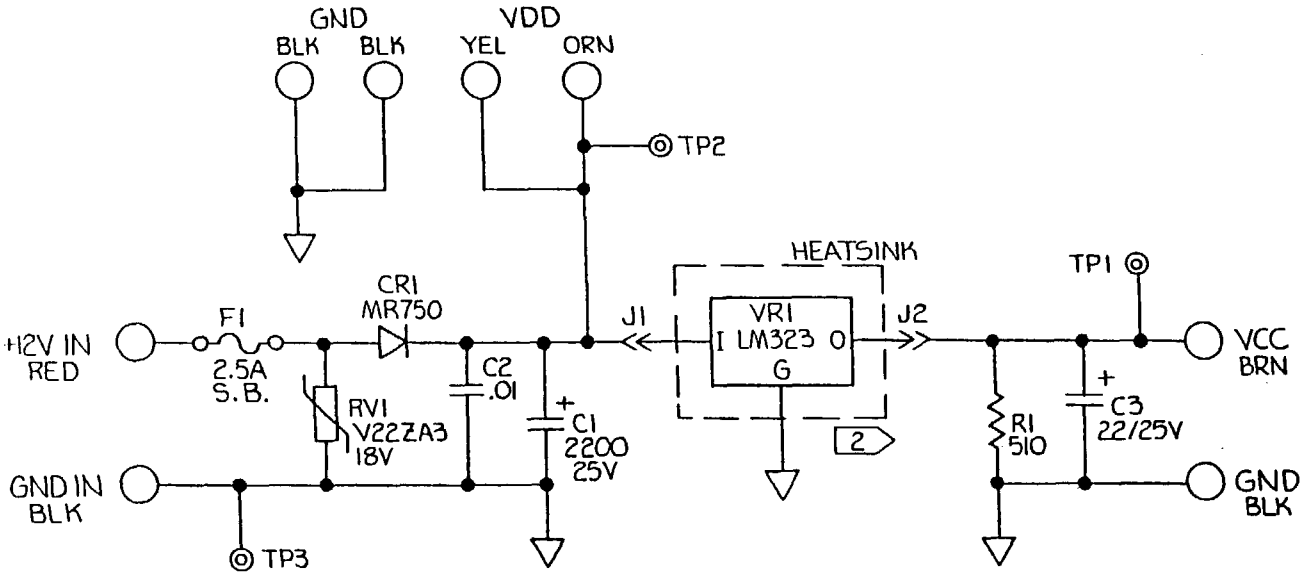

NOTES:

1. UNLESS OTHERWISE SPECIFIED
   ALL RESISTORS ARE IN OHMS, 1/4W, 5%
   ALL CAPACITORS ARE IN MICROFARADS

[2] VR1 AND HEATSINK ARE INSTALLED ON THE 815-9008 SUB-ASSEMBLY LEVEL.

TOLERANCES (UNLESS AS NOTED)	ZETRON INC.		
DECIMAL ±	SHT 1 OF 1	SCALE N/A	DRAWN BY K NORTH
FRACTIONAL ±	TITLE ENCODER SUPPLY BOARD		APPROVED BY Karl Richmond
ANGULAR ±	DATE 4-3-84	DRAWING NUMBER 008-9027	REV C

ENCODER SUPPLY BOARD PARTS I.D. (702-9027C)

Note location of fuse, F1.

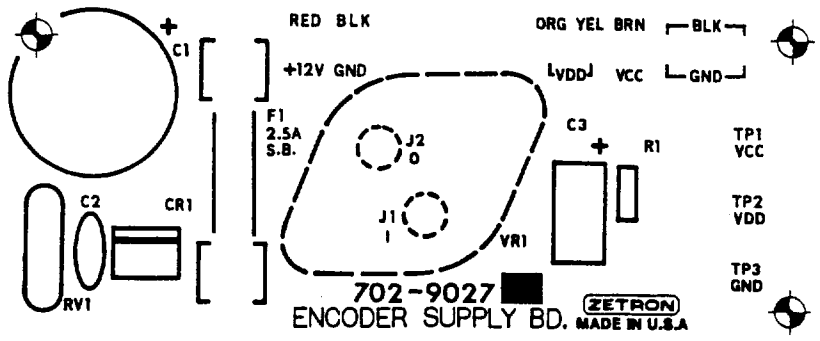

ENCODER SUPPLY PARTS LIST (702-9027C)

ITEM	QTY	ZETRON P/N	DESCRIPTION	COMPONENT REF.	MFR. PART #
1.	1	101-0066	510 OHM 1/4 W	R1	
2.	1	105-0002	VARISTOR	RV1	V22ZA3 18A
3.	1	150-0110	0.01uF/50V	C2	
4.	1	155-0055	22/25V	C3	
5.	1	155-0121	2200/25V AL EL	C1	
6.	1	342-0750	6A/50V DIODE	CR1	MR750
7.	2	401-0025	CONN JACKS	J1 2	
8.	1	410-9027C	PCB		
9.	2	416-3040	FUSE CLIPS	XF1	
10.	1	416-6025	FUSE AGC 2.5ASB	F1	

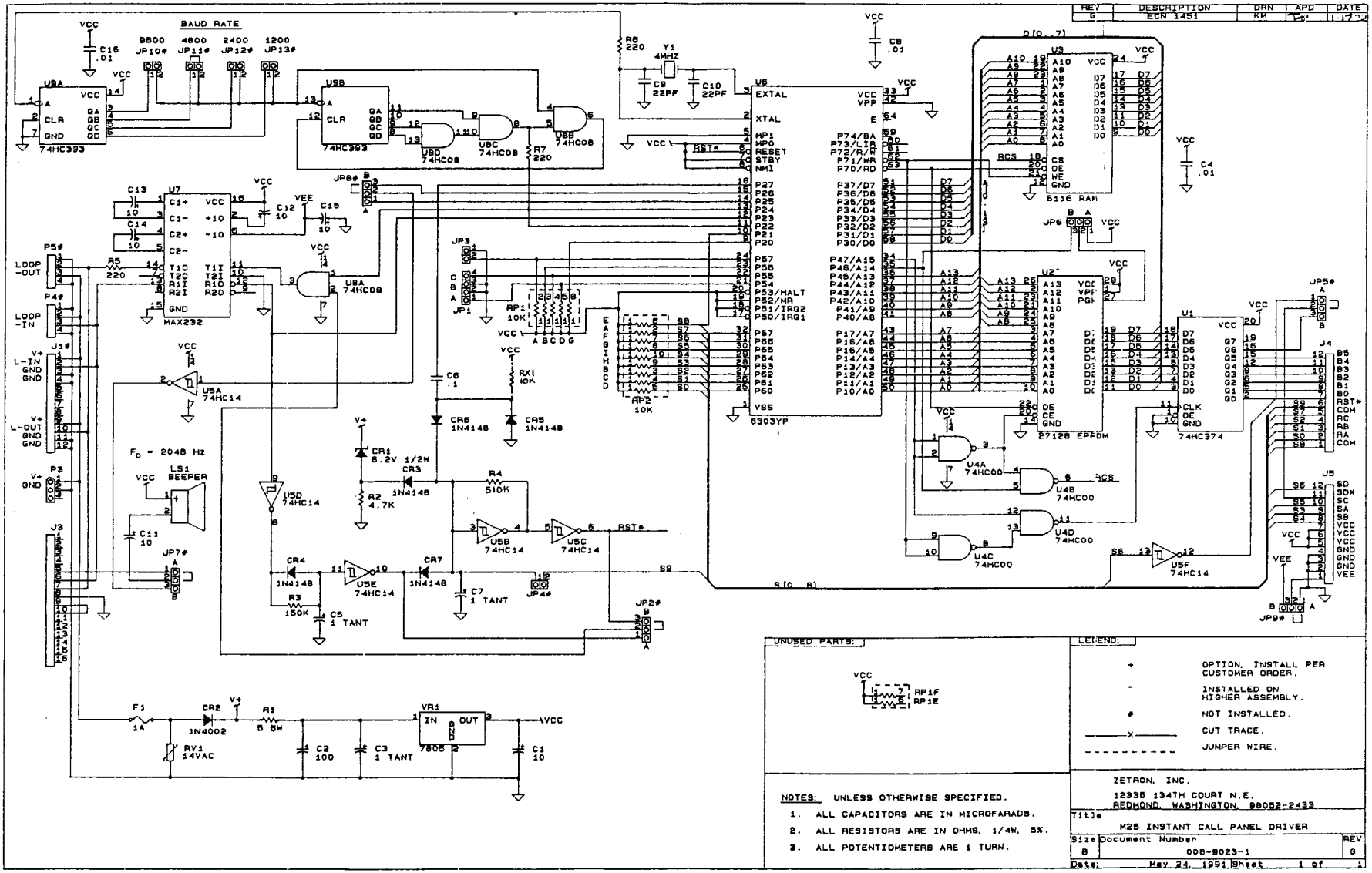
BAUD RATE
9600 JP10#
4800 JP11#
2400 JP12#
1200 JP13#
74HC393
74HC08
MAX232
74HC14
LS1 BEEPER
F_0 = 2048 Hz
6303YP
6116 RAM
27128 EPROM
74HC374
74HC00
1N4002
7805
14VAC
UNUSED PARTS:
RP1F
RP1E
LEGEND:
+ OPTION, INSTALL PER CUSTOMER ORDER.
- INSTALLED ON HIGHER ASSEMBLY.
NOT INSTALLED.
CUT TRACE.
JUMPER WIRE.
NOTES: UNLESS OTHERWISE SPECIFIED.
1. ALL CAPACITORS ARE IN MICROFARADS.
2. ALL RESISTORS ARE IN OHMS, 1/4W, 5%.
3. ALL POTENTIOMETERS ARE 1 TURN.
ZETRON, INC.
12335 134TH COURT N.E.
REDMOND, WASHINGTON, 98052-2433
Title
M25 INSTANT CALL PANEL DRIVER
Size B
Document Number 008-9023-1
REV G
Date: May 24, 1991
Sheet 1 of 1

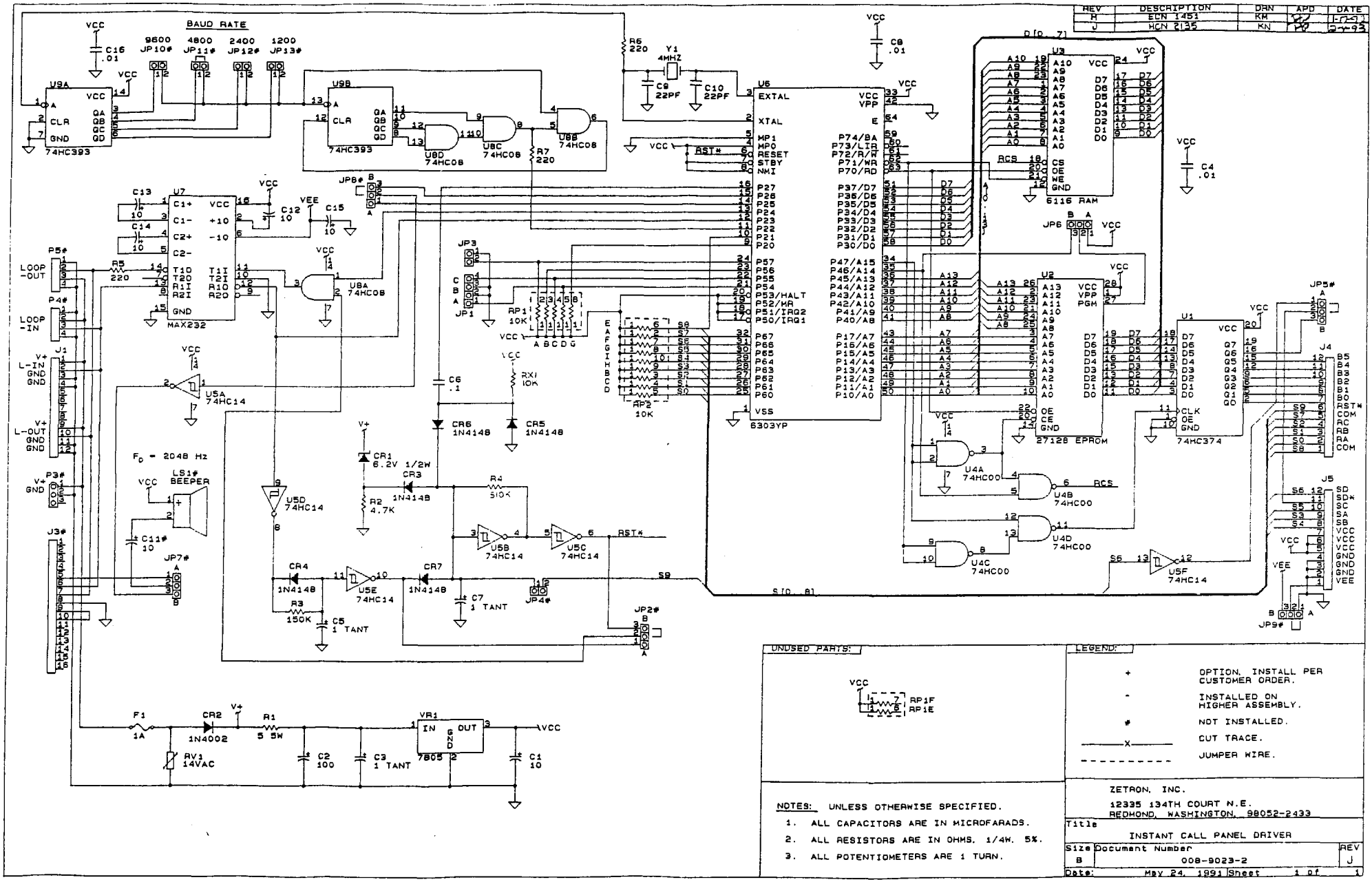

REV	DESCRIPTION	DRN	APD	DATE
H	ECN 1451	KM		1-7-91
J	HCN 2135	KN		2-4-93

INSTANT CALL DRIVER BOARD PARTS SILKSCREEN (702-9023-1G/-2J)

Note location of JP1, JP3, and fuse, F2.

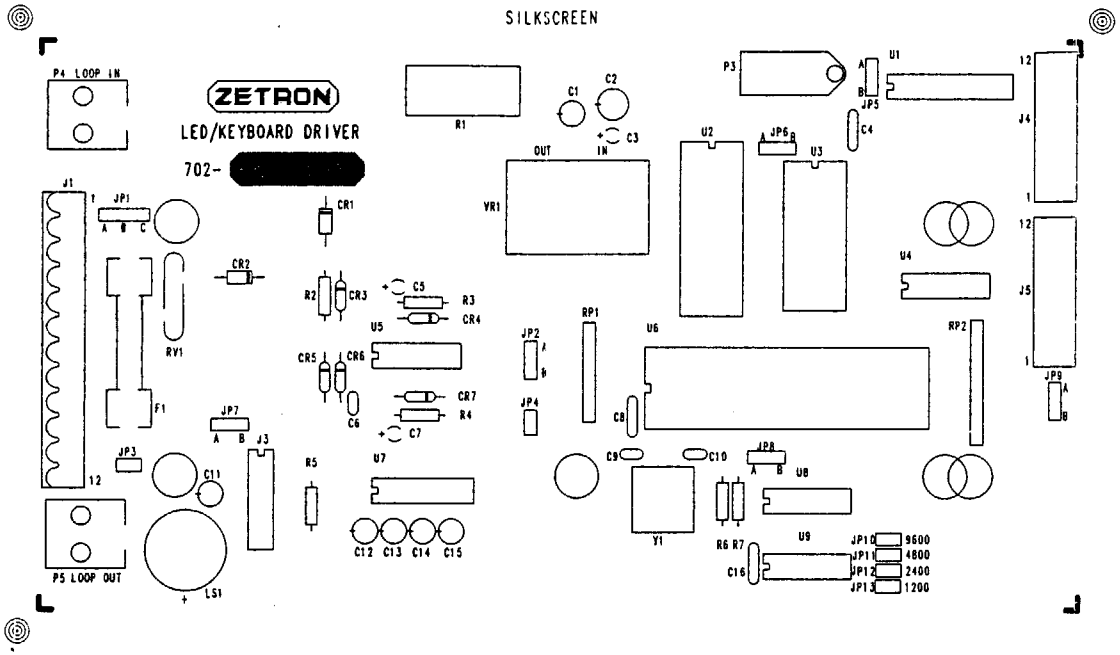

INSTANT CALL PANEL DRIVER PARTS LIST (702-9023-1G)

LEGEND:
+ = OPTION
/ = NOT INSTALLED
^ = INSTALLED ON HIGHER ASSY

Item	Quantity	Reference	Part	Description	Mfg.Part No.
1	3	R5,R6,R7	101-0057	220 OHM 1/4W 5% CARBON FILM	
2	1	R2	101-0089	4.7K 1/4W 5% CARBON FILM	
3	1	RX1 (NOTE 3)	101-0097	10K 1/4W 5% CARBON FILM	
4	1	R3	101-0125	150K 1/4W 5% CARBON FILM	
5	1	R4	101-0138	510K 1/4W 5% CARBON FILM	
6	1	R1 (NOTE 1)	103-3050	5 OHM 5W 5% CARBON FILM	PW PW5
7	1	RV1	105-0002	VARISTOR 14V AC	V22ZA3
8	1	RP2	119-0006	10K x 9 R-SIP	4610X-101-103
9	1	RP1	119-0008	10K x 7 R-SIP	EXB-F8E103G or J
10	3	C4,C8,C16	150-0110	.01 UF 50V 80%-20% CERAMIC DISC	DF-103Z
11	2	C9,C10	151-0022	22PF 50V +-10%	CN15C220K
12	1	C6	151-0180	.1 UF 50V +-10% CERAMIC, UNSTABLE	AVXSR205E104MAA
13	3	C3,C5,C7	154-0025	1 UF 35V TANTALUM	ECS-F-35E1
14	6	C1,C11,C12,C13,C14,C15	155-0052	10 UF 35V +-20% RADIAL ALUMINUM ELECTROLYTIC	ECEA1VU100
15	1	C2	155-0077	100UF 25V +-20% RADIAL ALUMINUM ELECTROLYTIC	ECEA1EU101
16	1	LS1	305-0002	AUDIO SPEAKER	AT-02
17	1	U7	316-0232	RS232 DRIVER	AD232JN
18	1	VR1	316-7805	REGULATOR, +5V 1.5A	LM340T-5
19	1	U3	321-6116	RAM 2Kx8 (450NS)	CXK5816PN-15L
20	1	U6	321-6303	MICROPROCESSOR CMOS	HD6303YP
21	0	U2^	322-7128	16Kx8 250NS EPROM	27128TMS
22	1	U1	324-4374	OCTAL DFF REG	MC74HC374N
23	1	U9	324-4393	DUAL 4 BIT COUNTER	MC74HC393
24	1	U4	324-7400	QUAD NAND	MC74HC00
25	1	U8	324-7408	QUAD 2 IN AND	74HC08
26	1	U5	324-7414	HEX SCHMIDT	74HC14
27	1	CR2	342-0001	SILICON 1A 100V .50 SP	1N4002
28	5	CR3,CR4,CR5,CR6,CR7	342-3009	SILICON .50 SP	1N4148
29	1	CR1	343-3017	1/2 WATT 6.2V 5% .25 SP	1N5234B
30	1	Y1 (NOTE 2)	376-0004	4.000 MHz HC 18 CASE	SKO-DS400A
31	2	J4,J5	401-0009	12-POS THRU PCB	22-14-2124
32	0	J1/	401-0015	12 POS BLOCK MALE	1103.6
33	1	P3	401-0029	3 PIN POWER CONN	10-18-1032
34	0	P4/,P5/	401-0078	4 PIN TELCO MNT	520257-2
35	1	JP3,JP10/,JP11/,JP12/, JP13/	403-0002	2 OF 401-0052	
36	1	JP2/,JP5/,JP6,JP7/,JP8/, JP9/	403-0003	3 OF 401-0052	
37	1	JP1	403-0004	4 OF 401-0052	
38	1	J3	407-0016	SKT, 16 PIN DIP	640358-3
39	0	JP4/	408-0001	WIRE JUMPER (24GA WIRE .35)	
40	1	F1	416-1576	FUSE AGC 1 A	AGC 1
41	1	XVR1	210-0001	KEPT NUT	
42	1	XVR1	220-0102	440X3/8 PAN PHILLIPS	

INSTANT CALL PANEL DRIVER PARTS LIST (702-9023-1G) (cont'd)

Item	Quantity	Reference	Part	Description	Mfg.Part No.
43	1	XVR1	381-0010	HEATSINK TO-220	
44	3	XJP3 (IN) XJP6 (POS A) XJP1 (C)	402-3040	MINI JUMPER	
45	4	XU4,XU5,XU8,XU9	407-0014	SKT, 14 PIN DIP	
46	1	XU7	407-0016	SKT, 16 PIN DIP	
47	1	XU1	407-0020	SKT, 20 PIN DIP	
48	1	XU3	407-0024	SKT, 24 PIN DIP	
49	1	XU2	407-0028	SKT, 28 PIN DIP	
50	1	XU6	407-0064	SKT, 64 PIN DIP	
51	6	XJP11 (IN) XJP5,,XJP7,XJP9 (POS A) XJP2,XJP8 (POS B)	408-0001	WIRE JUMPER (24GA WIRE .35)	
52	2	XF1	416-3040	FUSE CLIP	
53	1	PCB	410-9023F	LED/KEYBOARD DRIVER	
54	A/R	XVR1	561-0001	THERMAL COMPOUND	

NOTES:

1. MOUNT 5W RESISTOR APPROX. .125" OFF PCB SURFACE.
2. SECURE COMPONENT TO BOARD USING 22GA. WIRE OR EQUIV.
3. ON SOLDER SIDE JUMPER RX1 FROM CR5 CATHODE TO U5.14 (VCC).

INSTANT CALL PANEL DRIVER PARTS LIST (702-9023-2J)

LEGEND:
+ = OPTION
/ = NOT INSTALLED
^ = INSTALLED ON HIGHER ASSY

Item	Quantity	Reference	Part	Description	Mfg.Part No.
1	3	R5,R6,R7	101-0057	220 OHM 1/4W 5% CARBON FILM	
2	1	R2	101-0089	4.7K 1/4W 5% CARBON FILM	
3	1	RX1 (NOTE 3)	101-0097	10K 1/4W 5% CARBON FILM	
4	1	R3	101-0125	150K 1/4W 5% CARBON FILM	
5	1	R4	101-0138	510K 1/4W 5% CARBON FILM	
6	1	R1 (NOTE 1)	103-3050	5 OHM 5W 5% CARBON FILM	PW PW5
7	1	RV1	105-0002	VARISTOR 14V AC	V22ZA3
8	1	RP2	119-0006	10K x 9 R-SIP	4610X-101-103
9	1	RP1	119-0008	10K x 7 R-SIP	EXB-P8E103G or J
10	3	C4,C8,C16	150-0110	.01 UF 50V 80%-20% CERAMIC DISC	DF-103Z
11	2	C9,C10	151-0022	22PF 50V +-10%	CN15C220K
12	1	C6	151-0180	.1 UF 50V +-10% CERAMIC, UNSTABLE	AVXSR205E104MAA
13	3	C3,C5,C7	154-0025	1 UF 35V TANTALUM	ECS-F-35E1
14	5	C1,C11/,C12,C13,C14,C15	155-0052	10 UF 35V +-20% RADIAL ALUMINUM ELECTROLYTIC	ECEA1VU100
15	1	C2	155-0077	100UF 25V +-20% RADIAL ALUMINUM ELECTROLYTIC	ECEA1EU101
16	0	LS1/	305-0002	AUDIO SPEAKER	AT-02
17	1	U7	316-0232	RS232 DRIVER	AD232JN
18	1	VR1	316-7805	REGULATOR, +5V 1.5A	LM340T-5
19	1	U3	321-6116	RAM 2Kx8 (450NS)	CXK5816PN-15L
20	1	U6	321-6303	MICROPROCESSOR CMOS	HD6303YP
21	1	U2 (NOTE 4)	322-7128	16Kx8 250NS EPROM	27128TMS
22	1	U1	324-4374	OCTAL DFF REG	MC74HC374N
23	1	U9	324-4393	DUAL 4 BIT COUNTER	MC74HC393
24	1	U4	324-7400	QUAD NAND	MC74HC00
25	1	U8	324-7408	QUAD 2 IN AND	74HC08
26	1	U5	324-7414	HEX SCHMIDT	74HC14
27	1	CR2	342-0001	SILICON 1A 100V .50 SP	1N4002
28	5	CR3,CR4,CR5,CR6,CR7	342-3009	SILICON .50 SP	1N4148
29	1	CR1	343-3017	1/2 WATT 6.2V 5% .25 SP	1N5234B
30	1	Y1 (NOTE 2)	376-0004	4.000 MHz HC 18 CASE	SKO-DS400A
31	2	J4,J5	401-0009	12-POS THRU PCB	22-14-2124
32	1	J1	401-0015	12 POS BLOCK MALE	1103.6
33	0	P3/	401-0029	3 PIN POWER CONN	10-18-1032
34	0	P4/,P5/	401-0078	4 PIN TELCO MNT	520257-2
35	1	JP3,JP10/,JP11/,JP12/, JP13/	403-0002	2 OF 401-0052	
36	1	JP2/,JP5/,JP6,JP7/,JP8/, JP9/	403-0003	3 OF 401-0052	
37	1	JP1	403-0004	4 OF 401-0052	
38	0	J3/	407-0016	SKT, 16 PIN DIP	640358-3
39	0	JP4/	408-0001	WIRE JUMPER (24GA WIRE .35)	
40	1	F1	416-1576	FUSE AGC 1 A	AGC 1
41	1	XVR1	210-0001	KEPT NUT	

INSTANT CALL PANEL DRIVER PARTS LIST (702-9023-2J) (cont'd)

Item	Quantity	Reference	Part	Description	Mfg.Part No.
42	1	XVR1	220-0102	440X3/8 PAN PHILLIPS	
43	1	XVR1	381-0010	HEATSINK TO-220	
44	3	XJP3 (IN) XJP1,XJP6 (POS A)	402-3040	MINI JUMPER	
45	4	XU4,XU5,XU8,XU9	407-0014	SKT, 14 PIN DIP	
46	1	XU7	407-0016	SKT, 16 PIN DIP	
47	1	XU1	407-0020	SKT, 20 PIN DIP	
48	1	XU3	407-0024	SKT, 24 PIN DIP	
49	1	XU2	407-0028	SKT, 28 PIN DIP	
50	1	XU6	407-0064	SKT, 64 PIN DIP	
51	5	XJP11 (IN) XJP5,XJP9 (POS A) XJP2,XJP8 (POS B)	408-0001	WIRE JUMPER (24GA WIRE .35)	
52	2	XF1	416-3040	FUSE CLIP	
53	1	PCB	410-9023F	LED/KEYBOARD DRIVER	
54	A/R	XVR1	561-0001	THERMAL COMPOUND	

NOTES:

1. MOUNT 5W RESISTOR APPROX. .125" OFF PCB SURFACE.
2. SECURE COMPONENT TO BOARD USING 22GA. WIRE OR EQUIV.
3. ON SOLDER SIDE JUMPER RX1 FROM CR5 CATHODE TO U5.14 (VCC).
4. TO BE PROGRAMMED AND INSTALLED BY PROD. TECH.

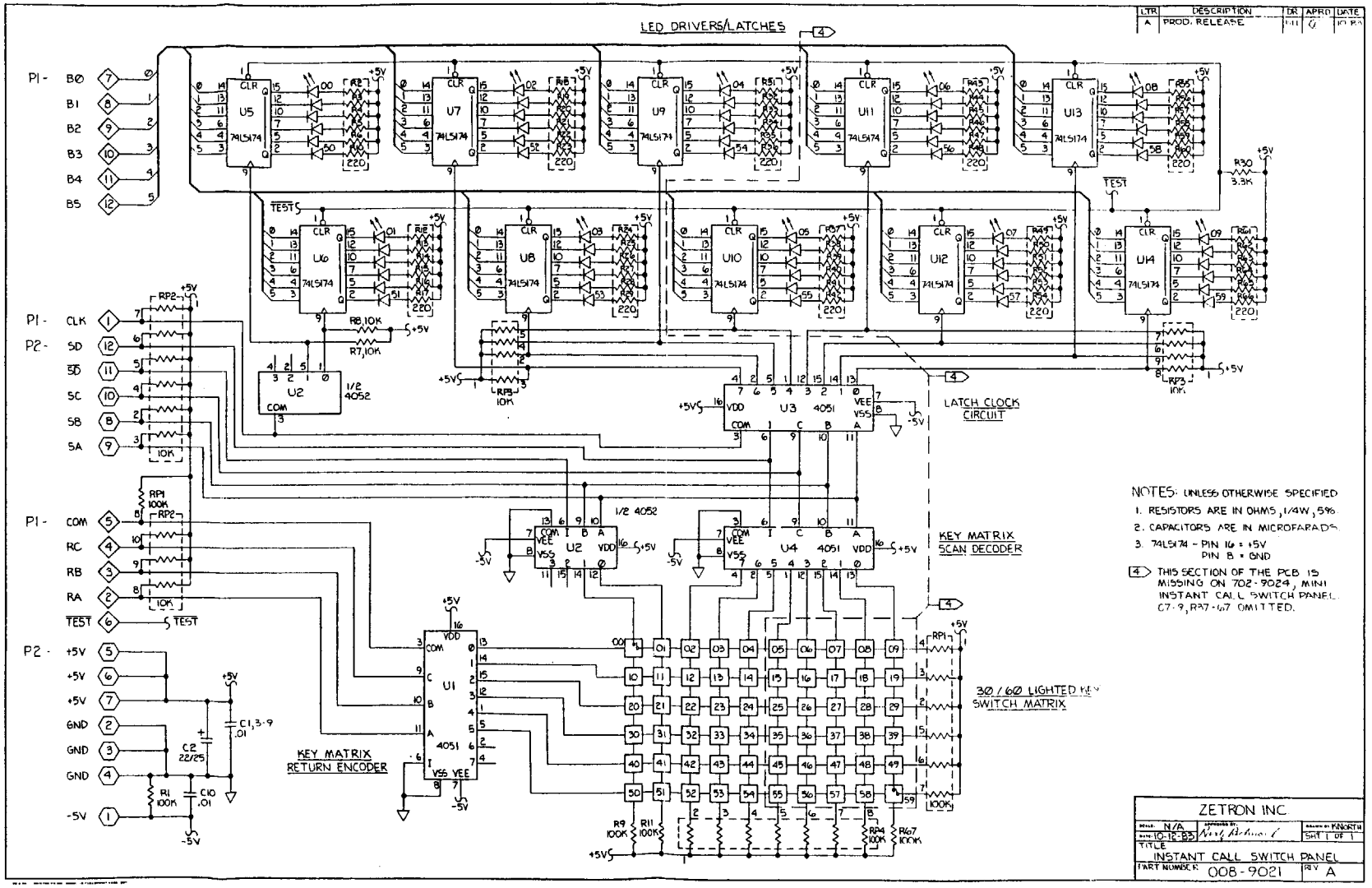
LTR DESCRIPTION DR APRD DATE
A PROD. RELEASE
LED DRIVERS/LATCHES
LATCH CLOCK CIRCUIT
KEY MATRIX SCAN DECODER
KEY MATRIX RETURN ENCODER
30/60 LIGHTED KEY SWITCH MATRIX
NOTES: UNLESS OTHERWISE SPECIFIED
1. RESISTORS ARE IN OHMS, 1/4W, 5%.
2. CAPACITORS ARE IN MICROFARADS.
3. 74LS174 - PIN 16 = +5V
PIN 8 = GND
4 THIS SECTION OF THE PCB IS MISSING ON 702-9024, MINI INSTANT CALL SWITCH PANEL. C7-9, R37-67 OMITTED.
ZETRON INC.
SCALE N/A
DATE 10-12-83
DRAWN BY KNORTH
SHT 1 OF 1
TITLE INSTANT CALL SWITCH PANEL
PART NUMBER 008-9021
REV A

INSTANT CALL SWITCH PANEL PARTS I.D. (702-9021B.1)

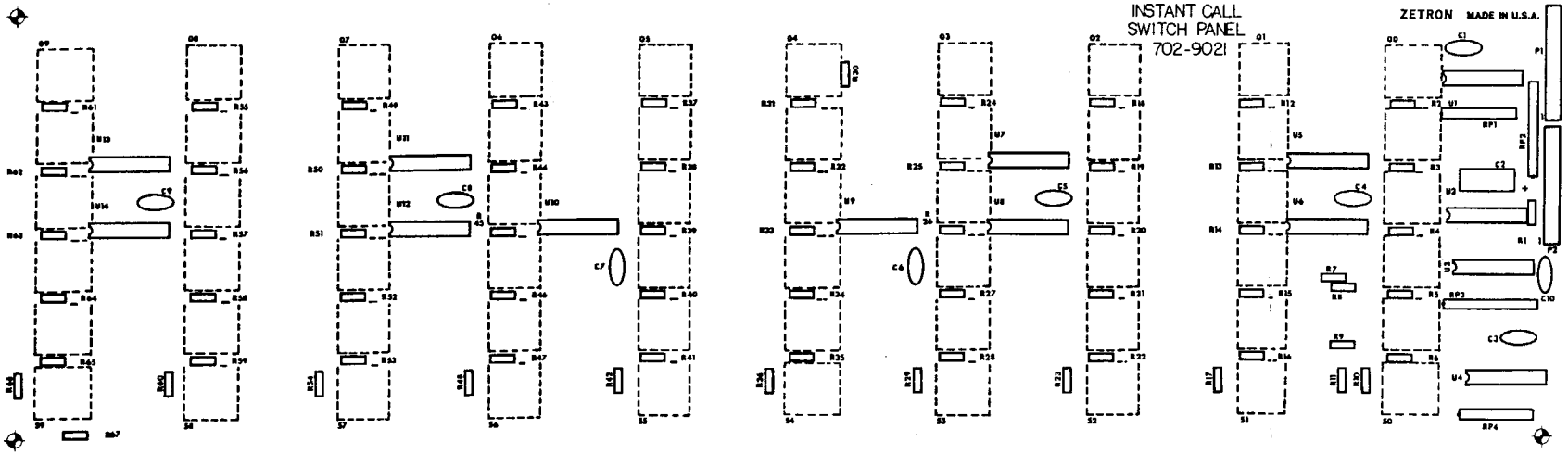

MINI INSTANT CALL PANEL PARTS I.D. (702-9024B)

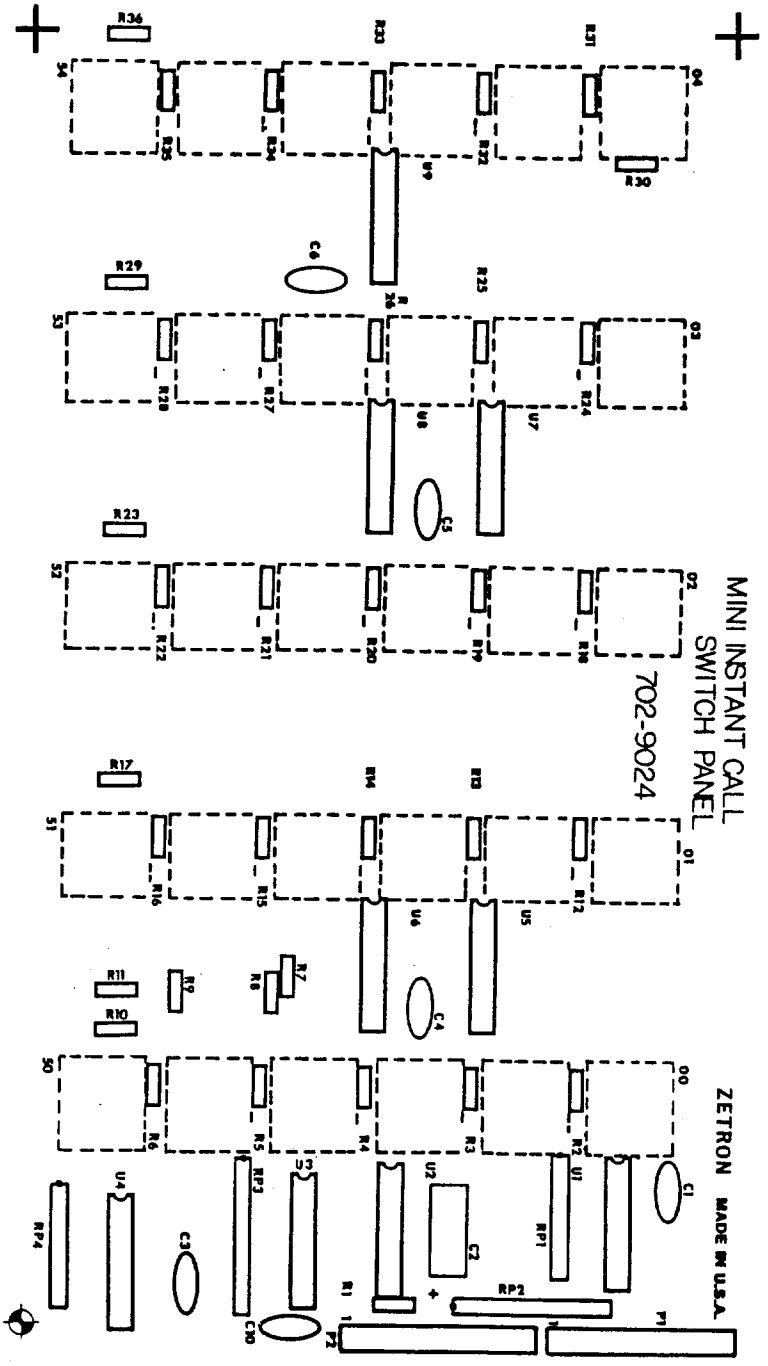

INSTANT CALL SWITCH PANEL PARTS LIST (702-9021B.1)

ITEM	QTY	ZETRON P/N	DESCRIPTION	COMPONENT REF.	MFR. PART #	MANUFACTURER
1.	60	101-0057	220 OHM .25W 5%	R2-6 10 12-29 R31-66		
2.	1	101-0085	3.3K .25W 5%	R30		
3.	2	101-0097	10K .25W 5%	R7 8		
4.	4	101-0121	100K .25W 5%	R1 9 11 67		
5.	2	119-0006	10K x 9 R-PAK	RP2 3		
6.	2	119-0007	100K x 7 R-PAK	RP1 4		
7.	9	150-0110	.01 UF 50V DISC	C1 3-10		
8.	1	155-0055	22 UF 25V AXIAL	C2		
9.	10	314-4174	HEX D-FF REG.	U5-14	74LS174	
10.	3	323-4051	1-8 ANALOG MUX.	U1 3 4	4051	
11.	1	323-4052	1-4 ANALOG MUX.	U2	4052	
12.	60	371-0004	KYSWITCH W/ LED	SW00-59	J-M 2004	SMK (JAPAN)
13.	2	403-1012	12 OF 401-0036	P1 2		
14.	14	407-0016	SKT, 16 PIN DIP	(U1-14)		
15.	1	410-9021	P.C.B.	--	410-9021	ZETRON

MINI INSTANT CALL SWITCH PANEL PARTS LIST (702-9024B.1)

ITEM	QTY	ZETRON P/N	DESCRIPTION	REFERENCE
1.	30	101-0057	220 OHM	R2-6 10 12-29 R31-36
2.	1	101-0085	3.3K	R30
3.	2	101-0097	10K	R7 8
4.	3	101-0121	100K	R1 9 11
5.	2	119-0006	10K x 9 R-PAK	RP2 3
6.	2	119-0007	100K x 7 R-PAK	RP1 4
7.	6	150-0110	.01 UF 50V DISC	C1 3-6 10
8.	1	155-0055	22 UF 25V AXIAL	C2
9.	5	314-4174	HEX D-FF REG.	U5-9
10.	3	323-4051	1-8 ANALOG MUX.	U1 3 4
11.	1	323-4052	1-4 ANALOG MUX.	U2
12.	30	371-0004	KYSWITCH W/ LED	SW00-04, 10-14 SW20-24, 30-34 SW40-44, 50-54
13.	24	403-2012	12 OF 401-0178	P1 2
14.	9	407-0016	SKT, 16 PIN DIP	(U1-9)
15.	1	410-9024A	P.C.B.	

REV	DESCRIPTION	DRN	APV	DATE
G	HCN 1989	GH	LNK	

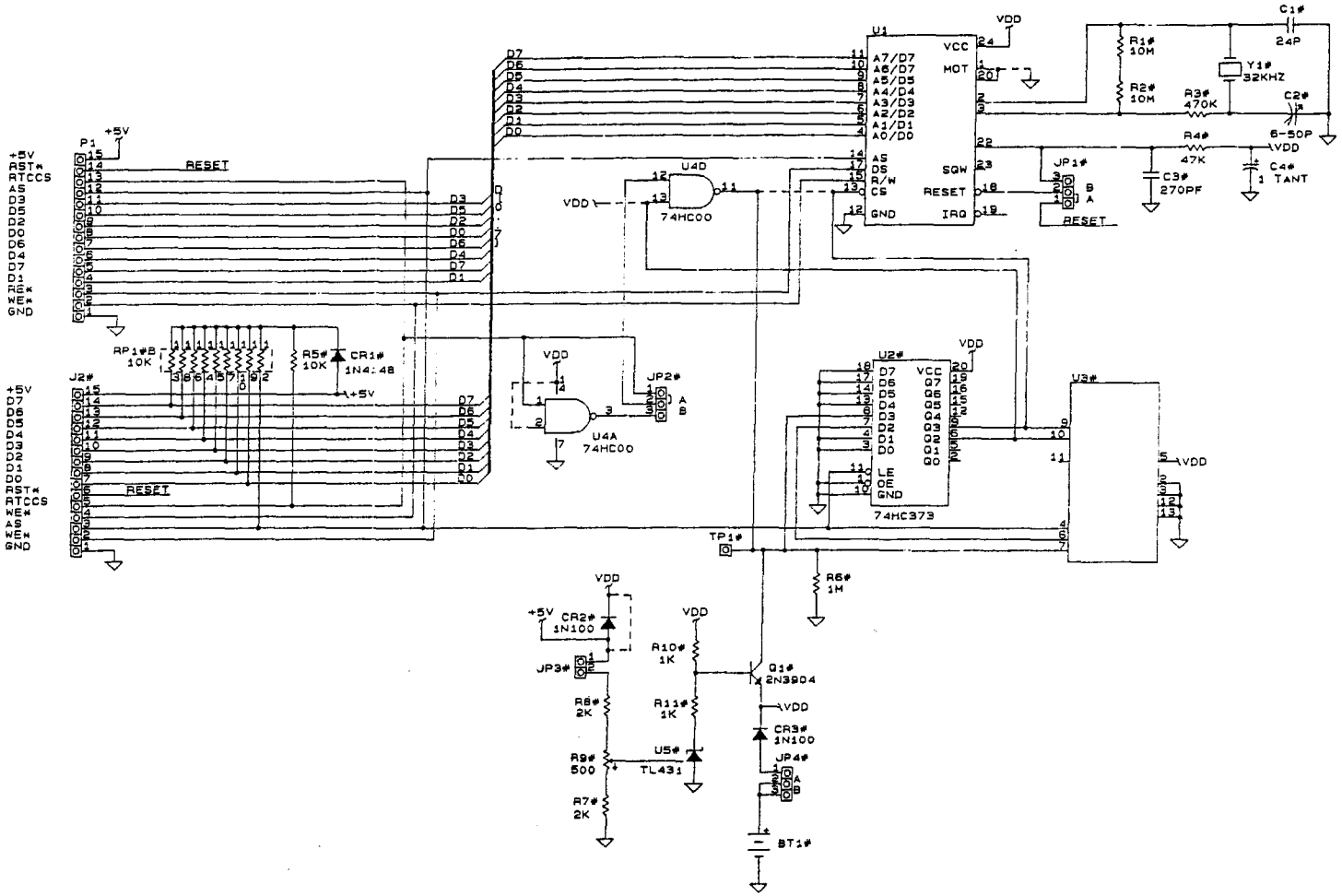

NOTES: UNLESS OTHERWISE SPECIFIED:

1. ALL CAPACITORS ARE IN MICROFARADS.
2. ALL RESISTORS ARE IN OHMS, 1/4W, 5%.
3. ALL POTENTIOMETERS ARE 1 TURN.

UNUSED PARTS:

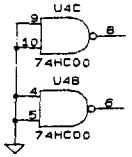

LEGEND:

+	OPTION, INSTALL PER CUSTOMER ORDER.
^	INSTALLED ON HIGHER ASSEMBLY.
#	NOT INSTALLED.
——X——	CUT TRACE.
- - - - - - - - - - -	JUMPER WIRE.

ZETRON INCORPORATED
12335 134TH COURT NORTHEAST
REDMOND, WASHINGTON 98052-2433

Title: M25 REAL TIME CLOCK

Size	Document Number	REV
B	008-9028	G

Date: January 11, 1993 Sheet 1 of 1

REAL TIME CLOCK BOARD PARTS I.D. (702-9028G)

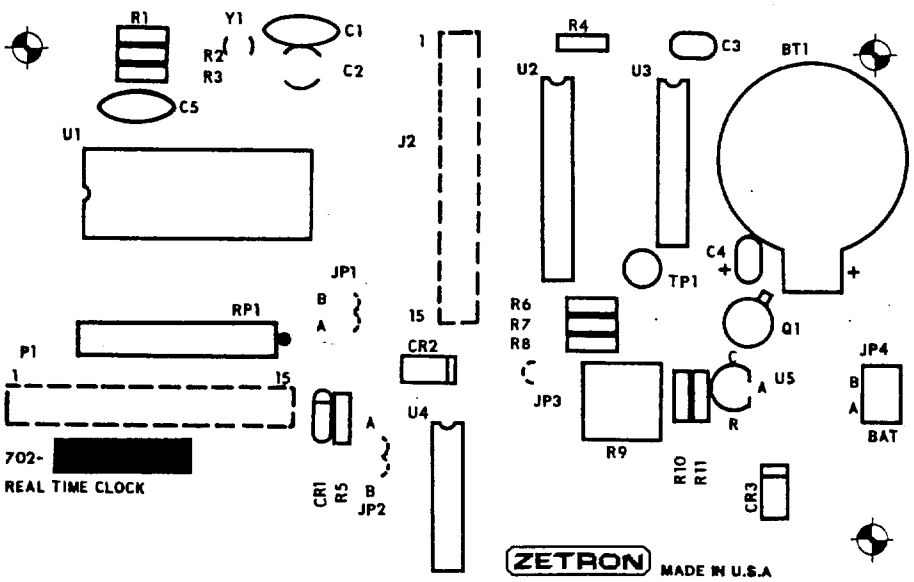

REAL TIME CLOCK PARTS LIST (702-9028G)

LEGEND:
= NOT INSTALLED
^ = INSTALLED ON HIGHER ASSY
+ = OPTION (INSTALLED PER CUSTOMER ORDER)

ITEM	QTY	COMPONENT REFERENCE	PART NO.	DESCRIPTION	MANUFACTURE P/N
1	0	R10#,R11#	101-0073	1K 1/4W 5% CARBON FILM	
2	0	R8#,R7#	101-0080	2K 1/4W 5% CARBON FILM	
3	0	R5#	101-0097	10K 1/4W 5% CARBON FILM	
4	0	R4#	101-0113	47K 1/4W 5% CARBON FILM	
5	0	R3#	101-0137	470K 1/4W 5% CARBON FILM	
6	0	R6#	101-0145	1M 1/4W 5% CARBON FILM	
7	0	R1#,R2#	101-0160	10M 1/4W 5% CARBON FILM	
8	0	R9#	107-0500	500 OHM POT 1 TURN	3386P-1-501
9	0	RP1#	119-0006	10K x 9 R-SIP	4610X-101-103
10	0	C1#	150-0024	24 PF 1KV +-10% CERAMIC DISC	GG-240K
11	0	C3#	151-0027	270PF 50V +-10% CERAMIC, TEMPERATURE STABLE	CW15C271K
12	0	C2#	153-0010	6-50PF CERAMIC	TZ03Z 500E
13	0	C4#	154-0025	1 UF 35V TANTALUM	ECS-F-35E1
14	0	U5#	316-0431	SHUNT REG	TL431
15	1	U1	323-1287	REAL TIME CLOCK	DS1287
16	0	U2#	324-4373	OCTAL LATCH	MC74HC373
17	1	U4	324-7400	QUAD NAND	MC74HC00
18	0	Q1#	340-3904	NPN 40V/200MA	2N3904
19	0	CR2#,CR3#	342-3008	GERMANIUM .50 SP	1N100
20	0	CR1#	342-3009	SILICON .50 SP	1N4148
21	0	Y1#	376-0038	32 KHz	NC 38
22	0	TP1#	403-0001	1 OF 401-0052	
23	0	JP3#	403-0002	2 OF 401-0052	
24	0	JP1#,JP2#,JP4#	403-0003	3 OF 401-0052	
25	1	P1,J2# NOTE 5	405-1015	15 OF 401-0065	
26	0	BT1#	416-0002	LITH CELL BATT	BR2325
27	1	XU4	407-0014	SKT, 14 PIN DIP	
28	1	XU1	407-0024	SKT, 24 PIN DIP	
29	2	XJP1,2 (A-POS)	408-0001	WIRE JUMPER	
30	1	PCB	410-9028B	PCB, M25 REAL TIME CLOCK	

NOTES: ON SOLDER SIDE

1. WIRE JUMPER ACROSS LEADS OF CR2
2. WIRE JUMPER FROM U1.1 TO U1.12.
3. WIRE JUMPER FROM U1.13 TO U2.8.
4. WIRE JUMPER FROM U4.13 TO U4.14.
5. INSERT P1 FROM SOLDER SIDE. SOLDER ON COMPONENT SIDE.

SPARE PARTS KIT PARTS LIST (951-9002F)

ITEM	QTY	ZETRON P/N	DESCRIPTION	REFERENCE	MFR PART #	MANUFACTURER
1.	1	103-3050	5 OHM 5W 5%		PW PW5	TRW
2.	1	105-0002	VARISTIOR		V22ZA31	GE
3.	1	107-0502	50K POT 1 TURN		760-10-503	VRN
4.	2	150-0096	1000 PF IKV +-20%		GE-102G	MULTI-PROD
5.	2	150-0110	.01 UF CAP		DF-103Z	MULTI-PROD
6.	1	152-0100	.01 UF 25V POLY		SXKII0	MALLORY
7.	1	154-0025	1 UF 35V TANT		ECS-F-35E1	PANASONIC
8.	2	155-0050	10 UF 25V CAP		ECE-B2AV100S	PANASONIC
9.	2	155-0055	22 UF 25V CAP		ECE-B1EV220S	PANASONIC
10.	1	155-0080	100 UF 25V CAP		ECE-B1EV101S	PANASONIC
11.	1	155-0121	2200 UF 25V TUBULAR		ECET25R222SW	PANASONIC
12.	4	220-0108	440x1/4 SCREW		CLASS UNC2B	
13.	2	250-0020	440x3/8"L STANDOFF		8402	HH SMITH
14.	1	305-0002	AUDIO TRANSDUCER		AT-02	5TH DIM
15.	1	305-0003	AUDIO XFMR 600 OHM		42TM016	MOUSER
16.	2	311-0008	OPTO ISOLATOR		4N26	
17.	1	311-0010	LED RED LAMP		5082-4650	TI
18.	1	311-0030	DUAL LED 7-SEG AMBER		LN5240K	PANASONIC
19.	1	314-4132	QUAD NAND SCHMITT		74LS132	TI
20.	1	314-4138	DECODER 1 OF 8		74LS138	TI
21.	2	314-4174	HEX D-FF REG W/CLR		74LS174	TI
22.	1	314-4373	OCTAL LATCH TS		74LS373	AMD
23.	1	314-7404	HEX INVERTER		74LS04	TI
24.	1	314-7422	QUAD NAND O C		74LS22	MOT
25.	1	314-7432	QUAD OR		74LS32	TI
26.	1	314-7474	DUAL D FLIP FLOP		74LS74	MOT
27.	1	315-7407	HEX BUFFER NON-INV OC HIV		7407	
28.	1	316-0353	OP-AMP, DUAL BIFET		LF353P	NATIONAL
29.	1	316-0323	REGULATOR		LM323K	ALMAC
30.	1	316-0386	AUDIO POWER AMP		LM386N-388	MOT
31.	1	316-3403	QUAD OP-AMP		MC3403P14	MOT
33.	1	316-7805	REGULATOR +5V 1.5A		LM340T-5	NAT
34.	1	317-1488	QUAD RS-232 DRIVER		MC1488	MOT
35.	1	317-1489	QUAD RS-232 RECEIVER		MC1489A	MOT
36.	1	321-6116	RAM 2Kx8 (450NS)		HM 6116 P-4	HITACHI
37.	1	321-6265	RAM 8Kx8 CMOS		HM 6265	HITACHI
38.	1	321-6803	MICROPROCESSOR		MC6803P	MOT
39.	1	321-6820	PIA		MC6821	MO
40.	1	321-6840	PTM		MC6840	MOT
41.	1	323-4015	DUAL 4-BIT SHIFT REG		MC14015B	MOT
42.	2	323-4051	1-TO-8 ANALOG MUX/DEMUX		MC14051B	MOT
43.	1	323-4052	DUAL 4-CHAN ANALOG MUX		MC14052B	MOT
44.	1	323-4066	QUAD ANALOG SWITCH		MC14066B	MOT
45.	1	323-4093	QUAD NAND SCHMITT		MC14093B	MOT
46.	1	324-4132	QUAD NAND SCHMIDT		74HC132	
47.	1	326-7400	QUAD DECODE		74F00	
48.	1	340-0800	NPN DARL		MJE800	
49.	1	340-2003	RELAY DRIVER 50V/.5A		ULN2003	
50.	2	340-3394	NPN GEN		2N3394	MOT
51.	2	340-3904	NPN GEN		2N3904	

SPARE PARTS KIT PARTS LIST (951-9002F) cont'd

ITEM	QTY	ZETRON P/N	DESCRIPTION	REFERENCE	MFR PART #	MANUFACTURER
52.	1	342-0001	SILICON 1A 100V		1N4002	MOT
53.	1	342-0750	SILICON 6A 50V		MBR750/752	MOT
54.	2	342-3008	GERMANIUM		1N100	GE
55.	2	342-3009	SILICON		1N4148	
56.	4	342-3011	SILICON 1A		IN4007	
57.	1	343-3100	1W 8.2V +-5%		1N4738A	MOT
58.	1	343-3108	1W 15V +-5%		1N4744A	MOT
59.	1	371-0002	SINGLE KEY		82YY-3101-890	GRAYHILL
60.	2	371-0004	SINGLE KEY-RED LED		JM2004#01	SMK
61.	1	373-0116	KEYBOARD 0-9,#,*,A-D X-Y		KEA5A902	ALPS
62.	1	376-0245	2.4576 MHZ DATA COMM		2.4576MHZ-HC33	NEC
63.	1	376-0358	CRYSTAL 3.58 MHz		SKO-DS357	
64.	2	380-0030	DPDT 12V RELAY		DN1495S-2C-12V	
65.	1	401-0001	SPADE FEMALE		DVC18-250-FIC	PANDUIT
66.	1	401-0007	6-POS BLOCK FEMALE		5529.6	WEIDMULLER
67.	1	401-0016	12 POS BLOCK FEMALE		5164.6	WEIDMULLER
68.	1	401-0029	3 PIN POWER CONN		10-18-1032	MOLEX
69.	1	401-0031	3 COND HOOD .093 PINS		03-09-1032	MOLEX
70.	3	401-0032	.093 PINS		02-09-1103	MOLEX
71.	2	402-3040	MINI JMPR		65474-004	BERG
72.	1	415-9086	LONG STRAIN RELIEF		MODEL 25	
73.	1	415-9087	SHORT STRAIN RELIEF		MODEL 25	
74.	1	416-1576	FUSE AGC 1 A		AGC 1	LITTLEFUSE
75.	1	416-6025	FUSE ACC 2ASB-LITTLEFUSE		AGC 2.5ASB	BUSSMAN
76.	1	601-0028	DECODE PROM			
77.	1	802-0059	+5/-12VDC CONVERTER		CB3811	ELPAC

8. APPENDICES

Appendix A - format specifications 8-1
Motorola and G.E. tone group frequencies 8-1
Motorola and G.E. code plans 8-2
General encoding plans 8-3
Reach encoding plan 8-4
Zetron tone groups for Reach encoding 8-4
Reach code plan 8-4
5/6-tone frequencies and timings 8-5
DTMF tone pair frequencies and timing 8-5
Quick call one (two-plus-two) frequencies and timing 8-6
Digitone format 8-6
Golay sequential format 8-6

Appendix B - interfacing Model 25 to a Kustom ProKomm console.... 8-7
Method 1: direct channel keying 8-7
Method 2: momentary channel select 8-11

Appendix C - interfacing Model 25 to CAD systems 8-15
Computer-to-encoder interface 8-15
Command protocol 8-18
Computer port electrical specifications 8-20
Computer port physical specifications 8-20
Computer port communications protocol specifications 8-20
ASCII control character usage 8-21
Suggested remote control parameter programming 8-21

Appendix D - instant call labels 8-23

APPENDIX A - FORMAT SPECIFICATIONS

MOTOROLA AND G.E. TONE GROUP FREQUENCIES

Tone Number	Tone Groups						
	Mot 1	Mot 2	Mot 3	Mot 4	Mot 5	Mot 6	Mot A
0	330.5	569.1	1092.4	321.7	553.9	1122.5	358.9
1	349.0	600.9	288.5	339.6	584.8	1153.4	398.1
2	368.5	634.5	296.5	358.6	617.4	1185.2	441.6
3	389.0	669.9	304.7	378.6	651.9	1217.8	489.8
4	410.8	707.3	313.0	399.8	688.3	1251.4	543.3
5	433.7	746.8	953.7	422.1	726.8	1285.8	602.6
6	457.9	788.5	979.9	445.7	767.4	1321.2	668.3
7	483.5	832.5	1006.9	470.5	810.2	1357.6	741.3
8	510.5	879.0	1034.7	496.8	855.5	1395.0	822.2
9	539.0	928.1	1063.2	524.6	903.2	1433.4	912.0
A	none	none	none	none	none	none	1011.6
B	none	none	none	none	none	none	1122.1
Diagonal Tone:	569.1	979.9	569.1	569.1	979.9	979.9	979.9

Tone Number	Tone Groups						
	Mot B	Mot Z	GE A'	GE B'	GE C'	Mot 10	Mot 11
0	371.5	346.7	682.5	652.5	667.5	1472.9	1930.2
1	412.1	384.6	592.5	607.5	712.5	1513.5	1989.0
2	457.1	426.6	757.5	787.5	772.5	1555.2	2043.8
3	507.0	473.2	802.5	832.5	817.5	1598.0	2094.5
4	562.3	524.8	847.5	877.5	862.5	1642.0	2155.6
5	623.7	582.1	892.5	922.5	907.5	1687.2	2212.2
6	691.8	645.7	937.5	967.5	952.5	1733.7	2271.7
7	767.4	716.1	547.5	517.5	532.5	1781.5	2334.6
8	851.1	794.3	727.5	562.5	577.5	1830.5	2401.0
9	944.1	881.0	637.5	697.5	622.5	1881.0	2468.2
A	1047.1	977.2	none	none	none	none	none
B	1161.4	1084.0	none	none	none	none	none
Diagonal Tone:	979.9	979.9	742.5	742.5	742.5	none	none

MOTOROLA AND G.E. CODE PLANS

Pager Cap-Code	Code Plans Mot B Groups	Mot C Groups	Mot D Groups	Mot E Groups	Mot F Groups	Mot G Groups	Mot H Groups	Mot J Groups	Mot K Groups
0xx	2+4	N/A	N/A	N/A	N/A	N/A	N/A	N/A	N/A
1xx	1+1	1+1	1+1	1+1	1+1	1+1	1+1	1+1	1+1
2xx	2+2	2+2	2+2	2+2	1+3	1+3	1+3	1+4	1+4
3xx	3+3	1+2	1+2	1+2	3+3	3+3	3+3	4+1	4+1
4xx	1+2	4+4	1+5	2+1	4+4	3+1	3+1	4+4	4+4
5xx	1+3	1+4	5+5	1+6	3+1	5+5	1+6	5+5	1+6
6xx	2+1	2+1	2+1	6+6	1+4	1+5	6+6	1+5	6+6
7xx	3+1	4+1	5+1	6+1	4+1	5+1	6+1	4+5	6+1
8xx	2+3	2+4	2+5	2+6	3+4	3+5	3+6	5+4	4+6
9xx	3+2	4+2	5+2	6+2	4+3	5+3	6+3	5+1	6+4
Groups:	1,2,3,4	1,2,4	1,2,5	1,2,6	1,3,4	1,3,5	1,3,6	1,4,5	1,4,6

Pager Cap-Code	Code Plans Mot L Groups	Mot M Groups	Mot N Groups	Mot P Groups	Mot Q Groups	Mot R Groups	Mot S Groups	Mot T Groups	Mot U Groups
0xx	N/A	4+2	4+2	4+2	4+2	4+2	4+2	4+2	4+2
1xx	1+1	2+3	2+3	2+3	2+4	2+4	2+5	3+4	3+4
2xx	1+5	2+2	2+2	2+2	2+2	2+2	2+2	4+3	4+3
3xx	5+1	3+3	3+3	3+3	4+2	4+2	5+2	3+3	3+3
4xx	1+6	4+4	3+2	3+2	4+4	4+4	2+6	4+4	4+4
5xx	5+5	3+2	5+5	2+6	5+5	2+6	5+5	5+5	3+6
6xx	6+6	2+4	2+5	6+6	2+5	6+6	6+6	3+5	6+6
7xx	6+1	4+2	5+2	6+2	4+5	6+2	6+2	4+5	6+3
8xx	5+6	3+4	3+5	3+6	5+4	4+6	5+6	5+4	4+6
9xx	6+5	4+3	5+3	6+3	5+2	6+4	6+5	5+3	6+4
Groups:	1,5,6	2,3,4	2,3,4,5	2,3,4,6	2,4,5	2,4,6	2,5,6	2,3,4,5	2,3,4,6

Pager Cap-Code	Code Plans Mot V Groups	Mot W Groups	Mot Y Groups	Mot MT Groups	GE X Groups	GE Y Groups	GE Z** Groups	SPL EXT Groups
0xx	4+2	4+2	N/A	4+2	A′+A′	B′+B′	A′+A′	10+10
1xx	3+5	4+6	A+A	1+1	B′+A′	C′+B′	C′+A′	11+11
2xx	5+3	6+4	B+B	2+2	B′+B′	C′+C′	C′+C′	10+11
3xx	3+3	5+6	Z+Z	1+2	A′+B′	B′+C′	A′+C′	11+10
4xx	3+6	4+4	A+B	4+4	C′+C′	N/A	N/A	3+10
5xx	5+5	5+5	A+Z	5+5	C′+A′	N/A	N/A	6+10
6xx	6+6	6+6	B+A	2+1	C′+B′	N/A	N/A	3+11
7xx	6+3	4+5	Z+A	4+5	A′+C′	N/A	N/A	6+11
8xx	5+6	5+4	B+Z	5+4	B′+C′	N/A	N/A	10+ 6
9xx	6+5	6+5	Z+B	2+4	N/A	N/A	N/A	11+ 6
Groups:	2,3,4,5,6	2,4,5,6	A,B,Z	1,2,4,5	A′,B′,C′	B′,C′	A′,C′	3,6,10,11

Notes: **G.E. 100-call plan Z is tone groups C′+C′; use (100-Call format).
For cap-codes ending in double-digits using tone group twice,
(example: 122 in code plan C), use diagonal as one of the tones.

GENERAL ENCODING PLANS

Pager Cap-Code	General Plan Tone Groups	General Plan Diagonal Tone	Modified General Plan Tone Groups	Modified General Plan Diagonal Tone	General Alternate Plan Pager Cap-Code	General Alternate Plan Tone Groups
0xx	4+2	N/A	N/A	N/A	0xx	N/A
1xx	1+1	569.1	1+1	569.1	1xx	953.7 + Mot 1
2xx	2+2	979.9	2+2	979.9	2xx	953.7 + Mot 2
3xx	1+2	N/A	3+3	569.1	3xx	979.9 + Mot 2
4xx	4+4	569.1	4+4	569.1	4xx	953.7 + Mot 4
5xx	5+5	979.9	5+5	979.9	5xx	953.7 + Mot 5
6xx	2+1	N/A	6+6	979.9	6xx	979.9 + Mot 1
7xx	4+5	N/A	N/A	N/A	7xx	979.9 + Mot 5
8xx	5+4	N/A	N/A	N/A	8xx	979.9 + Mot 4
9xx	2+4	N/A	N/A	N/A		
**Axx	3+3	569.1	N/A	N/A		
Tone Groups:	1,2,3,4,5		1,2,3,4,5,6			

Notes: 1) On General and Modified General plans, there are different diagonal tones for different pager blocks.
2) **General has an eleventh pager block with cap-codes 'Axx', which is not coded on the Model 25.
3) For General Alternate Code Plan, last two digits of cap-code are the same as each other.

REACH ENCODING PLAN

Tone Number	Freq.	Tone Number	Freq.	Tone Number	Freq.	Tone Number	Freq.
0	3960.0	15	2354.0	30	1400.0	45	832.0
1	3824.0	16	2274.0	31	1352.0	46	804.0
2	3694.0	17	2196.0	32	1306.0	47	776.0
3	3568.0	18	2121.0	33	1261.0	48	750.0
4	3446.0	19	2049.0	34	1219.0	49	725.0
5	3329.0	20	1980.0	35	1177.0	50	700.0
6	3215.0	21	1912.0	36	1137.0	51	676.0
7	3106.0	22	1847.0	37	1098.0	52	653.0
8	3000.0	23	1784.0	38	1061.0	53	631.0
9	2898.0	24	1723.0	39	1025.0	54	609.0
10	2799.0	25	1664.0	40	990.0	55	588.0
11	2704.0	26	1608.0	41	956.0	56	568.0
12	2612.0	27	1553.0	42	923.0	57	549.0
13	2523.0	28	1500.0	43	892.0	58	530.0
14	2437.0	29	1449.0	44	862.0	59	512.0
						60	495.0

ZETRON TONE GROUPS FOR REACH ENCODING

Tone Number	Tone Groups Z1	Z2	Z3	Z4	Z5
0	1980.0	1177.0	1400.0	832.0	588.0
1	2704.0	1608.0	1912.0	1137.0	804.0
2	2612.0	1553.0	1847.0	1098.0	776.0
3	2523.0	1500.0	1784.0	1061.0	750.0
4	2437.0	1449.0	1723.0	1025.0	725.0
5	2354.0	1400.0	1664.0	990.0	700.0
6	2274.0	1352.0	1608.0	956.0	676.0
7	2196.0	1306.0	1553.0	923.0	653.0
8	2121.0	1261.0	1500.0	892.0	631.0
9	2049.0	1219.0	1449.0	862.0	609.0

REACH CODE PLAN

Pager Cap-Code	Indiv. Call Tone Groups x + y
0yx	Z5+Z3
1xy	Z1+Z2
2yx	Z2+Z1
3xy	Z3+Z4
4yx	Z4+Z3
5xy	Z1+Z4
6yx	Z4+Z1
7xy	Z1+Z5
8yx	Z5+Z1
9xy	Z3+Z5

Note that the ones/tens digit encoding, shown by 'x' and 'y' reverses position for each 100 pager block. In GE/Motorola plans, 1st tone is always tens digit, and 2nd tone is ones digit.

For REACH group call, 0xx group is not present. Instead, ten group calls are accessible using pager numbers 000,011,022, ... 099, that generate the ten group call tones from tone group Z1. The group calls activate 1st tone Z1 pagers (cap codes 1xx, 5xx, and 7xx).

5/6-TONE FREQUENCIES AND TIMINGS

	Tone Number	EIA	CCIR	ZVEI
freqs	0	600	1981	2400
in	1	741	1124	1060
Hz	2	882	1197	1160
	3	1023	1275	1270
	4	1164	1358	1400
	5	1305	1446	1530
	6	1446	1540	1670
	7	1587	1640	1830
	8	1728	1747	2000
	9	1869	1860	2200
2nd Addr	X	2010	2247	970
Repeat	R	459	2110	2600
timing	Preamble	673	673	673
in	Gap	65	65	65
msec	Tone	33	40	100
	X Tone	65	40	100

DTMF TONE PAIR FREQUENCIES AND TIMING

Key from 16 button keypad/frequencies in Hz

	Columns			
	1	2	3	4
Rows				
	--1--	--2--	--3--	--A--
1	697	697	697	697
	1209	1336	1477	1633
	--4--	--5--	--6--	--B--
2	770	770	770	770
	1209	1336	1477	1633
	--7--	--8--	--9--	--C--
3	852	852	852	852
	1209	1336	1477	1633
	--*--	--0--	--#--	--D--
4	941	941	941	941
	1209	1336	1477	1633

Timing: Variable. Typical is 150 milliseconds of tone, 50 milliseconds of silence.
Digits: 1 through 14, including A, B, C, D, * & #.

QUICK CALL ONE (TWO-PLUS-TWO) FREQUENCIES AND TIMING

Tone Number	A Series		B Series		Z Series	
	Freq.	Code	Freq.	Code	Freq.	Code
0	358.9	CA	371.5	CB	346.7	CZ
1	398.1	DA	412.1	DB	384.6	DZ
2	441.6	EA	457.1	EB	426.6	EZ
3	489.8	FA	507.0	FB	473.2	FZ
4	543.3	GA	562.3	GB	524.8	GZ
5	602.6	HA	623.7	HB	582.1	HZ
6	668.3	JA	691.8	JB	645.7	JZ
7	741.3	KA	767.4	KB	716.1	KZ
8	822.2	LA	851.1	LB	794.3	LZ
9	912.0	MA	944.1	MB	881.0	MZ
A	1011.6	NA	1047.1	NB	977.2	NZ
B	1122.1	PA	1161.4	PB	1084.0	PZ

Timing: Variable.
Typical timing: 1250 ms 1st tone pair
0 ms gap
1000 ms 2nd tone pair
5000 ms group call (if 1st and 2nd tone pairs are same)

DIGITONE FORMAT

6-Digit Capcode Range: 000000-655354

First 5 digits - Address 00000-65535
Sixth digit - Function Code 0-4 (0=cancel function)
Selectable number of repeats = 3-9 (4 normal)

GOLAY SEQUENTIAL FORMAT

7-Digit Capcode

First 6 digits - Address NNNNNN
Seventh digit - Function 0-9
Allows tone, voice, and message paging.

APPENDIX B - INTERFACING THE MODEL 25 TO A KUSTOM PROKOMM CONSOLE

METHOD 1: Direct Channel Keying

Via the direct channel keying method, the Model 25 encoder may be made to transmit over the channels currently 'selected' on the ProKomm console and/or it may be made to directly control the transmission on up to eight of the console's channels. The encoder using this keying method will not alter the 'selected' state of any channels on the ProKomm console since the encoder is directly controlling the transmission via the channel's P.T.T. This method will allow simulcasting on any combination of the eight connected channels.

The encoder connects to the ProKomm console at three different types of circuit boards; the T/R (transmit/receive) boards of the channels to be controlled, the Auxiliary board, and the Power Distribution board. A description of the important console signals follow.

BOARD	PIN SIGNAL	DESCRIPTION
T/R Board	(30) Aux Audio	This audio is transmitted over the channel when it is keyed.
	(36) Aux P.T.T.	This keys the channel when grounded.
	(66) Crossbusy	This shows that the channel-is-busy when it is at or near ground.
Auxiliary Board	(70) RMT Aux Audio	This audio is transmitted over all selected channels when remotely keyed.
	(81) RMT P.T.T.	This keys all of the selected channels when it is grounded.
Power Dist. Board	(J9-1) +12V DC	+12 volt DC power for the Model 25.
	(J9-2) GROUND	Ground (+12v return) for the Model 25.
	(J9-3) GROUND	Same as J9-2.

The interface between the Model 25 encoder and the ProKomm console depends on the console controlling features desired. The encoder may either control eight channels with no control over selected channels, or it may control seven channels with optional control over the console channels presently selected. Diagrams for both types of interfaces are shown below.

KUSTOM ProKomm CONSOLE, DIRECT CHANNEL KEYING INTERFACE FOR CONTROL OF EIGHT CHANNELS WITHOUT CONTROL OVER 'SELECTED' CHANNELS.

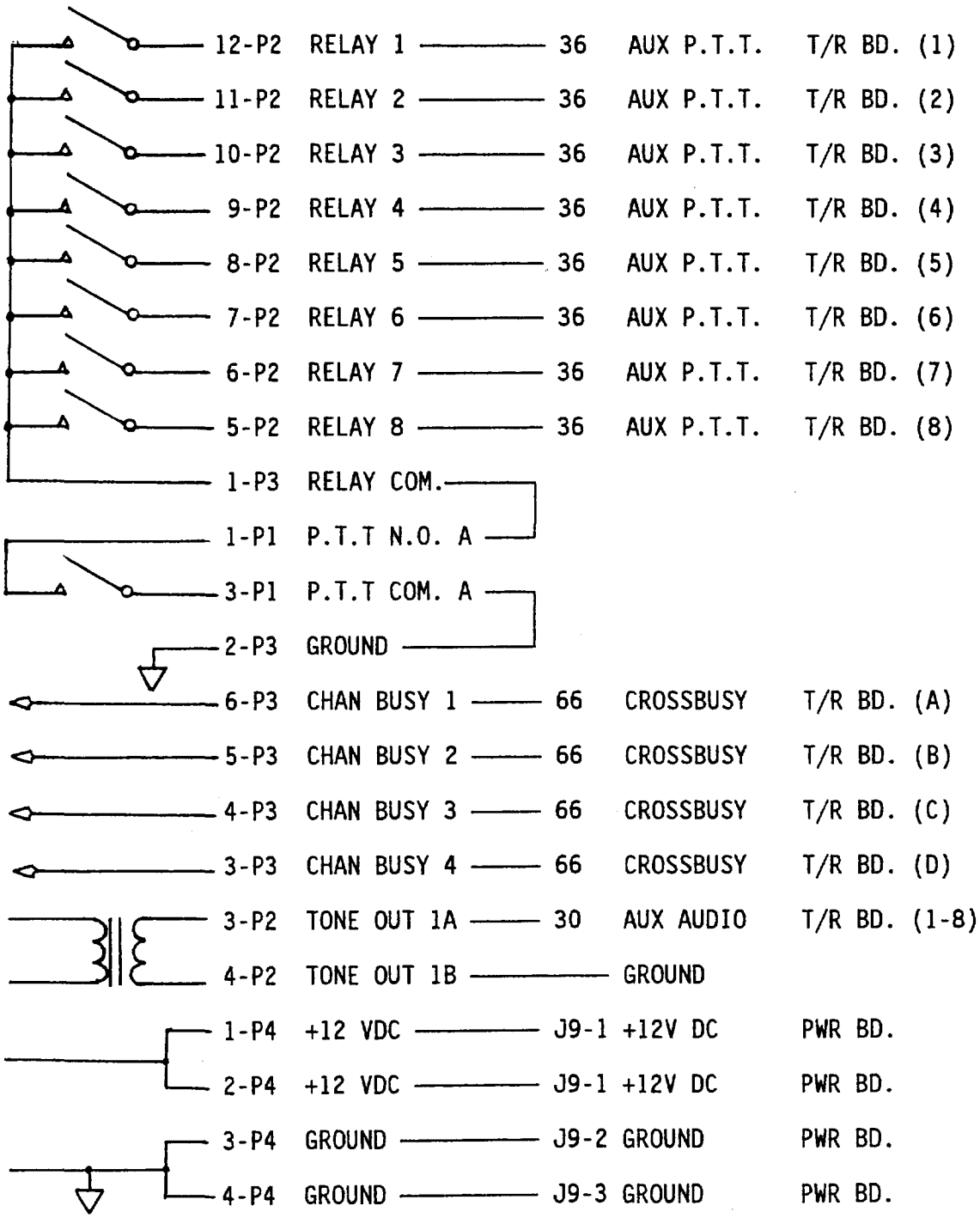

KUSTOM ProKomm CONSOLE, DIRECT CHANNEL KEYING INTERFACE FOR CONTROL OF SEVEN CHANNELS WITH CONTROL OVER 'SELECTED' CHANNELS.

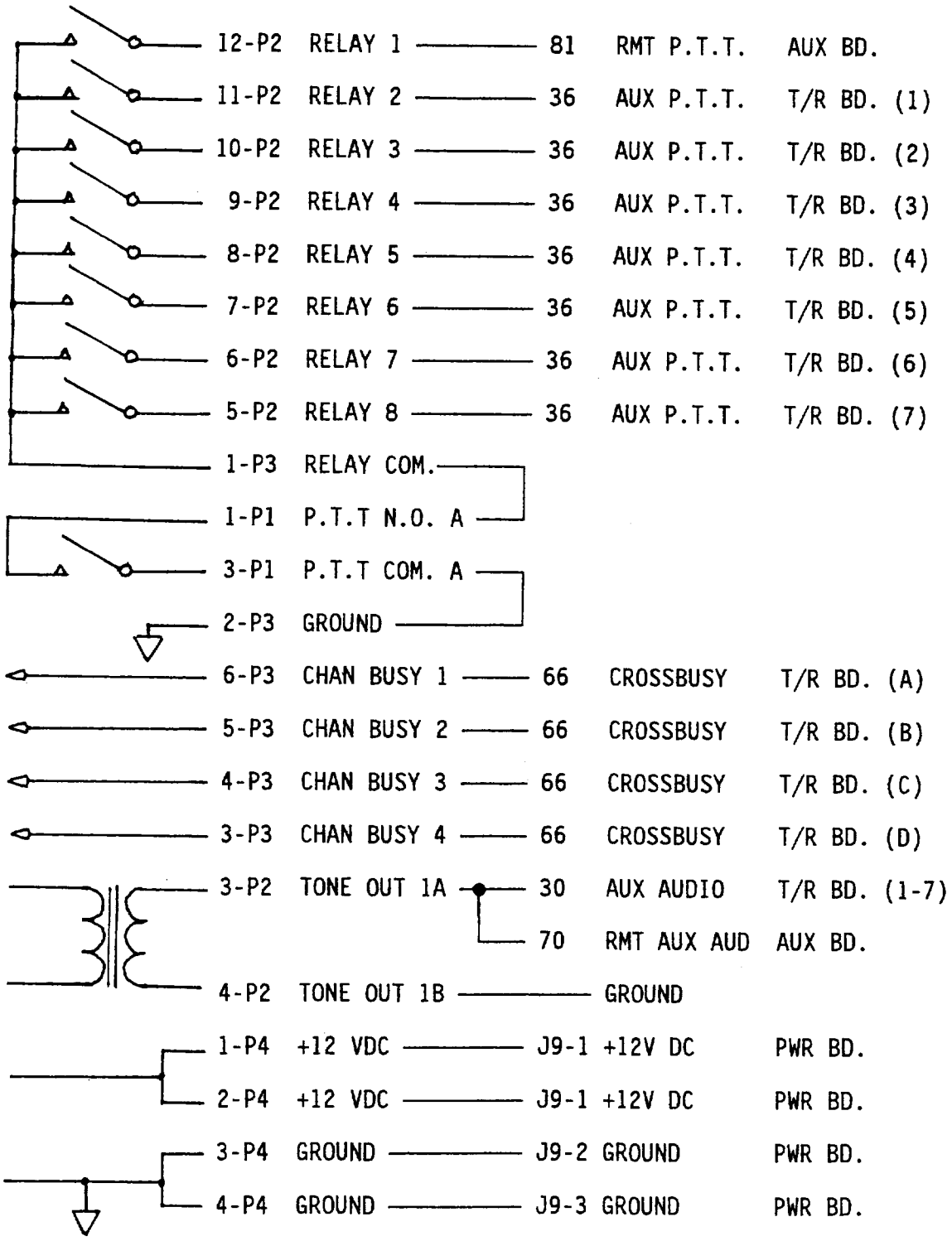

To allow the encoder to transmit over the console's 'selected' channels, one side of the encoder's 'TONE OUTPUT 1' must be connected to the console's 'RMT AUX AUDIO' input at the Auxiliary board. To also allow the encoder to control console channels, 'TONE OUTPUT 1' must also be bussed to the 'AUX AUDIO' of the T/R boards of each channel to be controlled. The other side of the encoder's 'TONE OUTPUT 1' should be grounded to the console's signal ground. A shielded wire may be desirable for the audio signal in order to shield against hum and noise. The encoder's eight control relays should be wired in series with one of the Normally Open contacts of the encoder's P.T.T. relay. The 'P.T.T. COM. A' of the encoder must be connected to ground. The encoder's 'P.T.T. N.O. A' must be connected to the encoder's 'RELAY COM.', the common point of the eight control relays. If transmission over the 'selected' channel is required, then 'RELAY 1' of the encoder must be connected to 'RMT P.T.T.' of the console's Auxiliary board. The remaining control relay connections of the encoder should be individually connected to the 'AUX P.T.T.' connection of the T/R boards to be controlled. The encoder's audio switching/muting relay does not need to be connected since the ProKomm console will automatically mute the console microphone whenever the Model 25 is encoding. The audio switching relay would only be needed if some other audio source is also connected to the console's 'AUX AUDIO' or 'RMT AUDIO'.

If you desire the cross-busys of the console to be monitored by the encoder then the 'CROSSBUSY' of up to four of the console's T/R boards may be connected to the encoder's 'CHAN BUSY' inputs. Keep in mind that each channel busy input is associated with one of the four SEND keys on the front panel. The LED next to the SEND key will illuminate whenever the connected channel is keyed up. When programming the control relays to close when a particular SEND key is pressed, it would probably be desirable to use the relay that controls the channel whose 'CROSSBUSY' is associated with the SEND key. The channel busy impedance jumpers inside the encoder should be removed (high impedance) so that the input impedance will match that of the console.

As the last connection, the encoder's power inputs must be connected to '+12V DC' and 'GROUND' of the console's Power Distribution board. A three pin Molex type connector should be used to mate with the connector, J9, on the Power Distribution board. The subsection 'The Calling Sequence' at the end of the Operation Section of the Model 25 manual explains the relay closure timing used by the encoder.

After the wiring of the interface connections, the Model 25 encoder must be programmed to perform the proper relay closures. The Programming Guide for the Model 25 gives complete details of the programmable parameters. The important parameters are those in the 'send parameter' category and the 'block/format assignment' category. The 'selection mode' parameter must be programmed to the 'direct channel keying' mode. The 'channel busy polarity' parameter of each SEND key should be programmed so that the indicator LED illuminates when the input is grounded. The 'channel busy use' parameter of each SEND key may be programmed so that transmission is inhibited while the input is busy. The 'key relay' parameters of each SEND key and format block need to be programmed to key the desired channel during a transmission. If keying the 'selected channels' is required for any SEND key or format block then be sure that control relay #1 is programmed to close.

METHOD 2: Momentary Channel Select

Via the momentary channel select method, the Model 25 encoder may be made to automatically 'select' the proper channels on the console just prior to transmitting over them. This method will also allow simul-selecting for simultaneous transmission over several channels. After selecting the channels and transmitting over them, the channels will remain selected to allow a voice message to be given to all paged personnel.

The encoder connects to the ProKomm console at three different types of circuit boards; the T/R (transmit/receive) boards of the channels to be controlled, the Auxiliary board, and the Power Distribution board. A description of the important console signals follow.

BOARD	PIN	SIGNAL	DESCRIPTION
T/R Board	(38)	Select SW	This selects this channel when momentarily grounded and de-selects the other channels unless Simul Sel is grounded.
	(66)	Crossbusy	This shows that the channel-is-busy when it is at or near ground.
Auxiliary Board	(70)	RMT Aux Audio	This audio is transmitted over all selected channels when remotely keyed.
	(81)	RMT P.T.T.	This keys all of the selected channels when it is grounded.
	(91)	Simul Sel SW	This allows more than one channel to be selected at a time after being momentarily grounded.
Power Dist. Board	(J9-1)	+12V DC	+12 volt DC power for the Model 25.
	(J9-2)	GROUND	Ground (+12v return) for the Model 25.
	(J9-3)	GROUND	Same as J9-2.

The interface between the Model 25 encoder and the ProKomm console depends on the console controlling features desired. The encoder may either control single-select-only of up to eight channels, or it may control single/simul-select of up to seven channels. Diagrams for both types of interfaces follow:

KUSTOM ProKomm CONSOLE, MOMENTARY CHANNEL SELECT INTERFACE FOR CONTROL OF EIGHT CHANNELS WITHOUT SIMUL-SELECT CAPABILITY.

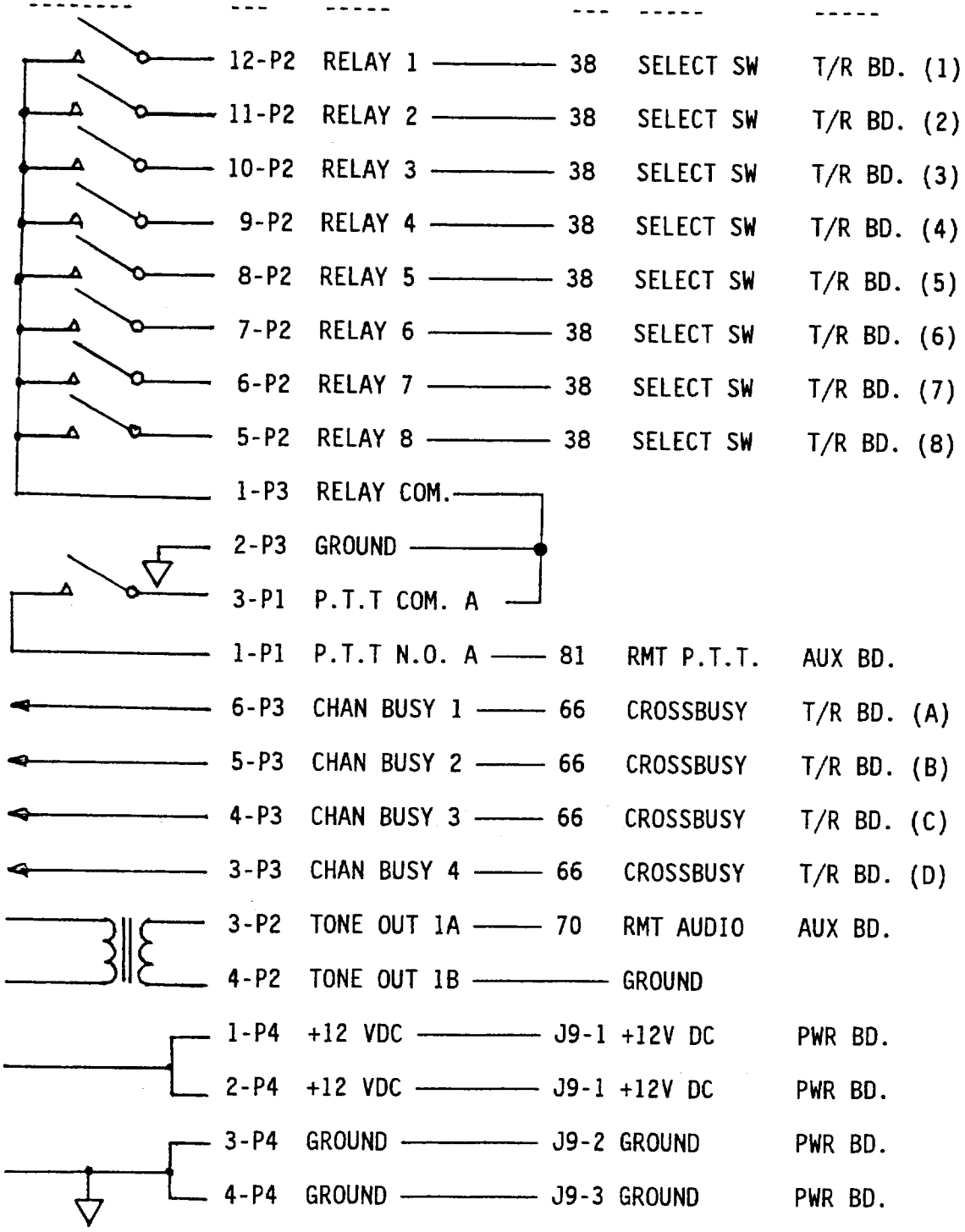

KUSTOM ProKomm CONSOLE, MOMENTARY CHANNEL SELECT INTERFACE FOR CONTROL OF SEVEN CHANNELS WITH SIMUL-SELECT CAPABILITY.

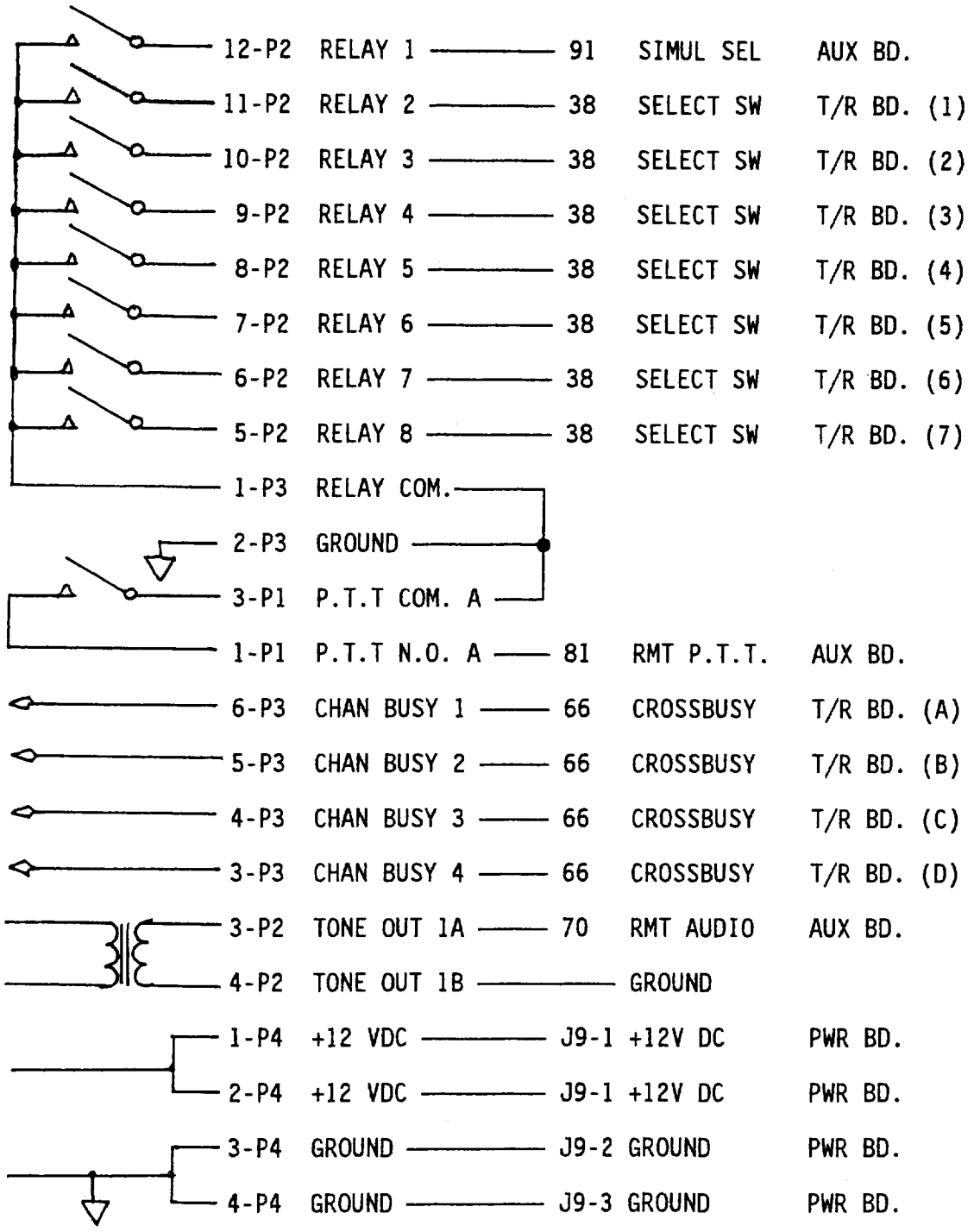

One side of the encoder's 'TONE OUTPUT 1' must be connected to the console's 'RMT AUX AUDIO' input at the Auxiliary board. The other side of the 'TONE OUTPUT 1' should be grounded to the console's signal ground. A shielded wire may be desirable for the audio signal in order to shield against hum and noise. The encoder's 'P.T.T. N.O. A' connection should be connected to the console's 'RMT P.T.T.' at the Auxiliary board. The 'P.T.T. COM. A' should be connected to ground. If simul-selecting is desired, then the encoder's 'RELAY 1' should be connected to the console's 'SIMULTANEOUS SEL SW' at the Auxiliary board. Only control relay #1 should be used for this since it closes for selecting before any other control relay closes. The remaining control relay connections of the encoder should be individually connected to the 'SELECT SW' connection of the T/R boards to be controlled. The encoder's audio switching/muting relay does not need to be connected since the ProKomm console will automatically mute the console microphone whenever the Model 25 is encoding. The audio switching relay would only be needed if some other audio source is also connected to the console's 'RMT AUDIO'.

If you desire the crossbusys of the console to be monitored by the encoder then the 'CROSSBUSY' of up to four of the console's T/R boards may be connected to the encoder's 'CHAN BUSY' inputs. Keep in mind that each channel busy input is associated with one of the four SEND keys on the front panel. The LED next to the SEND key will illuminate whenever the connected channel is keyed up. When programming the control relays to close when a particular SEND key is pressed, it would probably be desirable to use the relay that controls the channel whose 'CROSSBUSY' is associated with the SEND key. The channel busy impedance jumpers inside the encoder should be removed (high impedance) so that the input impedance will match that of the console.

As the last connection, the encoder's power inputs must be connected to '+12V DC' and 'GROUND' of the console's Power Distribution board. A three pin Molex type connector should be used to mate with the connector, J9, on the Power Distribution board. The subsection 'The Calling Sequence' at the end of the Operation Section of this manual explains the relay closure timing used by the encoder.

After the wiring of the interface connections, the Model 25 encoder must be programmed to perform the proper relay closures. The Programming Guide for the Model 25 gives complete details of the programmable parameters. The important parameters are those in the 'send parameter' category and the 'block/format assignment' category. The 'selection mode' parameter must be programmed to the 'momentary channel select' mode. The 'channel busy polarity' parameter of each SEND key should be programmed so that the indicator LED illuminates when the input is grounded. The 'channel busy use' parameter of each SEND key may be programmed so that transmission is inhibited while the input is busy. The 'key relay' parameters of each SEND key and format block need to be programmed to select the desired channel just prior to a transmission. If simul-select is required for any SEND key or format block then be sure that control relay #1 is programmed to close. This will make the decimal number entered during programming an odd number.

Kustom and ProKomm are trademarks of Kustom Electronics Inc.

APPENDIX C - INTERFACING MODEL 25 TO CAD SYSTEMS

The Zetron Model 25 Programmable Encoder is easily controlled by a computer for computer aided dispatch (CAD) applications. The purpose of this application note is to describe the computer-to-encoder interface and communications protocol as well as the electrical specifications of the Model 25's computer port. The features described here are only available on Model 25s equipped with version 1.20 or later software.

COMPUTER-TO-ENCODER INTERFACE

The encoder's interface to the computer is the computer port connector. This nine-pin socket can either be mounted on the front or rear panel as described in the Installation Section of this manual. Complete computer control of the encoder is possible via this connector. Four important RS-232C compatible signals are available at this connector; transmit data (TX-DATA), receive data (RX-DATA), remote control (RMT-CTL) and signal GROUND. Electrical and physical specifications of the computer port connector are at the end of this note.

TX-DATA is the RS-232 output from the encoder which provides information to a computer about call progress. RX-DATA is the RS-232 input to the encoder used by a computer to control the encoder. One second or more of a continuous 'space' level on the RX-DATA signal will cause the encoder to reset thus halting any radio transmissions in progress (a long 'space' level on the RX-DATA signal is commonly known as a 'break'). The RMT-CTL signal is used to alter the encoder's mode of operation. The two operating modes are the instant call mode and remote control mode. A 'mark' level on the RMT-CTL signal configures the encoder in the instant call mode thus enabling the instant call keys but disabling control via computer. When in instant call mode, the RX-DATA signal must not receive any characters from the controlling computer, otherwise an error may occur. A 'space' level on the RMT-CTL signal configures the encoder in the remote control mode thus enabling control via computer but disabling the instant call keys. In either operating mode the encoder's keypad section, on the left side of the front panel, can be active.

While the encoder is idle, the operating mode can be switched by changing the level of the RMT-CTL signal and pausing two seconds for the new operating mode to take effect. A change of level on the RMT-CTL signal will not be noticed by the encoder until it is idle (not transmitting). The idle state can be brought about by resetting the encoder via a 'break' (described above), and pausing for two seconds. Resetting the encoder, however, will cause calls in progress to be terminated and any pending instant calls to be cleared. When the encoder detects a change in the RMT-CTL level, the equivalent of a reset also occurs.

The following diagrams show two suggested interface wiring options. The computer priority option gives the computer full control of mode selection. The operator priority option gives the operator control of the mode selection via a toggle switch.

WIRING DIAGRAM - COMPUTER PRIORITY OPTION

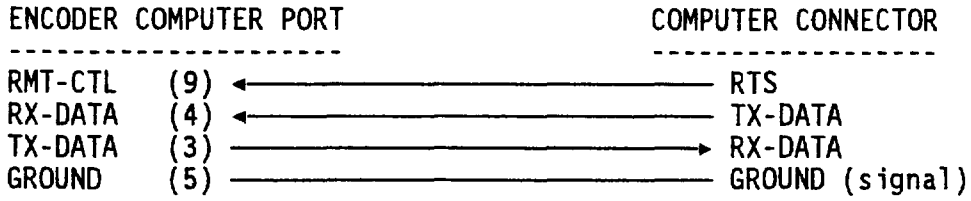

The computer priority option uses only the four main signals of the computer port. The TX-DATA of the encoder feeds the RX-DATA of the computer and vice-versa. The computer may control the RMT-CTL signal (and thus the operating mode) via its RTS (request-to-send) signal or some other computer controllable RS-232 output. Typically, the computer would leave the encoder in the instant call mode (RTS at 'mark' level) when not requiring the encoder. This would allow normal operator control until the computer required it, at which time the computer could take over control by placing the encoder in the remote control mode (RTS at 'space' level). The computer would only return control to the operator when all calls that were computer initiated had completed. This option has the advantage of giving the computer the priority which is important if the computer handles the emergency dispatching and the operator handles normal traffic. This option has a disadvantage because a crash of the computer could disable the encoder until the computer could be disconnected from the encoder.

WIRING DIAGRAM - OPERATOR PRIORITY OPTION

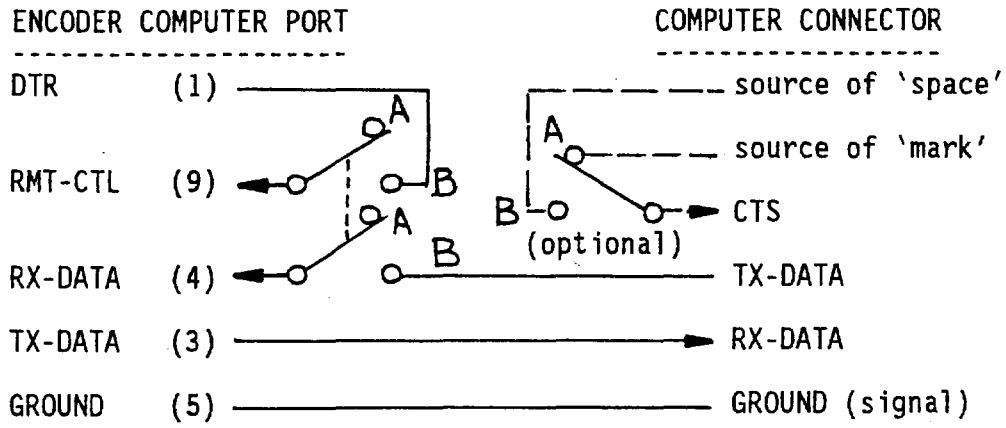

The operator priority option uses a DPDT toggle switch to both control the RMT-CTL signal (and thus the operating mode) and isolate the RX-DATA signal from the computer. The switch could be mounted on the computer port cover so that it is easily accessible by the operator. With the switch in the 'A' position the RMT-CTL and RX-DATA signals are open. The internal RS-232 receivers interpret an open condition the same as a 'mark' level, thus the encoder is in the instant call mode (or operator/local mode). The RX-DATA signal is isolated from the computer to prevent inadvertent data sent via the computer from causing an error. When the switch is in the 'B' position, then the DTR (data-terminal-ready) signal of the encoder, which supplies a continuous 'space' level, is connected to the RMT-CTL signal, thus the encoder is in the remote control mode (or computer/CAD mode). The dotted connection in the diagram shows an extra pole added to the switch. This pole is optional and can be used to indicate to the computer the mode in which the encoder is currently operating so that the computer would only attempt control when the operator has the switch in the remote control position. Normally the computer's CTS (clear-to-send) signal would be used to monitor the state. In the 'A' position the computer would see a 'mark' level on CTS (not clear-to-send/ instant call mode). In the 'B' position the computer would see a 'space' level on CTS (clear-to-send/ remote control mode). Usually the RS-232 connector of a computer supplies a source of 'mark' and 'space' levels needed for the extra optional pole.

With the operator priority option the switch would normally be in the 'remote control' (CAD) position so that the computer can control the encoder. Then when the operator needs control, the switch can be put in the 'instant call' (operator) position so that the operator can use the instant call keys. With this option the CAD computer is the normal dispatcher and the human operator serves as the backup dispatcher in case of emergency or computer crash.

The encoder's operating mode should only be switched when it is idle. If the mode is switched during a calling sequence then there is a good possibility that the stack of calls will not be completed. In addition, if the encoder is not idle when the mode is switched, it may take much longer for the new operating mode to take effect since the mode will not switch until the encoder is again idle. Remember that when the mode is switched while the encoder is idle, the encoder will be unavailable to both the operator and computer for the two seconds it takes to reconfigure its operation. The encoder also requires the same amount of time to configure itself after a reset (either from the RESET button or from a 'break' on the RX-DATA signal). Resetting the encoder will cause any call in progress to terminate, and any instant call keys in the queue will be cleared. Also, if for some reason the computer causes an error to occur while in instant call mode (Err0), then the serial port will be disabled. The port can only be re-enabled by interrupting encoder power or by accessing one of the installation aids for serial port control.

COMMAND PROTOCOL

Once the remote control mode has been active for two seconds or longer, the computer may issue commands to the encoder. While in remote control mode, the controlling device (CAD) has available all features that are available from the encoder's keypad. Normally, however, a CAD system need only make use of the instant call key stacks. Only the command protocol needed for the instant call stacks is described here. The ASCII command sequence for accessing an instant call stack consists of a four character decimal number followed by a CR (carriage return) control character. The four-digit number sent to the encoder must correspond to one of the 206 instant call key stacks. The numbering of the instant call keys is not continuous since the address information includes the panel number, row and column of the key. The number restrictions for the instant call stacks are as follows:

PANEL	NUMBER RANGE
Small panel on encoder	0000 - 0004
	0010 - 0014
	0020 - 0024
	0030 - 0034
	0040 - 0044
	0050 - 0053
Large Auxiliary panel, address 1	0100 - 0158
Large Auxiliary panel, address 2	0200 - 0258
Large Auxiliary panel, address 3	0300 - 0358

Each of the characters sent to the encoder will be echoed if they are valid. Invalid characters will not be echoed. The next character should not be sent to the encoder until the last one has been echoed, otherwise an overrun may occur. If available, an echo time-out should be used by the computer's program in case the character sent is invalid and not echoed. When the encoder receives the CR (carriage return) following the four digits, the encoder will check to see if the number represents a stack that has been programmed. If the instant call stack is not programmed, then the encoder will respond with a NAK (negative acknowledge) control character. If the instant call stack is programmed, then the encoder will start the calling sequence. Each instant call stack may consist of one or more individual calls. The first step performed by the encoder in sending an individual call via radio is to check the appropriate channel busy input signal. While the input indicates that the channel is busy, the encoder will output a BEL (bell) control character. The BEL will be issued approximately once a second while the channel remains busy. If after 30 seconds, the channel is still busy, then the encoder will give up the attempt to transmit the individual call, output an EOT (end-of-transmission) control character, and will go on to the next call in the instant call stack. During the 30-second channel busy delay, the computer can force the encoder to send the call by transmitting a CR (carriage return) via the computer port. When all calls in the instant call stack have been processed, the encoder will respond with an ACK (acknowledge) control character.

After the computer has initiated a calling sequence, it should not send any more characters to the encoder until the encoder has either replied with an ACK or NAK (unless it is to force transmission over a busy channel). Characters sent to the encoder when it is not idle will cause an overrun and unpredictable results may occur. It should be noted that while the encoder is being manually operated, it will output many characters via the TX-DATA signal that will be received by the computer. So a program which is used by the CAD to control the encoder should clear out its serial port receive buffer prior to issuing a calling command to the encoder. Also, while in the remote control mode the encoder's keypad can be active at the same time as the computer port, therefore there is a chance that operator entries from the keypad could inter-mix with CAD commands to the encoder. The asterisk character (*) can be used by the computer to clear any information from the encoder that may have previously been entered via keypad or computer. The encoder will give no character back to the computer in response to the '*', so the computer should wait one second before sending any additional characters.

COMPUTER PORT ELECTRICAL SPECIFICATIONS

RS-232 inputs:	'Mark'	+0.7	to	-15	volts	
(RX-DATA, RMT-CTL)	'Space'	+1.5	to	+15	volts	
RS-232 outputs:	'Mark'	-2.5	to	-4.5	volts	(at 4 mA)
(TX-DATA)	'Space'	+7.0	to	+13	volts	

RMT-CTL (remote control signal):
'Space' remote control operating mode
'Mark' instant call operating mode

RX-DATA (receive data signal):
1 second or more of continuous 'space' causes reset

COMPUTER PORT PHYSICAL SPECIFICATIONS

Connector: DE9-S (socket)

Signals:
Pin 1 - DTR (data-terminal-ready) provides 'space'
Pin 2 - no connection
Pin 3 - TX-DATA (transmit-data) from encoder
Pin 4 - RX-DATA (receive-data) to encoder
Pin 5 - GROUND (signal-ground)
Pin 6 - no connection
Pin 7 - RTS (request-to-send) provides 'space' level
Pin 8 - CTS (clear-to-send) to encoder
Pin 9 - RMT-CTL (remote-control) 'space'=remote control

COMPUTER PORT COMMUNICATIONS PROTOCOL SPECIFICATIONS

Type: Asynchronous ASCII serial, non return to zero (NRZ)

Data bits: Eight (8), most significant bit is zero

Parity: None

Stop bits: One (1)

Duplex: Full duplex when in remote control mode

Baud Rate: 4800, 600 or 150 baud in remote control

ASCII CONTROL CHARACTER USAGE

CR (carriage return) < hex 0D >	From computer to encoder. Starts encoder's calling sequence when preceded by four valid ASCII decimal characters OR used to cause encoder to force transmission over a busy channel.
NAK (negative ack) < hex 15 >	From encoder to computer. Signifies that the attempted calling sequence cannot be sent because the instant call stack has not been programmed. When encoder sends NAK it is again idle and can accept the next calling instruction from the computer.
BEL (bell) < hex 07 >	From encoder to computer. Signifies that the channel of the individual call is busy. BEL will be sent every second until channel becomes clear or until 30 seconds elapse after which time EOT will be sent.
EOT (end of trans) < hex 04 >	From encoder to computer. Signifies that the attempted individual call timed out on a channel busy condition.
ACK (acknowledge) < hex 06 >	From encoder to computer. Signifies that the attempted instant call stack has completed its calling sequence. This does not mean that each call was sent; some could have busied out. When encoder sends ACK it is again idle and can accept the next calling instruction from the computer.
* (asterisk) < hex 2A >	From computer to encoder. This clears any previous information entered either from keypad or computer. This will not interrupt an instant call stack already in progress. The encoder will not respond back to the computer to indicate completion of the clearing. The clearing may take up to one second during which time encoder will not accept another character.

SUGGESTED REMOTE CONTROL PARAMETER PROGRAMMING

Baud rate:	4800 baud provides the fastest response.
New-line nulls:	Zero (0) nulls per new line gives fastest response
Bell use:	Output without bell characters will speed response
CTS monitor:	The encoder's CTS should be ignored.
CTS polarity:	Since CTS is ignored, either polarity can be used.
Call logging:	The descriptions in this brief only hold true if call logging has been disabled. If enabled, the CAD program will have much more encoder-generated text to search through.

APPENDIX D - INSTANT CALL LABELS
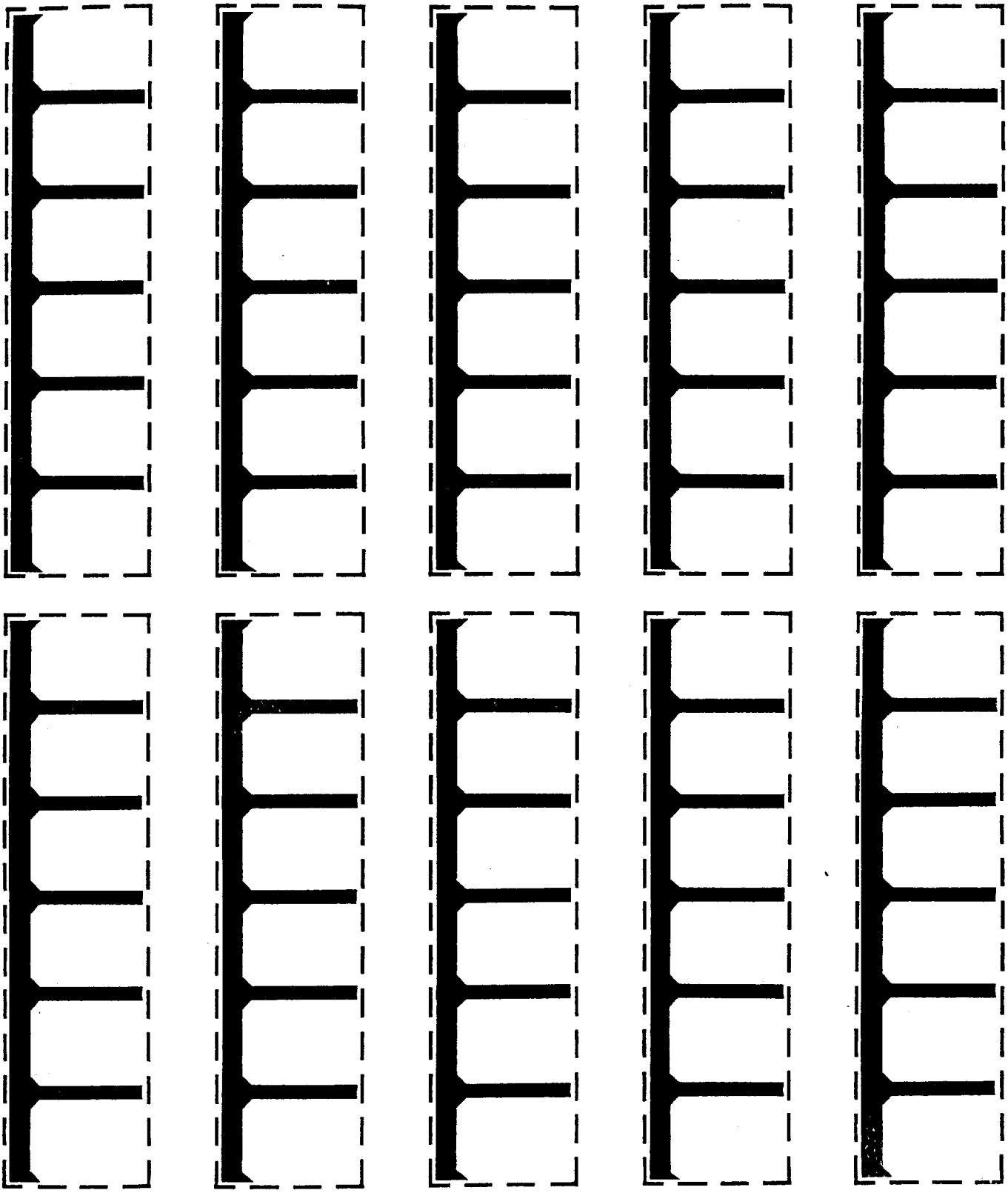
Use this sheet as labels for your instant call panel. The labels may be printed using a typewriter. Remove the labels from the sheet by cutting inside of the dotted line. If desired, the labels may be color-coded by using colored highlighter pens.