FRONT PANEL DISPLAY BOARD (A15)

MODEL RTL4101A
SCHEMATIC DIAGRAM, CIRCUIT BOARD DETAIL,
AND PARTS LIST

DETAILS:

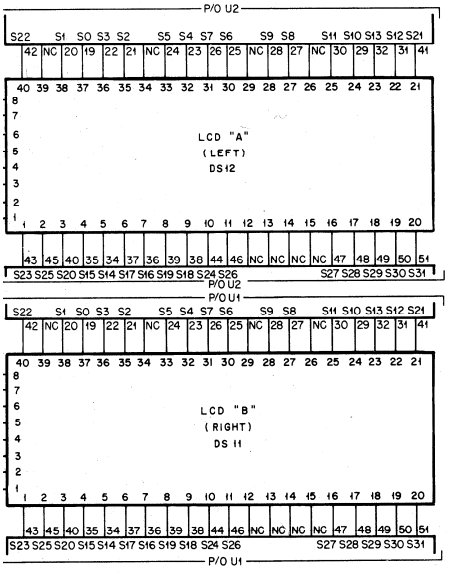

NOTES:

1. Unless otherwise indicated, resistor values are in ohms, capacitor values are in microfarads, and inductor values are in millihenries.
2. IC types are TTL and CMOS devices.
3. Connections for integrated circuits on this board are as follows:

Reference Designation	Mfgr's Description	+12 V	VCC	Gnd
U1	Display Driver			6
U2	Display Driver			6
U3	Quad Comparator	3		12
U4	Quad Open Collector NAND		14	7
U5	Quad Op Amp	4		11
U6	1 of 10 Decoder		16	8

4. The LCD display interconnect wiring is shown in the detailed section on this drawing.
5. JU2 is not presently used. It is shown on the drawing for information only.
6. C5 and R4 are shown for information only. They are not used.

FRONT PANEL DISPLAY BOARD

Motorola No. ***PEPS-36858-O***
(Sheet 2 of 2)
8/12/83-PHI

MOTOROLA INC.
Communications
Sector

BATTERY PACK (A16)

MODEL RTP4021A

1. BATTERY PACK INSTALLATION

The following instructions detail the correct procedure for battery pack (RTP4021A) installation. See Figure 1.

Step 1. Remove and discard 4 nuts holding the battery retaining bars to the battery case. Remove the retaining bars and batteries from the case.

Step 2. Extract the Red and Black battery leads from the battery compartment.

Step 3. Place the battery case in the battery compartment. Screw in the center screws and attach the retaining bars with the 4 screws removed in Step 1. The battery case should now be attached with 6 screws.

Step 4. Connect the Red lead to the + terminal, the Black lead to the − terminal on one end and jumper from + to − on the other end of the batteries which places the batteries in series.

NOTE

EXT DC/BATTERY switch must be in the BATTERY position for battery operation.

2. BATTERY CHARGING

The following instructions detail the correct procedure for battery charging.

NOTE

Prolonged discharge of the battery can cause permanent damage to the battery. By law, new batteries must be shipped discharged.

Step 1. Connect the service monitor to an ac power source and select BATTERY on the rear panel. Turn the service monitor to ON. The service monitor charges in either the BATTERY **or** EXT DC positions.

Step 2. Read the battery voltage by selecting BATT on the right LCD. A fully charged battery reads 13.7 volts.

A newly installed battery will charge overnight. Overnight charging of the battery can be accomplished by leaving the service monitor in ON or STANDBY.

NOTE

If ac power is connected to the service monitor, ac power is used automatically rather than dc power.

parts list

RTP4021A Battery Pack — PL-8642-O

REFERENCE SYMBOL	MOTOROLA PART NO.	DESCRIPTION
		mechanical parts
	1-80350A37	CABLE & CONNECTOR
	2-7019	NUT: 4-40 × 4 × 3/32", hex steel; 6 used
	3-138804	SCREW, machine; 4-40 × 5/16" Phillips; hex
	4-80395A88	WASHER, nylon; 4 used
	7-80377A37	BRACKET; mounting
	32-80390A79	GASKET; mounting; 4 used
	42-80377A38	CLAMP; 2 used
	60-80395A50	BATTERY; 6 V, 8 AH; 2 used 6501BB

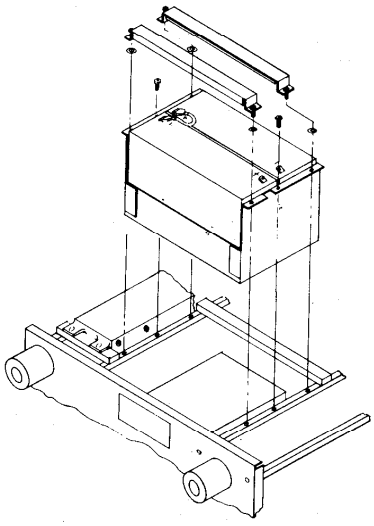

Figure 1. Battery Installation

BATTERY PACK

parts list

RTX1008A Basic Chassis — PL-8500-O

REFERENCE SYMBOL	MOTOROLA PART NO.	DESCRIPTION
		motor:
B1	59-80378A94	fan
		capacitor, fixed:
C1 thru 7	21-83596E13	.001 uF ± 10%; 500 V
		light emitting diode:
DS1	48-05776C01	red
		coil:
E1 thru 7	76-83960B01	ferrite, core
E8, 9	76-80397A74	ferrite bead
		fuse:
F1	65-42092	2 amp; 250 V
F2	65-80397A22	8 amp; 32 V
		filter:
FL1	91-80390A52	line
		connector, receptacle:
J1 thru 5	9-855268	female; single contact (BNC)
J6	9-830418	female; 4-contact
J6	15-10811A07	housing, plug; 4-contact
J7	9-80378A51	female; single contact (BNC)
		coil, rf:
L1 thru 7	24-82549D41	choke; 100 mH
		connector, plug:
P1	15-80378A57	housing, 60-contact
P2	15-80390A10	housing, 9-contact
P3	28-80390A05	male; 3-contact A.C.
		resistor:
R1	18-80378A30	variable: 5k; includes S3
R2	18-80378A29	variable; 5k
R3, 4	18-80378A21	variable; 100k
R5		part of S4
R6, 7	18-80378A22	variable; 2k
R8		part of S5
R9	18-80378A30	variable: 5k; includes S6
R10		part of S9
		varistor:
R11	6-80395A72	1200 amp, 430 V @ 25°C
		switch:
S1	40-80378A10	spst, toggle
S2	40-80378A27	rotary: 5 position
S3		part of R1
S4	40-80397A32	1 pole; 4 position
S5	40-80378A24	rotary: 1 pole; 4 position
S6		part of R9
S7, 8	40-80378A35	spdt
S9	40-80397A30	1 pole; 3 position
S10	40-80397A33	rotary: 1 pole; 3 position
S11	40-80378A35	single pole triple throw
S12	40-80395A84	dpdt
S13	40--80390A50	rocker

ref. no.		mechanical parts
1	36-80337A83	KNOB; 8 used
2	36-80397A63	KNOB
3	36-80337A86	KNOB; 4 used
4	36-80337A87	KNOB (BLK and BLU)
5	36-80337A85	KNOB (BLK); 2 used
	2-115123	NUT, 10-32 × 3/8 × 1/8"; 2 used
	2-131435	NUT, 4-40 × 1/4 × 3/32"; 3 used
	3-136782	SCREW, machine: 2-56 × 3/16"; 2 used
	3-138804	SCREW, machine: 4-40 × 5/16"; 36 used
	3-138929	SCREW, machine: 4-40 × 5/8"; 14 used
	3-139579	SCREW, machine: 4-40 × 5/16"; 14 used
	3-140207	SCREW, machine: 4-40 × 5/16"; 8 used
	3-80335A97	SCREW, machine: BLK; 6-32 × 0.312"; 7 used
	43-80312B10	SPACER BEAM; 2 used
	43-80397A41	STANDOFF; hex 1/4"; 8 used
	4-8406	LOCKWASHER, #2 internal; 2 used
	4-140208	LOCKWAHER, #4 split; 8 used
	4-140209	LOCKWASHER, #6 split; 7 used
	7-80390A17	BRACKET, card guide; 2 used
	2-84201D82	NUT; 2 used
	3-139013	SCREW, machine; 4-40 × 3/16; Phillips; 8 used
	4-8434	LOCKWASHER; #4 int.; 4 used
	26-80312B13	SHIELD; 4 used
	26-80397A70	SHIELD
	26-80397A78	SHIELD
	26-80397A67	SHIELD
	26-80397A69	SHIELD
	46-80377A49	GUIDE, card; 2 used
	46-80395A24	GUIDE, card (ORG); 2 used
	46-80395A25	GUIDE, card (YEL); 2 used
	46-80395A26	GUIDE, card (BLU); 2 used
	46-80395A27	GUIDE, card (RED); 2 used
	46-80395A28	GUIDE, card (BRN); 2 used
	46-80395A29	GUIDE, card (GRN); 2 used
	46-80395A30	GUIDE, card (VIO); 2 used
	47-80377A11	BEAM, main
	47-80377A12	BEAM, main

REFERENCE SYMBOL	MOTOROLA PART NO.	DESCRIPTION
	47-80377A13	BEAM, main
	47-80377A14	BEAM, main
	47-80377A15	BEAM, main
	47-80377A16	BEAM, main
	47-80377A17	BEAM, cross
	47-80377A18	BEAM, cross
	47-80377A19	BEAM, cross
	47-80377A20	BEAM, center
	47-80377A21	BEAM, support
	47-80378A63	BEAM, center
	55-80378A53	HANDLE
	55-80390A29	STRIKE; 2 used
	55-80395A05	HINGE; 2 used
	64-80377A28	BEZEL
	26-80397A70	SHIELD
	5-80395A54	GROMMET
	15-80377A34	HOUSING, power supply
	46-80377A40	GUIDE, card; 2 used
	64-80377A23	PLATE, base
	1-80350A06	ASSEMBLY FRONT PANEL includes: refer J1 thru 6, R1, 2, 3, 4, 9, L1, 2, 3, S1, 2, 4, 9, 10, 11, 12, P1
	1-80350A21	ASSEMBLY CABLE w/CONNECTOR includes P1
	30-848407	CABLE, 2 conductor shielded; 9-1/2" used
	30-859004	CABLE, coaxial RG188/U
	39-80378A68	CONTACT, crimp; 54 used
	1-80350A39	ASSEMBLY FILTER BOARD includes: refer C4, 5, 6, 7 and L4, 5, 6, 7, & E4, 5, 6, 7
	4-7699	LOCKWASHER #13/16" internal
	4-115021	LOCKWASHER #1/4" internal; 6 used
	4-125904	LOCKWASHER: 0.375 × 0.625 × .030; 7 used
	4-80395A94	WASHER, dress; 3 used
	4-80397A42	WASHER, retainer
	7-80378A50	BRACKET, LED mounting
	13-80390A41	BEZEL; 2 used
	13-80390A42	BEZEL
	14-80312B01	INSULATOR, shield; 1/2 × 3/4
	26-80397A60	SHIELD, connector
	26-80397A65	SHIELD
	29-10261A05	LUG, soldering; 3 used
	30-83794C01	CABLE, coaxial; 6" used
	35-80390A46	SCREEN, scope w/graticule
	64-80377A50	PANEL, front
	64-80377A51	PANEL, front
	1-80350A12	ASSEMBLY REAR PANEL includes: B1, F1, F2, E8, E9, FL1, P1 and P3
	2-115123	NUT, 10-32 × 3/8 × 1/8"; 4 used
	2-131435	NUT, 4-40 × 1/4 × 3/32"; 3 used
	2-132616	NUT, 6-32 × 1/4 × 3/32 × 1/8"; 4 used
	3-138810	SCREW, machine: 4-40 × 5/8"
	3-490642	SCREW, machine: 10-32 × 1-1/2"; 4 used
	3-80312B02	SCREW, machine: 4-40 × 1-1/8"; 4 used
	3-80335A97	SCREW (BLK): 6-32 × 0.312; 4 used
	3-80395A09	SCREW, Phillips pan: 4-40 × 0.375; 5 used
	4-7607	WASHER, flat: 0.125 × 0.281 × .027
	4-140208	LOCKWASHER, #4 split; 10 used
	4-140209	LOCKWASHER, #6 split; 4 used
	9-82083C02	RECEPTACLE, fuse
	13-80390A35	GRILLE
	14-80395A81	INSULATOR
	14-80397A73	INSULATOR
	26-80397A68	SHIELD
	29-5248	LUG, soldering; 2 used
	29-80395A60	CONTACT, insulator; 2 used
	30-80395A86	CABLE, 9 conductor
	35-80397A71	SCREEN, fan
	38-80395A08	CAP, sealing connector
	39-10184A24	CONTACT, receptacle; 2 used
	39-10184A91	CONTACT, receptacle; 3 used
	39-80395A83	TERMINAL, socket; 6 used
	39-80397A64	CONTACT; 2 used
	42-82143C01	CLAMP, cable
	43-80390A34	SPACER; 4 used
	64-80377A22	PANEL, back
	75-80378A91	FEET, rubber; 4 used

RTL4125A H

REFERE SYMB
BT1

15-80312 B6

R2200A Servi

REFERE SYMB
J1

RTL4125A Hardware Kit — PL-8478-O

REFERENCE SYMBOL	MOTOROLA PART NO.	DESCRIPTION
		battery:
BT1	60-83294N03	3 V; lithium
		non-referenced items
	3-138804	SCREW, machine; 4-40 × 5/16"; 21 used
	3-139581	SCREW, machine; 4-40 × 5/16"; 2 used
	3-140207	SCREW, machine; 4-40 × 5/16"; 21 used
	3-80335A97	SCREW, black; 6-32 × 0.312"; 3 used
	4-1714	WASHER, flat; 0.250 × 0.562 × .054
	4-7607	WASHER, flat; 0.125 × 0.281 × .027; 2 used
	4-135739	WASHER, flat: 0.128 × 0.800 × .021
	4-140208	WASHER, lock #4 split; 21 used
	4-140209	WASHER, lock #6 split; 3 used
	4-80395A88	WASHER, nylon; 2 used
	7-80390A16	BRACKET, clip
	15-80377A24	COVER, top
	30-80397A62	CORD, line AC
	32-80390A18	GASKET
	33-80310A66	TAG, serial
	36-80337A83	KNOB; 3 used
	36-80397A63	KNOB
	41-80397A46	SPRING
	41-80397A47	SPRING
	41-80397A48	SPRING
	42-80313A70	TIE WRAP 4"
	54-80338A82	CARD, warranty
	54-80397A77	LABEL
	54-83581L01	LABEL, line cord
	58-84300A98	ADAPTER, male "N"

15-80312 B69

R2200A Service Monitor — PL-8476-O

REFERENCE SYMBOL	MOTOROLA PART NO.	DESCRIPTION
		connector:
J1	28-82365D02	male, single contact (phono)
		mechanical parts
	1-80307A71	ASSEMBLY IC, interconnect; 6.0"
	1-80307A73	ASSEMBLY IC, interconnect; 2.5"
	1-80350A26	ASSEMBLY CABLE & CONNECTOR includes: J1
	30-83794C01	CABLE, coaxial; 20"
	1-80350A27	ASSEMBLY BOTTOM COVER includes:
	4-114970	WASHER, flat; 0.125 × 0.250 × .020; 6 used
	15-80377A25	COVER, bottom
	55-80334A52	BAIL, self-lock
	75-82566B01	BUMPER, rubber; 2 used
	1-80350A30	ASSEMBLY CABLE & CONNECTOR, includes: J1
	1-80356A08	ASSEMBLY CABLE, coaxial
	1-80350A31	ASSEMBLY CABLE & CONNECTOR, includes: J1
	30-859004	CABLE, coaxial RG188U; 18" used

RPX4249A Fuse Kit — PL-8481-O

REFERENCE SYMBOL	MOTOROLA PART NO.	DESCRIPTION
		fuse:
F1	65-80377A61	0.1 amp; 125 V
F2	65-80347A22	8 amp; 32 V
F3	65-42092	2 amp; 250 V

Front Cover
15-80312B46

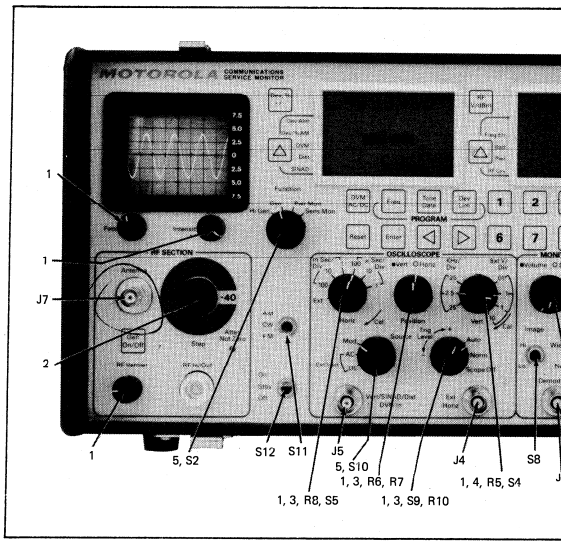

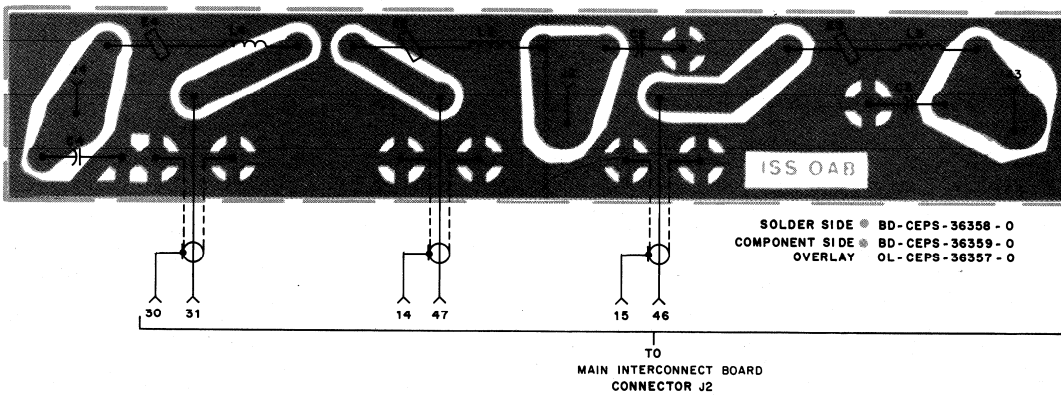

SHOWN FROM COMPONENT SIDE

RTL4125A Hardware Kit — PL-8478-O

REFERENCE SYMBOL	MOTOROLA PART NO.	DESCRIPTION
		battery:
BT1	60-83294N03	3 V; lithium
		non-referenced items
	3-138804	SCREW, machine; 4-40 × 5/16"; 21 used
	3-139581	SCREW, machine; 4-40 × 5/16"; 2 used
	3-140207	SCREW, machine; 4-40 × 5/16"; 21 used
	3-80335A97	SCREW, black; 6-32 × 0.312"; 3 used
	4-1714	WASHER, flat; 0.250 × 0.562 × .054
	4-7607	WASHER, flat; 0.125 × 0.281 × .027; 2 used
	4-135739	WASHER, flat: 0.128 × 0.800 × .021
	4-140208	WASHER, lock #4 split; 21 used
	4-140209	WASHER, lock #6 split; 3 used
	4-80395A88	WASHER, nylon; 2 used
	7-80390A16	BRACKET, clip
	15-80377A24	COVER, top
	30-80397A62	CORD, line AC
	32-80390A18	GASKET
	33-80310A66	TAG, serial
	36-80337A83	KNOB; 3 used
	36-80397A63	KNOB
	41-80397A46	SPRING
	41-80397A47	SPRING
	41-80397A48	SPRING
	42-80313A70	TIE WRAP 4"
	54-80338A82	CARD, warranty
	54-80397A77	LABEL
	54-83581L01	LABEL, line cord
	58-84300A98	ADAPTER, male "N"

15-80312 B69

R2200A Service Monitor — PL-8476-O

REFERENCE SYMBOL	MOTOROLA PART NO.	DESCRIPTION
		connector:
J1	28-82365D02	male, single contact (phono)
		mechanical parts
	1-80307A71	ASSEMBLY IC, interconnect; 6.0"
	1-80307A73	ASSEMBLY IC, interconnect; 2.5"
	1-80350A26	ASSEMBLY CABLE & CONNECTOR includes: J1
	30-83794C01	CABLE, coaxial; 20"
	1-80350A27	ASSEMBLY BOTTOM COVER includes:
	4-114970	WASHER, flat; 0.125 × 0.250 × .020; 6 used
	15-80377A25	COVER, bottom
	55-80334A52	BAIL, self-lock
	75-82566B01	BUMPER, rubber; 2 used
	1-80350A30	ASSEMBLY CABLE & CONNECTOR, includes: J1
	1-80356A08	ASSEMBLY CABLE, coaxial
	1-80350A31	ASSEMBLY CABLE & CONNECTOR, includes: J1
	30-859004	CABLE, coaxial RG188U; 18" used

RPX4249A Fuse Kit — PL-8481-O

REFERENCE SYMBOL	MOTOROLA PART NO.	DESCRIPTION
		fuse:
F1	65-80377A61	0.1 amp; 125 V
F2	65-80347A22	8 amp; 32 V
F3	65-42092	2 amp; 250 V

Front Cover
15-80312B46

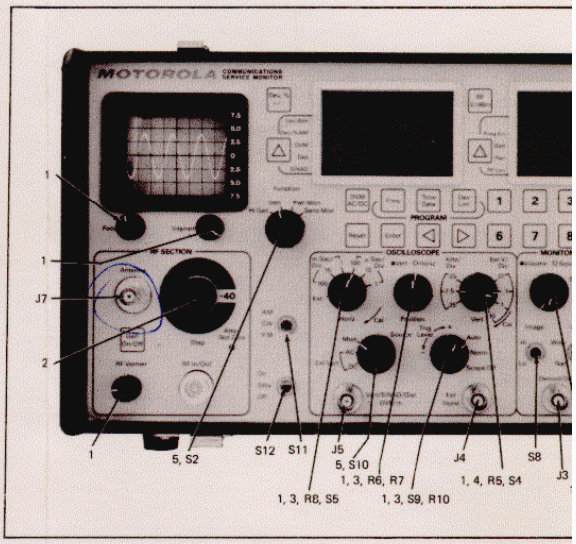

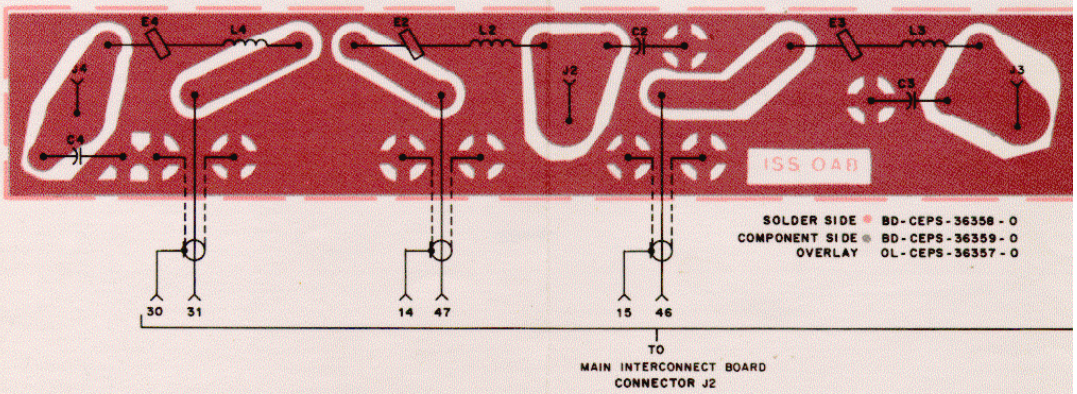

SHOWN FROM COMPONENT SIDE

RPX4249A Fuse Kit PL-8481-O

REFERENCE SYMBOL	MOTOROLA PART NO.	DESCRIPTION
		fuse:
F1	65-80377A61	0.1 amp; 125 V
F2	65-80347A22	8 amp; 32 V
F3	65-42092	2 amp; 250 V

front Cover
15-80312B46

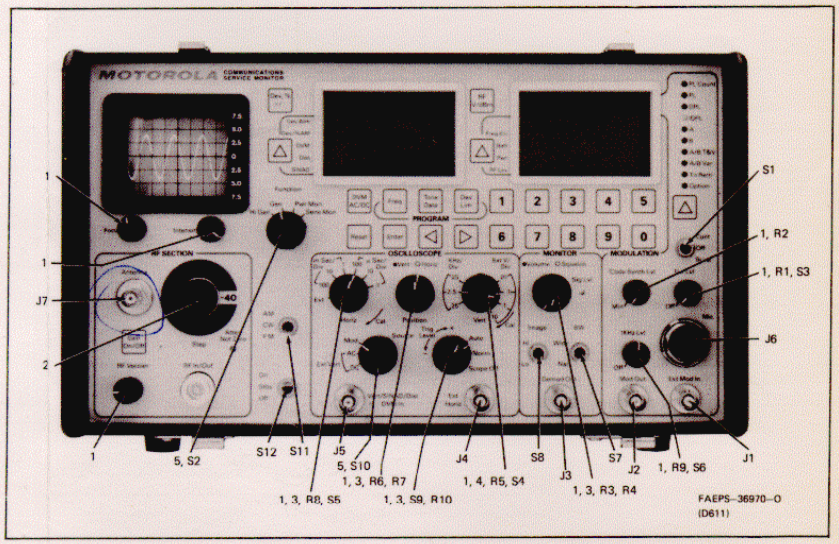

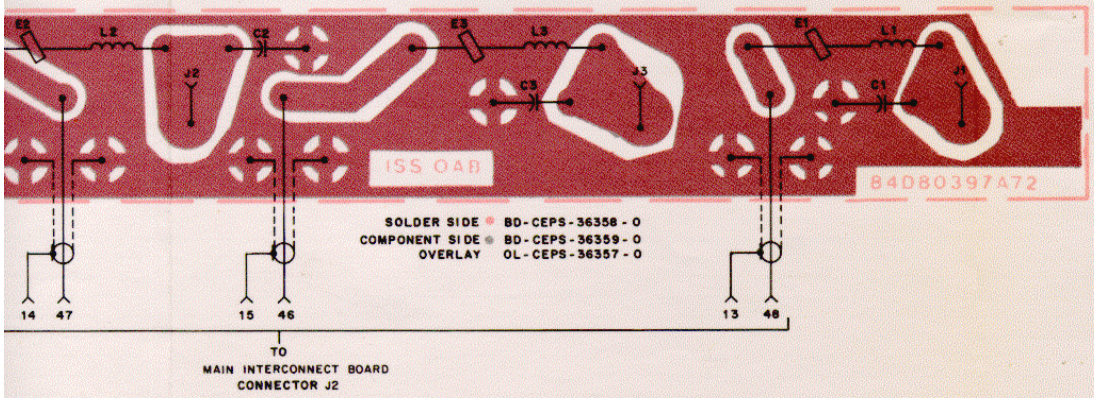

SHOWN FROM COMPONENT SIDE

CHASSIS MECHANICAL LESS REAR PANEL AND MAIN INTERCONNECT BOARD (A17)

MODEL RTX1008A
SCHEMATIC DIAGRAM, CIRCUIT BOARD DETAIL, AND PARTS LIST

FUNCTION

The Chassis Mechanical section includes parts lists for the mechanical and electrical parts that mount on the chassis. Also included is a filter board that mounts to the chassis. The chassis main interconnect board is covered in a separate instruction section, 68P81064E69, in this manual.

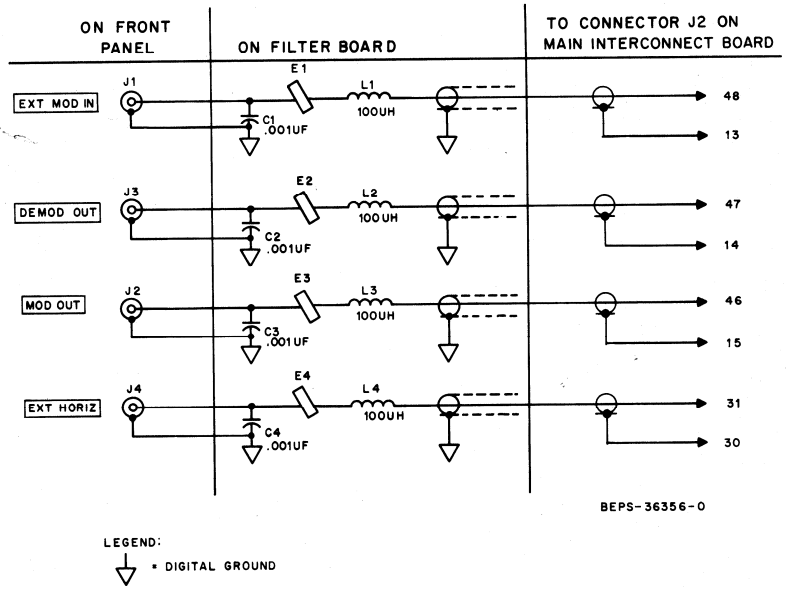

LEGEND:
= DIGITAL GROUND

CHASSIS MECHANICAL

MAIN INTERCONNECT BOARD (A18)

MODEL RTL4099A
SCHEMATIC DIAGRAM, CIRCUIT BOARD DETAIL,
AND PARTS LIST

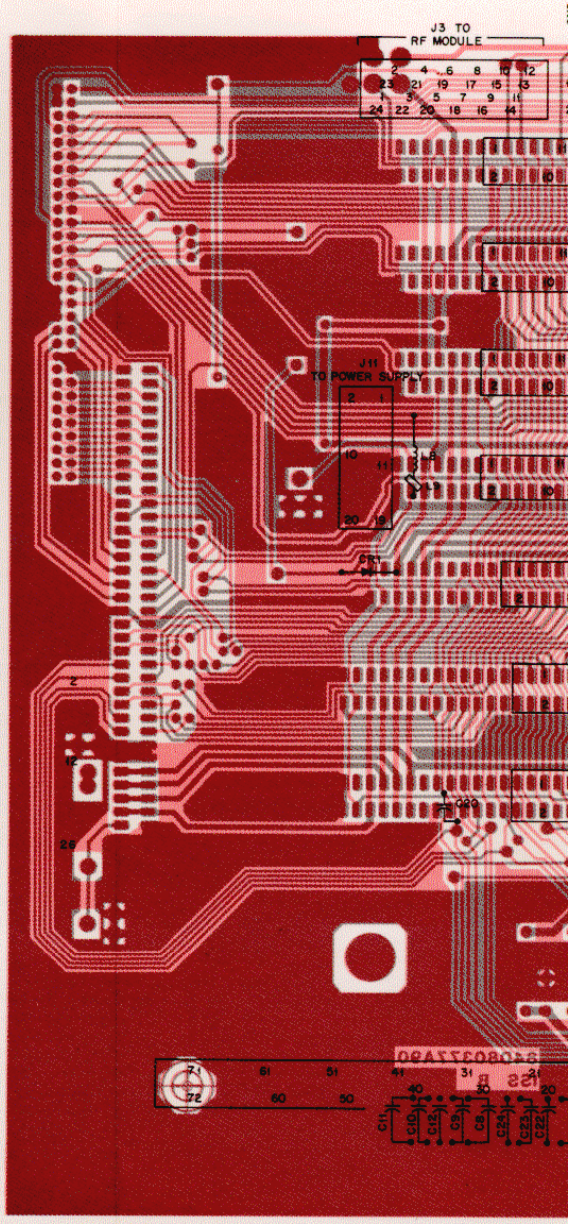

68P81064E69-O
(Sheet 1 of 2)
8/12/83-PHI

(REVERSED)
(REVERSED) CO

SHOWN
(CAPACIT

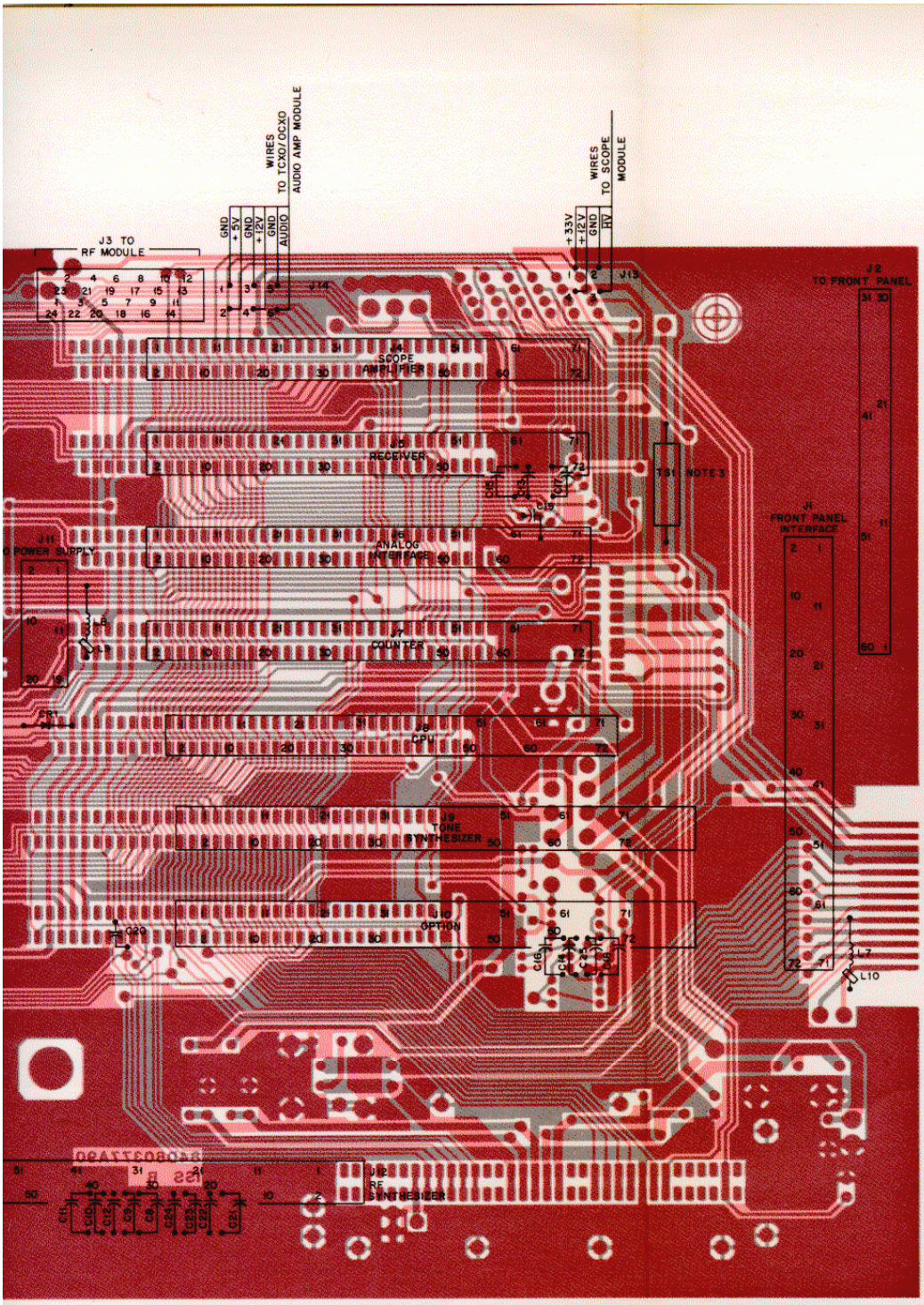

NOTES:

1. CONNECTOR DETAILS ARE SHOWN ON INTERCONNECT BOARD SCHEMATIC DIAGRAM
2. CAPACITORS ARE CHIP COMP
3. TS1 IS A THERMAL SWITCH.

(REVERSED) SOLDER SIDE ● BD-DEPS-36452-0
(REVERSED) COMPONENT SIDE ● BD-DEPS-36453-0
OL-EEPS-36454-0

SHOWN FROM SOLDER SIDE
(CAPACITORS ARE CHIP COMPONENTS)

NOTES:

1. CONNECTOR DETAILS ARE SHOWN ON INTERCONNECT BOARD SCHEMATIC DIAGRAM.
2. CAPACITORS ARE CHIP COMPONENTS.
3. TS1 IS A THERMAL SWITCH.

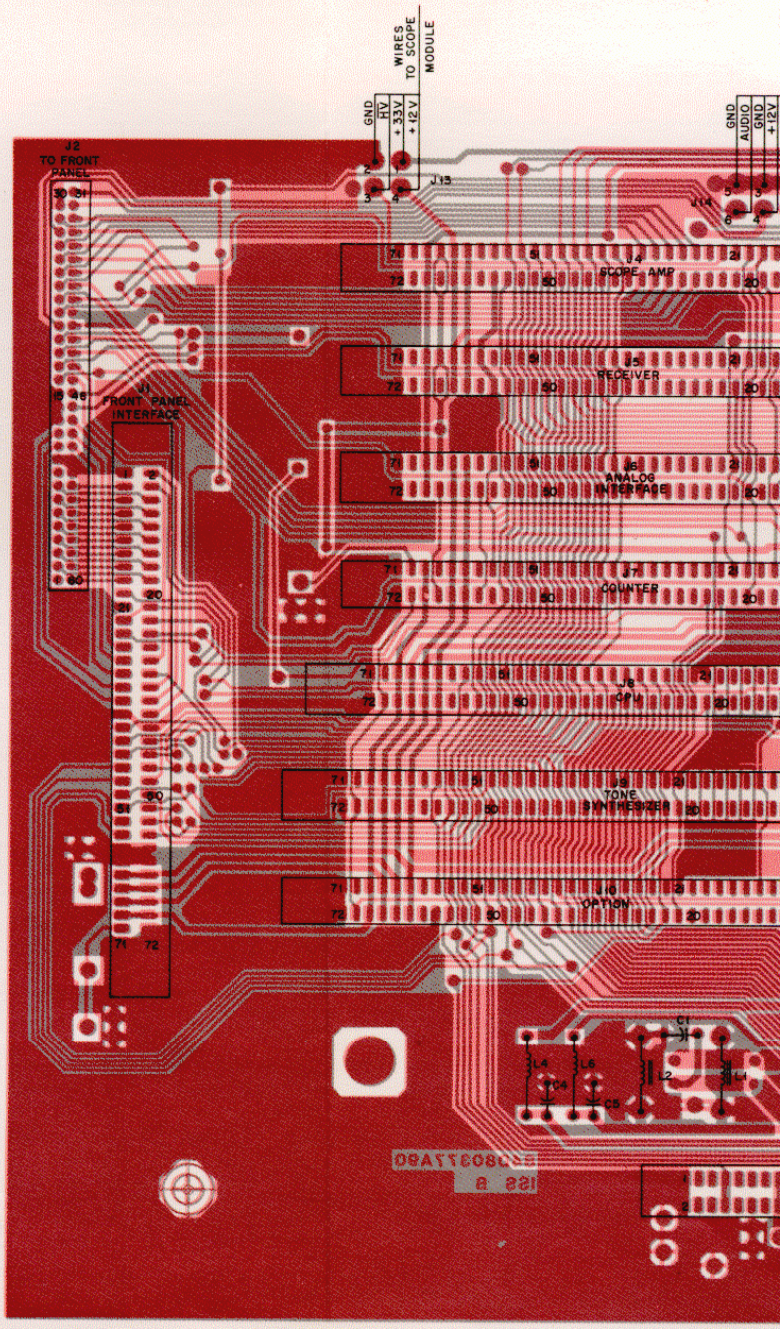

SOLDER SIDE ● BD-DEPS-36
COMPONENT SIDE ● BD-DEPS-36
OL-EEPS-36

SHOWN FROM COMPONE

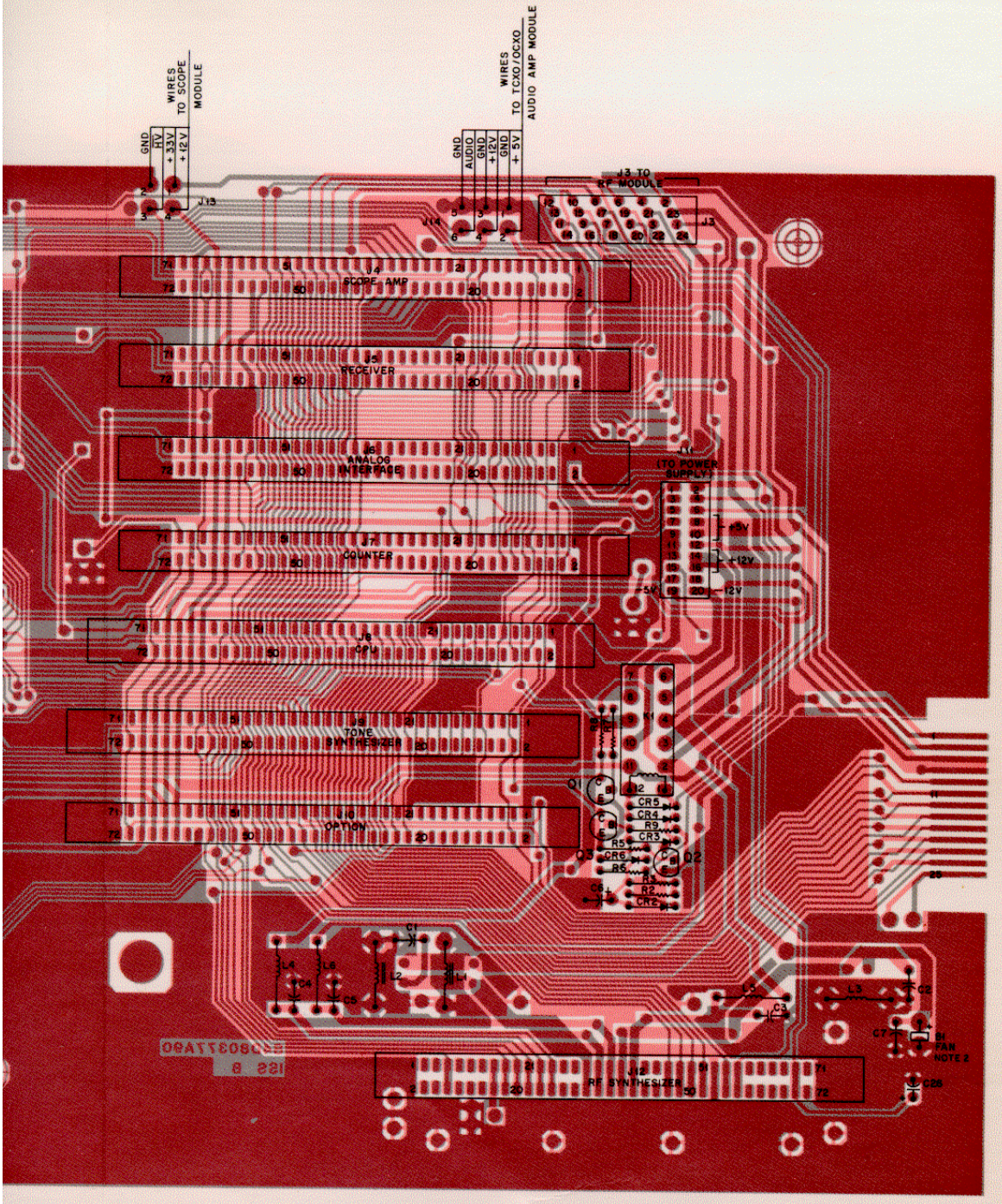

SOLDER SIDE • BD-DEPS-36452-0
COMPONENT SIDE • BD-DEPS-36453-0
OL-EEPS-36451-0

SHOWN FROM COMPONENT SIDE

parts list

RTL4099A Main Interconnect Board — PL-8472-O

REFERENCE SYMBOL	MOTOROLA PART NO.	DESCRIPTION
		capacitor, fixed:
C1 thru 4	21-82372C07	.05 + 80-20%; 25 V
C5	21-82428B21	.01 uF + 10-30%; 100 V
C6	23-84665F14	220 uF + 150-10%; 16 V
C7	21-82428B21	.01 uF + 10-30%; 100 V
C8 thru 20	21-80376A25	.001 uF ± 10%; 50 V (chip)
C21, 22, 23, 24	21-80376A14	220 pF ± 2%; 50 V (chip)
C25	21-80376A25	.001 uF ± 10%; 50 V (chip)
C26	23-84665F02	15 uF + 100-10%; 25 V
		diode: (see note)
CR1	48-83654H02	silicon
CR2	48-83654H01	silicon
CR3	48-83654H02	silicon
CR4, 5	48-82466H01	silicon
		connector, receptacle:
J1	9-80377A45	female; 72-contact (edge connector)
J2	9-80378A59	female; 60-contact
J3	30-80390A13	cable, 24-conductor; includes P302
J4 thru 10	9-80377A45	female; 72-contact (edge connector)
J11	1-80350A24	cable, 20 conductor includes P3
J12	9-80377A45	female; 72-contact (edge connector)
J13	1-80350A22	cable, 4 conductor includes P2
J14	1-80350A23	cable, 6 conductor includes P14
		relay:
K1	80-80378A31	4 pole, single throw; 720 ohms
		coil, rf:
L1, 2, 3	25-83127G01	choke: 1 mH
L4, 5, 6	24-82549D41	choke: 100 uH
L7, 8	24-83451F01	choke: 15 uH
L9, 10	76-83960B01	ferrite bead
		transistor: (see note)
Q1	48-869570	NPN; type M9570
Q2	48-869648	NPN; type M9648
Q3	48-869706	Darlington; M9706
		resistor, fixed: ± 5%; 1/4 W: unless otherwise stated
R1		NOT USED
R2	6-124A01	10
R3	6-124A73	10k
R5, 6	6-124A89	47k
R7	6-124A73	10k
R8	6-124A65	4.7k
R9	6-124A89	47k
		switch:
TS1	80-80397A26	spst, temperature dependent
		voltage regulator: (see note)
VR1	48-82256C15	Zener type; 5.1 V
		mechanical parts
	42-80313A70	TIE WRAP: 4"; 5 used
	30-83794C01	CABLE, coaxial; WHT

note: For optimum performance, diodes, transistors, and integrated circuits must be ordered by Motorola part numbers.

NOTE:

1. CONNECTOR DETAILS ARE SHOWN ON INTERCONNECT BOARD SCHEMATIC DIAGRAM.
2. FAN B1 IS MOUNTED ON REAR PANEL.

TRANSISTOR DETAILS:

Q1, Q2

Q3

CONNECTOR DETAILS

PIN NUMBER	J9 A12 TONE SYNTHESIZER	J10 A09 OPTION	J8 A08 CPU
1	GND	GND	GND
2	GND	GND	LC BUSY
3	—	—	340 kHz
4	OPT. PRES.	OPT. PRES.	OPT. PRES.
5	—	—	—
6	—	—	AD INT
7	—	—	—
8	—	—	COUNT INT
9	REC. AUD.	REC. AUD.	REC. AUD.
10	—	—	—
11	—	—	—
12	—	—	—
13	—	—	—
14	—	—	—
15	—	—	—
16	—	—	—
17	—	—	—
18	—	—	—
19	—	—	BAT 1
20	—	—	—
21	GND	GND	GND
22	AF OUT	AF OUT	AF OUT
23	GND	GND	GND
24	1 kHz	1 kHz	1 kHz
25	TN SYNTH OUT	TN SYNTH OUT	TN SYNTH OUT
26	MOD	MOD	MOD
27	SQ OPN	SQ OPN	SQ OPN
28	NOPINT	NOPINT	NOPINT
29	NTSRQ	NTSRQ	NTSRQ
30	PCTL	PCTL	PCTL
31	I/O 7	I/O 7	I/O 7
32	PFLG	PFLG	PFLG
33	I/O 5	I/O 5	I/O 5
34	I/O 6	I/O 6	I/O 6
35	I/O 3	I/O 3	I/O 3
36	I/O 4	I/O 4	I/O 4
37	I/O 1	I/O 1	I/O 1
38	I/O 2	I/O 2	I/O 2
39	P.O.R.	P.O.R.	P.O.R.
40	I/O 0	I/O 0	I/O 0
41	D6	D6	D6
42	D7	D7	D7
43	D4	D4	D4
44	D5	D5	D5
45	D2	D2	D2
46	D3	D3	D3
47	D0	D0	D0
48	D1	D1	D1
49	$\overline{\text{STB2}}$	$\overline{\text{STB2}}$	$\overline{\text{STB2}}$
50	$\overline{\text{STB3}}$	$\overline{\text{STB3}}$	$\overline{\text{STB3}}$
51	$\overline{\text{STB0}}$	$\overline{\text{STB0}}$	$\overline{\text{STB0}}$
52	STB1	STB1	STB1
53	A2	A2	A2
54	A3	A3	A3
55	A0	A0	A0
56	A1	A1	A1
57	DPL	DPL	DPL
58	GND	GND	GND
59	—	—	—
60	—	—	—
61	− 12 V	− 12 V	− 12 V
62	− 12 V	− 12 V	− 12 V
63	+ 12 V	+ 12 V	+ 12 V
64	+ 12 V	+ 12 V	+ 12 V
65	− 5 V	− 5 V	− 5 V
66	− 5 V	− 5 V	− 5 V
67	+ 5 V	+ 5 V	+ 5 V
68	+ 5 V	+ 5 V	+ 5 V
69	—	—	—
70	IRQ	IRQ	IRQ
71	GND	GND	GND
72	GND	GND	GND

PIN NUMBER	J7 A10 COUNTER	J6 A07 ANALOG INTERFACE	J5 A06 RECEIVER	J4 A04 SCOPE AMPLIFIER
1	GND	GND	GND	GND
2	AUDIO	EXT. VERT. IN	—	GND
3	—	GND	SQ. IND.	SQ. IND.
4	10.7 MHz	GND	10.7 MHz	—
5	—	—	—	HOR. VERN. 2
6	AD INT	—	—	—
7	—	—	—	EXT. HOR. IN**
8	COUNT INT	—	—	—
9	REC. AUD.	REC. AUD.	REC. AUD.	REC. AUD.
10	MOD OUT	MOD OUT	MOD OUT	MOD OUT
11	AM MOD AUDIO	AM MOD AUDIO	AM MOD AUDIO	—
12	DEMOD OUT	DEMOD OUT	DEMOD OUT	DEMOD OUT
13	BTRY. SENS.	BTRY. SENS.	—	—
14	A/D INPUT	A/D	—	—
15	PCT AM	PCT AM	PCT AM	—
16	—	AGC	AGC	—
17	—	—	SQ. POT. 1	SQ. POT. 1
18	—	—	SQ. POT. 2	SQ. POT. 2
19	VOL. 1	VOL. 1	VOL. 1	VOL. 1
20	VOL. 2	VOL. 2	VOL. 2	VOL. 2
21	CAR. & MOD LEVEL OUT	CAR. & MOD LEVEL OUT	—	—
22	—	POWER METER	POWER METER	—
23	—	—	—	HV
24	1 kHz	—	—	—
25	—	—	—	—
26	MOD	—	—	—
27	—	—	—	VERT. VERN. 1
28	—	—	—	VERT. VERN. 2
29	—	—	—	TRIG. LVL 2
30	—	—	—	TRIG. LVL 3
31	—	—	—	HOR. POS. 3
32	—	—	—	TRIG. LVL 1
33	—	—	—	HOR. POS. 1
34	—	—	—	HOR. POS. 2
35	—	—	—	VERT. POS. 2
36	—	—	—	VERT. POS. 3
37	—	—	—	—
38	—	—	—	VERT. POS. 1
39	P.O.R.	P.O.R.	P.O.R.	P.O.R.
40	—	—	—	—
41	D6	D6	D6	D6
42	D7	D7	D7	D7
43	D4	D4	D4	D4
44	D5	D5	D5	D5
45	D2	D2	D2	D2
46	D3	D3	D3	D3
47	D0	D0	D0	D0
48	D1	D1	D1	D1
49	$\overline{\text{STB2}}$	$\overline{\text{STB2}}$	$\overline{\text{STB2}}$	$\overline{\text{STB2}}$
50	$\overline{\text{STB3}}$	$\overline{\text{STB3}}$	$\overline{\text{STB3}}$	$\overline{\text{STB3}}$
51	$\overline{\text{STB0}}$	$\overline{\text{STB0}}$	$\overline{\text{STB0}}$	$\overline{\text{STB0}}$
52	STB1	STB1	STB1	STB1
53	A2	A2	A2	A2
54	A3	A3	A3	A3
55	A0	A0	A0	A0
56	A1	A1	A1	A1
57	SIGN	SIGN	—	—
58	GND	GND	GND	GND
59	—	—	GND	—
60	PK. DET.	PK. DET.	—	—
61	− 12 V	− 12 V	− 12 V	− 12 V
62	− 12 V	− 12 V	− 12 V	− 12 V
63	+ 12 V	+ 12 V	+ 12 V	+ 12 V
64	+ 12 V	+ 12 V	+ 12 V	+ 12 V
65	− 5 V	− 5 V	− 5 V	− 5 V
66	AC/DC SEL.	AC/DC SEL.	—	—
67	+ 5 V	+ 5 V	+ 5 V	+ 5 V
68	+ 5 V	+ 5 V	+ 5 V	+ 5 V
69	10 MHz	—	—	—
70	IRQ	—	—	—
71	GND	GND	GND	GND
72	GND	GND	GND	GND

**From Filter Board on Front Panel

PIN NUMBER	J13 A03 SCOPE MODULE
1	+ 33 V
2	GND
3	HV
4	+ 12 V

PIN NUMBER	J14 A13 REF/AUDIO MODULE
1	GND
2	+ 5 V
3	GND
4	+ 12 AUX
5	GND
6	AUDIO

PIN NUMBER	J1 A14 FRONT PANEL INTERFACE	J3* A11 RF INTERFACE
1	GND	D7
2	LC BUSY	D0
3	C5	D1
4	340 kHz	D2
5	C3	D3
6	C4	D4
7	C1	A1
8	C2	A0
9	R7	STB1
10	C0	A2
11	R5	A3
12	R6	+ 5 V
13	R3	GND
14	R4	ALC
15	R1	LO/HI SEL.
16	R2	CAR. & MOD. LEVEL OUT
17	BW. W/N	POWER METER
18	R0	AM MOD AUDIO
19	BAT 1	$\overline{\text{P.O.R.}}$
20	—	D5
21	SIG. GND	D6
22	AF OUT	STB3
23	AF OUT	12 V
24	1 kHz	+ 12 V
25	TN. SYN. OUT	—
26	MOD	—
27	EXT. MOD IN	—
28	—	—
29	PTT	—
30	MIC INPUT	—
31	1 kHz LEV. 2	—
32	REC. AUD.	—
33	EXT. LEV. 2	—
34	1 kHz LEV. 1	—
35	CD. SYN. LEV. 2	—
36	EXT. LEV. 1	—
37	GND	—
38	CO. SYN. LEV. 1	—
39	P.O.R.	—
40	GND	—
41	D6	—
42	D7	—
43	D4	—
44	D5	—
45	D2	—
46	D3	—
47	D0	—
48	D1	—
49	STB2	—
50	STB3	—
51	$\overline{\text{STB0}}$	—
52	$\overline{\text{STB1}}$	—
53	A2	—
54	A3	—
55	A0	—
56	A1	—
57	GND	—
58	GND	—
59	GND	—
60	GND	—
61	− 12 V	—
62	− 12 V	—
63	+ 12 V	—
64	+ 12 V	—
65	− 5 V	—
66	− 5 V	—
67	+ 5 V	—
68	+ 5 V	—
69	EXT. VERT. IN	—
70	GND	—
71	GND	—
72	GND	—

*J2 has 60 pins; J3 has 24 pins.

PIN NUMBER	J1 A14 FRONT PANEL INTERFACE	J3* A11 RF INTERFACE	J12 A05 RF SYNTHESIZER	J2* A19 FRONT PANEL
1	GND	D7	GND	—
2	LC BUSY	D0	GND	R0
3	C5	D1	—	R2
4	340 kHz	D2	—	R4
5	C3	D3	—	R6
6	C4	D4	—	C0
7	C1	A1	1 kHz	C2
8	C2	A0	1 kHz	C4
9	R7	STB1	—	—
10	C0	A2	—	GND
11	R5	A3	—	EXT. LEV. 2
12	R6	+ 5 V	—	CD SYN. LEV. 2
13	R3	GND	—	GND
14	R4	ALC	—	GND
15	R1	LO/HI SEL	10 MHz	GND
16	R2	CAR & MOD LEVEL OUT	10 MHz	EXT. LEV. 1
17	BW. W /N	POWER METER	A1	ON/OFF PIN 1
18	R0	AM MOD AUDIO	A1	VOL 2
19	BAT 1	$\overline{\text{P.O.R.}}$	A0	SQ. 2
20	—	D5	A0	SQ. IND.
21	SIG. GND	D6	STB1	TRIG. 3
22	AF OUT	STB3	STB1	SQ. 1
23	AF OUT	12 V	A3	VERT. POS. 2
24	1 kHz	+ 12 V	A3	HOR. POS. 1
25	TN. SYN. OUT	—	A2	HOR. POS. 3
26	MOD	—	A2	TRIG. 2
27	EXT. MOD IN	—	—	HOR. VERN. 2
28	—	—	—	VERT. VERN. 1
29	PTT	—	—	GND
30	MIC INPUT	—	—	GND
31	1 kHz LEV. 2	—	+ 5 VF	EXT. HOR. IN**
32	REC. AUD.	—	+ 5 VF	SPKR.
33	EXT. LEV. 2	—	- 5 VF	VERT. VERN. 2
34	1 kHz LEV. 1	—	- 5 VF	VERT. POS. 1
35	CD. SYN. LEV. 2	—	+ 33 VF	VERT. POS. 2
36	EXT. LEV. 1	—	+ 33 VF	HOR. POS. 2
37	GND	—	+ 12 VF	TRIG. 1
38	CO. SYN. LEV. 1	—	+ 12 VF	ON/OFF PIN 5
39	P.O.R.	—	- 12 VF	ON/OFF PIN 4
40	GND	—	- 12 VF	GND
41	D6	—	—	ON/OFF PIN 3
42	D7	—	—	VOL. 1
43	D4	—	—	CD. SYN. LEV. 1
44	D5	—	—	1 kHz LEV. 1
45	D2	—	D0	MIC. IN
46	D3	—	D0	MOD OUT**
47	D0	—	D1	DEMOD OUT**
48	D1	—	D1	EXT. MOD IN**
49	$\overline{\text{STB2}}$	—	D3	PTT
50	$\overline{\text{STB3}}$	—	D3	1 kHz LEV 2
51	$\overline{\text{STB0}}$	—	D2	GND
52	$\overline{\text{STB1}}$	—	D2	GND
53	A2	—	GND	C5
54	A3	—	GND	C3
55	A0	—	MOD	C1
56	A1	—	MOD	R7
57	GND	—	LO/ HI BAND	R5
58	GND	—	LO/ HI BAND	R3
59	GND	—	—	R1
60	GND	—	—	BW W /N COM.
61	- 12 V	—	—	—
62	- 12 V	—	—	—
63	+ 12 V	—	—	—
64	+ 12 V	—	—	—
65	- 5 V	—	—	—
66	- 5 V	—	—	—
67	+ 5 V	—	ALC	—
68	+ 5 V	—	ALC	—
69	EXT. VERT. IN	—	—	—
70	GND	—	—	—
71	GND	—	GND	—
72	GND	—	GND	—

*J2 has 60 pins; J3 has 24 pins.

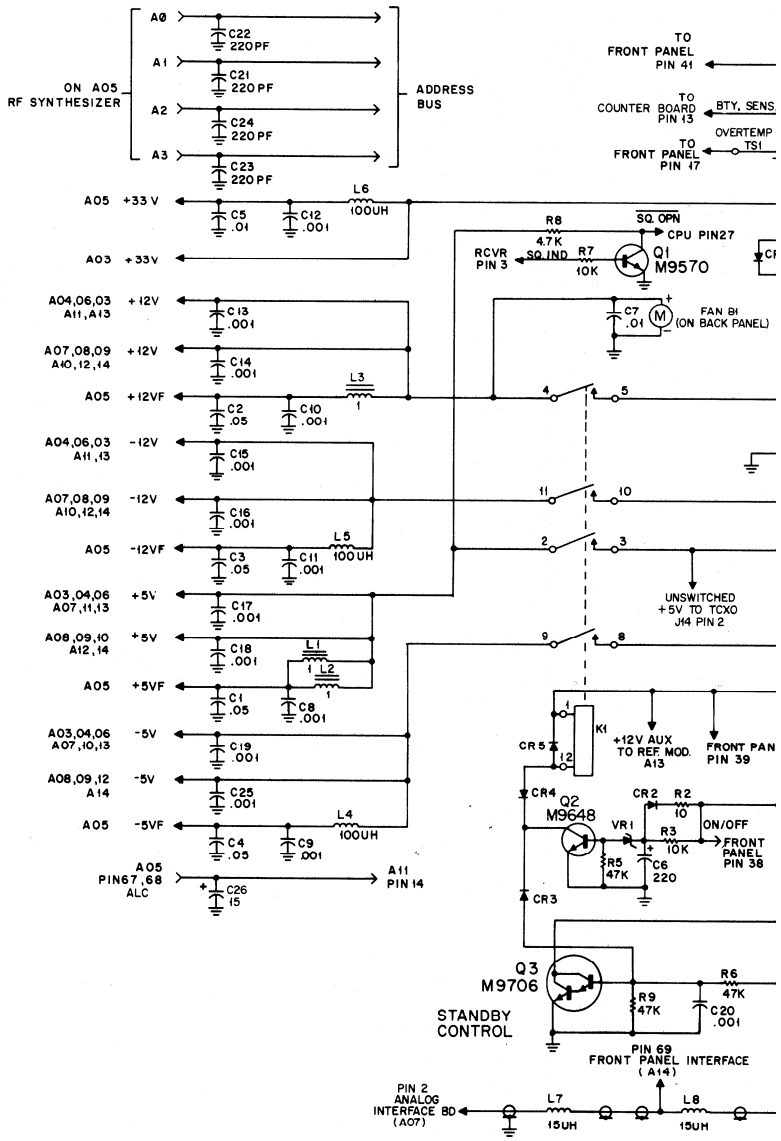

EEPS

MAIN IN

SCHEMA

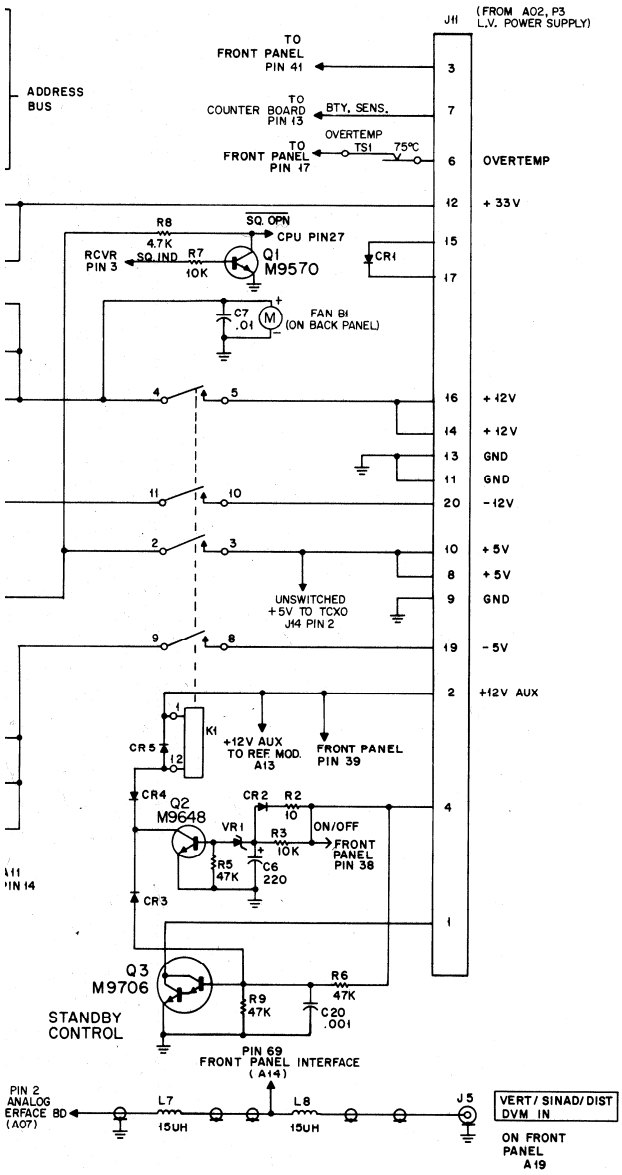

EEPS-36450-A

NOTE:

1. Unless otherwise specified; all resistors are in ohms; all capacitors are in microfarads; and all inductors are in millihenries.
2. A list of assemblies referenced is shown in Table 1.

Table 1. List of Assemblies

Assembly Number	Assembly/Subassembly Name
A01	Rear Panel
A02	Low Voltage Power Supply
A03	Scope Module
A04	Scope Amplifier Board
A05	RF Synthesizer Module
A06	Receiver Board
A07	Analog Interface Board
A08	CPU Board
A09	Option
A10	Counter Board
A11	RF Module
A12	Tone Synthesizer Board
A13	Reference/Audio Module
A14	Front Panel Interface Board
A15	Front Panel Display Board
A16	Battery Pack
A17	Chassis Mechanical Less Rear Panel and Main Interconnect Board
A18	Main Interconnect Board
A19	Front Panel

MAIN INTERCONNECT BOARD (A18)

MODEL RTL4099A
SCHEMATIC DIAGRAM, CIRCUIT BOARD DETAIL,
AND PARTS LIST

FUNCTION

The main interconnect board provides a common interface for all of the modules and circuit boards. This includes the power supply lines, address and data lines, and any other lines which are needed for the boards to interconnect to one another. These same signals are routed from the board through wires or ribbon cables to other modules (modules that do not plug directly into the main interconnect board). The board also contains circuitry that delays the power supply when switching from the STBY to ON position, and filtering of the supply lines that go into the rf synthesizer. The front panel wiring harness plugs into this board.

NOTE:

1. Unless otherwise specified; all resistors are in ohms; all capacitors are in microfarads; and all inductors are in millihenries.
2. A list of assemblies referenced is shown in Table 1.

Table 1. List of Assemblies

Assembly Number	Assembly/Subassembly Name
A01	Rear Panel
A02	Low Voltage Power Supply
A03	Scope Module
A04	Scope Amplifier Board
A05	RF Synthesizer Module
A06	Receiver Board
A07	Analog Interface Board
A08	CPU Board
A09	Option
A10	Counter Board
A11	RF Module
A12	Tone Synthesizer Board
A13	Reference/Audio Module
A14	Front Panel Interface Board
A15	Front Panel Display Board
A16	Battery Pack
A17	Chassis Mechanical Less Rear Panel and Main Interconnect Board
A18	Main Interconnect Board
A19	Front Panel

68P81064E69-O
(Sheet 2 of 2)
8/12/83-PHI

FRONT PANEL (A19)

The front panel assembly consists of a front panel display board (A15), a filter board, and the R2200 Service Monitor operating switches and controls. The front panel display board is described in instruction section 68P81064E66 in this manual. The filter board is shown as part of Chassis Mechanical instruction section 68P81064E68 in this manual. The front panel operating switches and controls are shown schematically in the respective instruction sections wherein the switches and controls interact. The front panel parts list is a part of the Basic Chassis Kit Model RTX1008A which appears in Chassis Mechanical instruction section 68P81064E68.

1. ACCESSORY KIT RPX4097A

1.1 Accessory Kit RPX4097A consists of a connector shell, clamp, and four connector pins. These parts can be used to fabricate a mating plug for the male dc power connector at the back of the service monitor. This enables a user to make a dc power cable to interconnect a separate power source to the service monitor.

1.2 Assemble the connector kit as follows:

Step 1. Connect pin 1 to + (11 to 17 V dc); pin 2 to NC; pin 3 to NC; and pin 4 to ground.

NOTE

Use wire large enough to carry 6 amps with no significant loss, i.e,
18 AWG for up to 6 feet;
20 AWG for up to 16 feet.
The terminals supplied are #18-#14 with inside diameter .110"-.150".

Step 2. Select EXT DC on the rear panel.

Step 3. With no ac power applied to the service monitor, turn the service monitor to ON and measure the external dc voltage using the BATT measurement on the right LCD. This voltage must be between 11 and 17 volts dc for proper operation.

NOTE

If ac power is connected to the service monitor, ac power is used automatically rather than dc power.

parts list

RPX4097A Accessory Kit — PL-8479-O

REFERENCE SYMBOL	MOTOROLA PART NO.	DESCRIPTION
		connector, receptable:
P1	15-10811A08	housing, 4-contact
	9-83741F01	female; single-contact; 4 used
		mechanical part
	15-10812A01	SHELL, connector

2. TEST MICROPHONE RTM4000B

The test microphone contains the microphone element and a push-to-talk (PTT) switch. The microphone converts speech to transmit audio signals for the service monitor. The PTT switch turns the microphone on and off.

parts list

RTM4000B Test Microphone — PL-8477-O

REFERENCE SYMBOL	MOTOROLA PART NO.	DESCRIPTION
		capacitor, fixed:
C1	23-82601A34	2 uF + 100-10%; 25 V
C2, 3	21-84547A17	3300 pF ± 20%; 25 V
		cartridge:
DP1	50-83905L01	dynamic, impedance, 400 ohm; ± 20%; @1 kHz
		connector, receptacle:
J1	28-16370	male; 4-contact
		transistor: (see note)
Q1	48-869642	NPN; type M9642
		switch:
S1	40-84241G05	dpdt, slide
		integrated circuit: (see note)
U1	51-84333G79	preamplifier hybrid
		mechanical parts
	1-80796B52	ASSEMBLY, preamplifier; includes: C2, C3, Q1, U1
	3-139797	SCREW, tapping; 5-20 × 5/8"; 3 used
	15-83573L01	HOUSING, microphone front
	33-80348A01	NAMEPLATE
	33-83577L01	NAMEPLATE
	35-83575L01	GRILLECLOTH
	38-83574L01	PUSHBUTTON, microphone
	54-84962K01	TAG, safety
	30-83586L01	CORD, coiled; 3 conductor
	41-83576L01	SPRING, strain relief
	4-1725	WASHER, flat; 0.266 × 0.562 × .040
	4-82707B01	WASHER, flat
	15-83572L01	HOUSING, microphone rear
	29-5247	LUG, soldering

note: For optimum performance, diodes, transistors, and integrated circuits must be ordered by Motorola part numbers.

95-80312B69 Tol

GENERAL

Software enhancements have been made to the R2200 since the printing of this instruction manual. The purpose of this revision is to explain how these changes affect the operation of the service monitor. The following information should be used in place of section 3.4.1 on page 3-3 of the operator's manual.

GENERATOR AND MONITOR FREQUENCY PROGRAMMING

The R2200 service monitor now has the capability of storing a separate RF frequency for monitor and generate. To program the monitor frequency set the function switch to "Pwr Mon" or "Sens Mon". To enter a monitor frequency press the [Freq] program key. Immediately, the first digit on the left LCD will blink indicating the point of entry. Next, enter the desired frequency. Resolution is specified at 100 Hz on frequencies to 999.9999MHz meaning seven decimal digits are valid entries. As the 7 digits are entered using the keys 0 thru 9, the blinking cursor moves to the right automatically but may also be manually moved using [▷] right or [◁] left cursors. To clear the entire entry, press [Reset]. If the [Reset] key is immediately depressed a second time, the original number stored in memory is displayed and the programming sequence is terminated. Pressing [Enter] loads the frequency and also leaves the frequency programming mode.

For example, if a frequency of 190.050 MHz is present in the left LCD display, an RF monitor frequency of 455.321 MHz can be entered into the non-volatile memory as:

PRESS NUMERIC KEY	PRESS PROGRAM KEY	DISPLAY	COMMENT
	Freq	190.050	
4		490.050	
5		450.050	
6		456.050	
	◁	456.050	Manually correct entry
5		455.060	
321		455.321	Complete entry
	Enter	455.321	

Note: Boxed area indicates flashing digit. (point of data entry)

The monitor RF frequency is now stored. The same sequence is used to program the generator RF frequency, except the function switch should be set to the "Gen" or "Hi Gen" position.

FREQUENCY COPYING

If the desired generator frequency is to be the same as the programmed monitor frequency, it is not necessary to enter the frequency twice. The frequency copy mode can be used as follows:

PRESS NUMERIC KEY	PRESS PROGRAM KEY	DISPLAY	COMMENT
	Freq	455.3210	Displays monitor frequency
		(previously stored generator frequency now displayed)	Set function switch to "Gen" or "Hi Gen"
	Freq	455.3210	Displays monitor frequency again
	Enter	455.3210	Generator frequency is now 455.3210

The programmed generator frequency is now the same as the monitor frequency. In a similar manner, the monitor frequency can be copied from the stored generator frequency.

FREQUENCY STEPPING

Frequency stepping can be accomplished by using the [Tone Data] and [Dev Lim] keys. First, enter the frequency programming mode by pressing the [Freq] key. The flashing digit can now be decremented using the [Tone Data] key or incremented using the [Dev Lim] key. Even while the digit is flashing, the frequency indicated on the display is the actual operating frequency. It is not necessary to press [Enter] every time a change is made. Frequencies are stored in non-volatile memory when [Enter] is pressed. The [▷] and [◁] keys are used to position the flashing cursor as desired.

PRESS NUMERIC KEY	PRESS PROGRAM KEY	DISPLAY	COMMENT
	[Freq]	455.3210	enter program mode
	[▷]	455.3210	reposition flashing digit
	[▷]	455.3210	
	[▷]	455.3210	
	[Dev Lim]	455.4210	100 KHz increment
	[Dev Lim]	455.5210	100 KHz increment
	[Tone Data]	455.4210	100 KHZ decrement
	[Enter]	455.4210	flashing ceases exit program mode