REFERENCE SYMBOL	MOTOROLA PART NO.	DESCRIPTION
C329	21-82428B59	.01 uF + 80-20%; 200 V
C330	21-84494B74	6 ± 5%; 500 V
C331 thru 334	21-82428B59	.01 uF + 80-20%; 200 V
C335	21-84494B37	11 ± 5%; 500 V
C336	21-84494B74	6 ± 0.5 pF; 500 V
C337, 338	21-82428B59	.01 uF + 80-20%; 200 V
C339	23-84665F01	10 uF; 25 V
C340	21-80376A17	100; 50 V (chip)
C341	21-82428B10	3300
C342	23-84665F01	10 uF; 25 V
C343	21-82428B10	3300
C344, 345	23-84665F01	10 uF; 25 V
C346, 347	21-83076A18	220; 50 V (chip)
C348	21-80376A26	2200; 50 V (chip)
C349	23-82397D04	15 uF ± 20%; 15 V
C350	23-83441B15	1.0 uF ± 20%; 35 V
C351 thru 369	21-82543H03	5000 + 80-20%; 500 V
C370	21-80376A17	100; 50 V (chip)
C371	23-83441B15	1.0 uF ± 20%; 35 V
C372, 373	21-82187B14	1000
C374, 375	21-80376A25	1000; 50 V (chip)
C376, 377	23-83441B18	4.7 uF ± 20%; 20 V
C378	23-83441B15	1.0 uF ± 20%; 35 V
C379	21-80376A25	1000; 50 V (chip)
C380	21-80376A17	100; 50 V (chip)
C381	21-80376A25	1000; 50 V (chip)
C382	21-80376A01	1.5 ± 0.5 pF; 50 V (chip)
C383	23-82397D18	33 uF ± 20%; 10 V
C384	21-80376A06	10 ± 5%; 50 V (chip)
C385, 386	21-80376A25	1000; 50 V (chip)
C387	21-80376A04	4.7 ± 0.5 pF; 50 V (chip)
C388	21-80376A01	1.5 ± 0.5 pF; 50 V (chip)
C389	21-80376A14	220 ± 2%; 50 V (chip)
C390 thru 393	21-80376A18	220; 50 V (chip)
C394, 395	21-859936	15 ± 5%; 500 V
C396	21-80376A25	1000; 50 V (chip)
C397	21-80369A83	2 ± 0.5 pF; 500 V
C398	21-8711966	10; 200 V
	or 21-859934	5 ± 0.5 pF; 500 V
C399, 400	21-80376A18	220; 50 V (chip)
C401	21-871966	5; 500 V
C500	21-80376A18	22; 50 V (chip)
C501	21-80376A06	10; 50 V (chip)
		diode:
CR201	48-82190H32	varactor
CR202 thru 205	48-82617C01	silicon
CR206 thru 212	48-80345A62	silicon
CR214	48-82617C01	silicon
CR215, 216	48-82190H47	varactor
CR217, 218	48-82190H37	varactor
CR219, 220	48-82617C01	silicon
CR221, 222	48-84616A01	hot carrier
CR223 thru 226	48-80345A62	silicon
CR227	48-82617C01	silicon
CR229, 230	48-80397A25	varactor
CR233	48-82617C01	silicon
CR235, 126	48-80397A25	varactor
CR241, 242	48-80345A62	silicon
		filter, crystal:
FL201	91-80376A36	10 MHz, 2-pole
		relay:
K201	80-80346A02	
		coil:
L201, 202	24-80369A19	0.1 uH
L203	24-80369A50	air wound, 1T 20
L204, 205	24-80369A19	0.1 uH
L206, 207, 208	24-80369A49	air wound, 1T 20
L209, 210	24-83961B01	choke, rf
L211	24-80369A23	0.15 uH ± 10%
L213, 214	24-80369A50	air wound, 1T 20
L215	24-83961B01	choke, rf
L216, 217	24-80369A19	0.1 uH
L218	24-80369A24	0.18 uH
L219, 220	24-80369A48	air wound, 3T 24
L221, 222	24-80369A51	air wound, 4T 24
L224	24-80369A25	0.22 uH
L225	24-80369A26	0.33 uH
L226, 227	24-80369A19	0.1 uH
L228	24-80369A27	0.47 uH
L229	24-80369A26	0.33 uH
L230, 231	24-80370A39	inductor, 12 mH
L232	24-80369A14	0.47 uH ± 1%
L233	24-80369A29	10 uH
L234, 235	24-80369A37	100 uH
L236	24-80369A25	0.22 uH
L237	76-83960B01	bead, ferrite
L238	24-80369A23	0.15 uH ± 10%
L239	24-80369A22	1 uH ± 10%
L240	24-83961B01	choke, rf
L241	24-80370A39	inductor, 12 mH
L242	24-80369A19	0.1 uH

REFERENCE SYMBOL	MOTOROLA PART NO.	DESCRIPTION
L243	24-80369A37	100 uH
L244, 245, 246	24-80369A19	0.1 uH
L247	24-80369A37	100 uH
L248	24-80369A31	22 uH
L250	24-80369A52	
		transistor:
Q201	48-80345A46	NPN
Q202, 203	48-869571	PNP; type M9571
Q204, 205	48-84309A61	NPN
Q206	48-80345A54	dual gate MOSFET
Q207	48-869870	NPN; type MRF901
Q208, 209	48-869570	NPN; type M9570
Q210 211	48-869571	PNP; type M9571
Q212	48-80345A47	NPN
Q213, 214, 215	48-869870	NPN; type MRF901
Q216	48-869571	PNP; type M9571
Q217	48-6123A22	PNP
Q218	48-80346A65	NPN
Q219	48-2089C01	NPN
Q220	48-869870	NPN; type MRF901
Q221, 222	48-869570	NPN; type M9570
Q223	48-869933	N-channel FET; type U310
Q224, 225, 226	48-84309A61	NPN
Q227	48-869933	N-channel FET; type U310
Q228	48-869571	PNP; type M9571
Q229	48-84308A92	NPN
Q230	48-86851C32	NPN
Q231	48-80378A38	PNP
Q232	48-869870	NPN; type MRF901
Q233	48-2089C01	NPN
		resistor: ± 5%; 1/4 W: unless otherwise stated
R201	6-124A18	51
R202, 203	6-124A41	470
R204	6-124A25	100
R205	6-185A25	100; 1/8 W
R206 thru 211	6-124A41	470
R212	6-185A53	1.5k; 1/8 W
R213, 214	6-124A31	180
R215	6-124A15	39
R216, 217	6-124A41	470
R218, 219	6-124A59	2.7k
R220	6-124A79	18k
R221, 222	6-124A59	2.7k
R223	6-124A79	18k
R224	6-124A49	1k
R225	6-124A79	18k
R227	6-124A43	560
R228, 229	6-124A29	150
R230	6-185A73	10k; 1/8 W
R231	6-124A25	100
R232, 233	6-185A33	220; 1/8 W
R234	6-185A09	22; 1/8 W
R235	6-185A85	33k; 1/8 W
R236	6-185A96	51k; 1/8 W
R237	6-185A47	820; 1/8 W
R238	6-185A49	1k; 1/8 W
R239	6-124A25	100
R240	6-185A18	51; 1/8 W
R241	6-185A41	470; 1/8 W
R242, 243	6-185A43	560; 1/8 W
R244	6-185A53	1.5k; 1/8 W
R245, 246	6-185A33	220; 1/8 W
R247	6-124A31	180
R248, 249	6-185A05	15; 1/8 W
R250	6-124A97	100k
R251	6-124A85	33k
R252	6-185A57	2.2k; 1/8 W
R253	6-185A49	1k; 1/8 W
R254	6-185A53	1.5k; 1/8 W
R255	6-185A45	680; 1/8 W
R256, 257	6-185A09	22; 1/8 W
R258	6-185A21	68; 1/8 W
R259 thru 264	6-185A49	1k; 1/8 W
R265	6-124A73	10k
R266	6-124A65	4.7k
R267	6-185A57	2.2k; 1/8 W
R268	6-185A65	4.7k; 1/8 W
R269	6-185A59	2.7k; 1/8 W
R270	6-185A75	12k; 1/8 W
R271	6-185A67	5.6k; 1/8 W
R272	6-185A29	150; 1/8 W
R273	6-185A71	8.2k; 1/8 W
R274	6-185A75	12k; 1/8 W
R275	6-185A37	330; 1/8 W
R276	6-185A29	150; 1/8 W
R277	6-124A31	180
R278	6-185A17	47; 1/8 W
R279	6-185A05	15; 1/8 W
R281	6-185A53	1.5k; 1/8 W
R282, 283	6-185A33	220; 1/8 W
R284, 285	6-185A05	15; 1/8 W
R286	6-185A27	120; 1/8 W

REFE SYI
R287
R288
R289
R290
R291, 2
R293
R294
R295, 2
R297
R298, 2
R300
R301
R302, 3
R304
R305
R307
R308
R309
R310 th
R314, 3
R319
R320
R321
R322
R323
R324
R325
R326
R327
R328
R329
R330
R331
R332, 3
R334
R335
R336
R337, 3
R339
R340
R341
R342
R343
R344
R345, 3
R347
R348
R349
R350
R351
R352
R353
R354
R355
R356
R357
R358
R359, 3
R361
R362
R363 th
R368
R369
R370
R371
R372
R373
R374
R375
R376
R377
R378
R379
R380
R381
R382
R383
R384
R385
R386
R387
R389
R390
R391
R392
R393
R394, 3
R396
R397
R398

REFERENCE SYMBOL	MOTOROLA PART NO.	DESCRIPTION
R287	6-185A21	68; 1/8 W
R288	6-185A27	120; 1/8 W
R289	6-185A13	33; 1/8 W
R290	6-185A07	18; 1/8 W
R291, 292	6-185A69	6.8k; 1/8 W
R293	6-185A63	3.9k; 1/8 W
R294	6-185A39	390; 1/8 W
R295, 296	6-185A36	300; 1/8 W
R297	6-185A07	18; 1/8 W
R298, 299	6-185A44	620; 1/8 W
R300	6-185A18	51; 1/8 W
R301	6-124A15	39
R302, 303	6-124A33	220
R304	6-124A45	680
R305	6-124A35	270
R307	6-124A15	39
R308	6-124A49	1k
R309	6-124A59	2.7k
R310 thru 313	6-124A73	10k
R314, 315	6-124A53	1.5k
R319	6-185A57	2.2k; 1/8 W
R320	6-185A94	75k; 1/8 W
R321	6-185A97	100k; 1/8 W
R322	6-185A49	1k; 1/8 W
R323	6-185A73	10k; 1/8 W
R324	6-124A36	300
R325	6-124A07	18
R326	6-124A36	300
R327	6-124A43	560
R328	6-185A65	4.7k; 1/8 W
R329	6-185A41	470
R330	6-185A75	12k; 1/8 W
R331	6-124A41	470
R332, 333	6-185A36	300; 1/8 W
R334	6-185A07	18; 1/8 W
R335	6-185A18	51; 1/8 W
R336	6-185A53	1.5k; 1/8 W
R337, 338	6-185A05	15; 1/8 W
R339	6-185A18	51
R340	6-185A31	180; 1/8 W
R341	6-185A13	33; 1/8 W
R342	6-185A27	120; 1/8 W
R343	6-185A47	820; 1/8 W
R344	6-185A49	1k; 1/8 W
R345, 346	6-185A43	560; 1/8 W
R347	6-185A41	470; 1/8 W
R348	6-185A21	68; 1/8 W
R349	6-185A61	3.3k; 1/8 W
R350	6-185A59	2.7k; 1/8 W
R351	6-185A35	270; 1/8 W
R352	6-124A61	3.3k
R353	6-124A35	270
R354	18-83452F16	variable, 20k
R355	6-82672B33	309 ± 1%
R356	6-124A83	27k
R357	6-185A05	15; 1/8 W
R358	6-10621D56	46.4k ± 1; 1/8 W nominal
	or 6-10621D48	38.3k ± 1%; 1/8 W
	or 6-10621D52	42.2k ± 1%; 1/8 W
	or 6-10621D60	51.1k ± 1%; 1/8 W
	or 6-10621D64	56.2k ± 1%; 1/8 W
	or 6-10621D68	61.9k ± 1%; 1/8 W
R359, 360	6-10621D36	28.7k ± 1%; 1/8 W
R361	6-124A83	27k
R362	6-124A97	100k
R363 thru 367	6-124A73	10k
R368	6-124A56	2.0k
R369	6-10621D60	51.1 ± 1%; 1/8 W
R370	6-10621C27	2150 ± 1%; 1/8 W
R371	6-10621E04	143k ± 1%; 1/8 W
R372	6-10621D74	71.5k ± 1%; 1/8 W
R373	6-10621D44	34.8k ± 1%; 1/8 W
R374	6-10621D12	16.2k ± 1%; 1/8 W
R375	6-124A73	10k
R376	6-185A05	15; 1/8 W
R377	6-124A90	51k
R378	6-124A96	91k
R379	6-124A81	22k
R380	6-124A61	3.3k
R381	6-124A91	56k
R382	6-124A56	2.0k
R383	6-124A81	22k
R384	6-124A99	120k
R385	6-124A73	10k
R386	6-124A25	100
R387	6-185A24	91; 1/8 W
R389	6-124A73	10k
R390	6-124A25	100
R391	6-124A97	100k
R392	6-124A79	18k
R393	6-124A25	100
R394, 395	6-124A75	12k
R396	6-124A01	10
R397	6-124A73	10k
R398	6-124A47	820

REFERENCE SYMBOL	MOTOROLA PART NO.	DESCRIPTION
R399	6-124A51	1.2k
R400	6-124A01	10
R401, 402, 403	6-124A49	1k
R404	6-185A49	1k; 1/8 W
R405	6-124A73	10k
R406	6-124A49	1k
R407	6-185A56	2.0k; 1/8 W
R408	6-124A25	100
R409	6-185A49	1k; 1/8 W
R410	6-185A61	3.3k; 1/8 W
R411	6-185A49	1k; 1/8 W
R412	6-185A41	470; 1/8 W
R413	6-185A45	680; 1/8 W
R414, 415	6-124A37	330
R416	6-185A65	4.7k; 1/8 W
R417	6-124A31	180
R418	6-185A33	220; 1/8 W
R419, 420	6-185A31	180; 1/8 W
R421	6-185A85	33; 1/8 W
R422	6-185A33	220; 1/8 W
R423	6-185A53	1.5k; 1/8 W
R424	6-185A51	1.2k; 1/8 W
R425	6-185A65	4.7k; 1/8 W
R426	6-185A67	5.6k; 1/8 W
R427 thru 430	6-185A37	330; 1/8 W
R431	6-185A41	470; 1/8 W
R432	6-185A21	68; 1/8 W
R434	6-185A31	180; 1/8 W
R435	6-124A56	2.0k
R436	6-185A25	100; 1/8 W
R437	6-185A23	82; 1/8 W
R500, 501	6-124A81	22k
R502	6-124A25	100
		transformer:
T201, 202	24-80369A53	2T 32 on 3B bead
		integrated circuit:
U201	51-80365A16	650 MHz prescaler
U202	51-80365A06	bi-quinary counter
U203	51-80365A01	phase frequency detector
U204	51-83629M07	operational amplifier
U205	51-80365A02	triple line receiver
U206	51-80346A05	mixer
U207	51-83629M08	operational amplifier
U208	51-80345A32	high speed 1.3 GHz divider
U209	1-84846M02	mixer
U210	51-80365A16	150 MHz prescaler
U211	51-80365A14	micro circuit; NE5534AN screened low noise operational amplifier
U212	51-80346A54	dc; 600 MHz wideband hybrid amplifier
U213	51-82884L54	dual 4-channel analog multiplexer/ demultiplexer
U214	51-84561L97	hex open drain N-channel buffer
U215	51-80365A07	operational amplifier
U216	51-82884L46	8-channel analog multiplexer/ demultiplexer
U217	51-83629H07	operational amplifier
U218	51-80365A15	differential video wideband amplifier
U219	51-83225M05	balanced modulator/demodulator
		Zener diode: ± 5%; 1/4 W: unless otherwise stated
VR201	48-83193A59	5.6 V
VR202 thru 205	48-82256C44	7.5 V
VR206, 207	48-82256C11	10 V
VR208	48-82256C34	11 V
VR209	48-86850C13	5.1 V
VR210	48-82256C34	11 V

REF. NO.	MECHANICAL PARTS	
	RTC-4010B	RF synthesizer
1	84-80335A21	PWB, rf synthesizer
2	SN63WRMAP3	SOLDER
3	11-14167A01	INK, BLK
4	26-P00210N001	SHIELD
5	26-P00210N02	SHIELD
6	26-P00210N03	SHIELD
7	26-P0021N004	SHIELD
8	26-P0021N005	SHIELD
9	26-P00210N06	SHIELD
11	1-80305A61	CABLE, semi-rigid
12	26-P00210N007	SHIELD, can
13	26-P00240N001	SHIELD, can
14	26-P00210N008	SHIELD, can
15	SN63WRP3	SOLDER
16	M23053/5-103-9	INSULATOR SLEEVING, .093 WHT
17	M23053/5-205-C	INSULATION SLEEVING, 0.187 CLR
18		INSULATION SLEEVING, 22 WHT
19		INSULATION TAPE, 1 IN YEL
20		WIRE, 24

REFERENCE SYMBOL	MOTOROLA PART NO.	DESCRIPTION
R399	6-124A51	1.2k
R400	6-124A01	10
R401, 402, 403	6-124A49	1k
R404	6-185A49	1k; 1/8 W
R405	6-124A73	10k
R406	6-124A49	1k
R407	6-185A56	2.0k; 1/8 W
R408	6-124A25	100
R409	6-185A49	1k; 1/8 W
R410	6-185A61	3.3k; 1/8 W
R411	6-185A49	1k; 1/8 W
R412	6-185A41	470; 1/8 W
R413	6-185A45	680; 1/8 W
R414, 415	6-124A37	330
R416	6-185A65	4.7k; 1/8 W
R417	6-124A31	180
R418	6-185A33	220; 1/8 W
R419, 420	6-185A31	180; 1/8 W
R421	6-185A85	33; 1/8 W
R422	6-185A33	220; 1/8 W
R423	6-185A53	1.5k; 1/8 W
R424	6-185A51	1.2k; 1/8 W
R425	6-185A65	4.7k; 1/8 W
R426	6-185A67	5.6k; 1/8 W
R427 thru 430	6-185A37	330; 1/8 W
R431	6-185A41	470; 1/8 W
R432	6-185A21	68; 1/8 W
R434	6-185A31	180; 1/8 W
R435	6-124A56	2.0k
R436	6-185A25	100; 1/8 W
R437	6-185A23	82; 1/8 W
R500, 501	6-124A81	22k
R502	6-124A25	100
		transformer:
T201, 202	24-80369A53	2T 32 on 3B bead
		integrated circuit:
U201	51-80365A16	650 MHz prescaler
U202	51-80365A06	bi-quinary counter
U203	51-80365A01	phase frequency detector
U204	51-83629M07	operational amplifier
U205	51-80365A02	triple line receiver
U206	51-80346A05	mixer
U207	51-83629M08	operational amplifier
U208	51-80345A32	high speed 1.3 GHz divider
U209	1-84846M02	mixer
U210	51-80365A16	150 MHz prescaler
U211	51-80365A14	micro circuit; NE5534AN screened low noise operational amplifier
U212	51-80346A54	dc; 600 MHz wideband hybrid amplifier
U213	51-82884L54	dual 4-channel analog multiplexer/ demultiplexer
U214	51-84561L97	hex open drain N-channel buffer
U215	51-80365A07	operational amplifier
U216	51-82884L46	8-channel analog multiplexer/ demultiplexer
U217	51-83629H07	operational amplifier
U218	51-80365A15	differential video wideband amplifier
U219	51-83225M05	balanced modulator/demodulator
		Zener diode: ± 5%; 1/4 W: unless otherwise stated
VR201	48-83193A59	5.6 V
VR202 thru 205	48-82256C44	7.5 V
VR206, 207	48-82256C11	10 V
VR208	48-82256C34	11 V
VR209	48-86850C13	5.1 V
VR210	48-82256C34	11 V

REF. NO.	MECHANICAL PARTS	
	RTC-4010B	RF synthesizer
1	84-80335A21	PWB, rf synthesizer
2	SN63WRMAP3	SOLDER
3	11-14167A01	INK, BLK
4	26-P00210N001	SHIELD
5	26-P00210N02	SHIELD
6	26-P00210N03	SHIELD
7	26-P0021N004	SHIELD
8	26-P0021N005	SHIELD
9	26-P00210N06	SHIELD
11	1-80305A61	CABLE, semi-rigid
12	26-P00210N007	SHIELD, can
13	26-P00240N001	SHIELD, can
14	26-P00210N008	SHIELD, can
15	SN63WRP3	SOLDER
16	M23053/5-103-9	INSULATOR SLEEVING, .093 WHT
17	M23053/5-205-C	INSULATION SLEEVING, 0.187 CLR
18		INSULATION SLEEVING, 22 WHT
19		INSULATION TAPE, 1 IN YEL
20		WIRE, 24

REF. NO.	MOTOROLA PART NO.	DESCRIPTION
21	RTV3145	ADHESIVE
22		WIRE, teflon; 22 solid WHT
23		INSULATING SLEEVING, 14 WHT
24	SN62WRMAP3	SOLDER

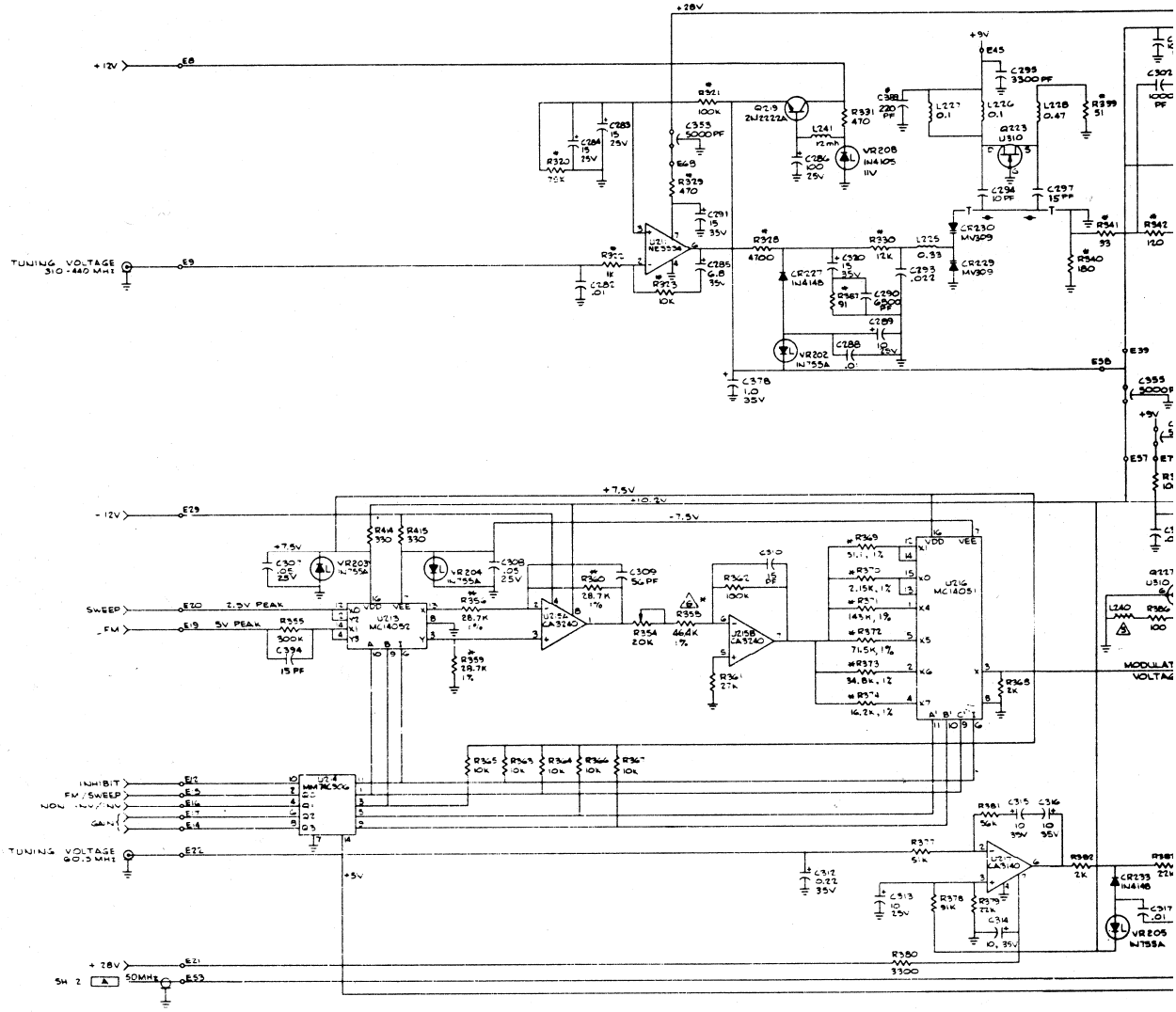

REF DES	DEVICE TYPE	SKID	+5V
U201	HC900C	1,2,3,12,14	4,5
U202	MC10138L	8	1,16
U203	MC12040L	7	1,14
U204	CA3140E	4	
U205	MC10116	8	1,16
U206	TFM-2	3	
U207	MLM324		
U208	SP8609B	6	
U209	TFM-2	3	
U210	CA3240E		
U211	NE5534AN	4	
U212	MMA100	3	
U213	MC14052	8	
U214	MM74C90N	7	14
U215	CA3240E		
U216	MC14051	8	
U217	CA3140E	4	
U218	MC11793	5	
U219	MC1496	14	

RF SYNTHESIZER (A05)

RF BOARD

MODEL RTC4010B
SCHEMATIC DIAGRAM, CIRCUIT BOARD
DETAIL, AND PARTS LIST

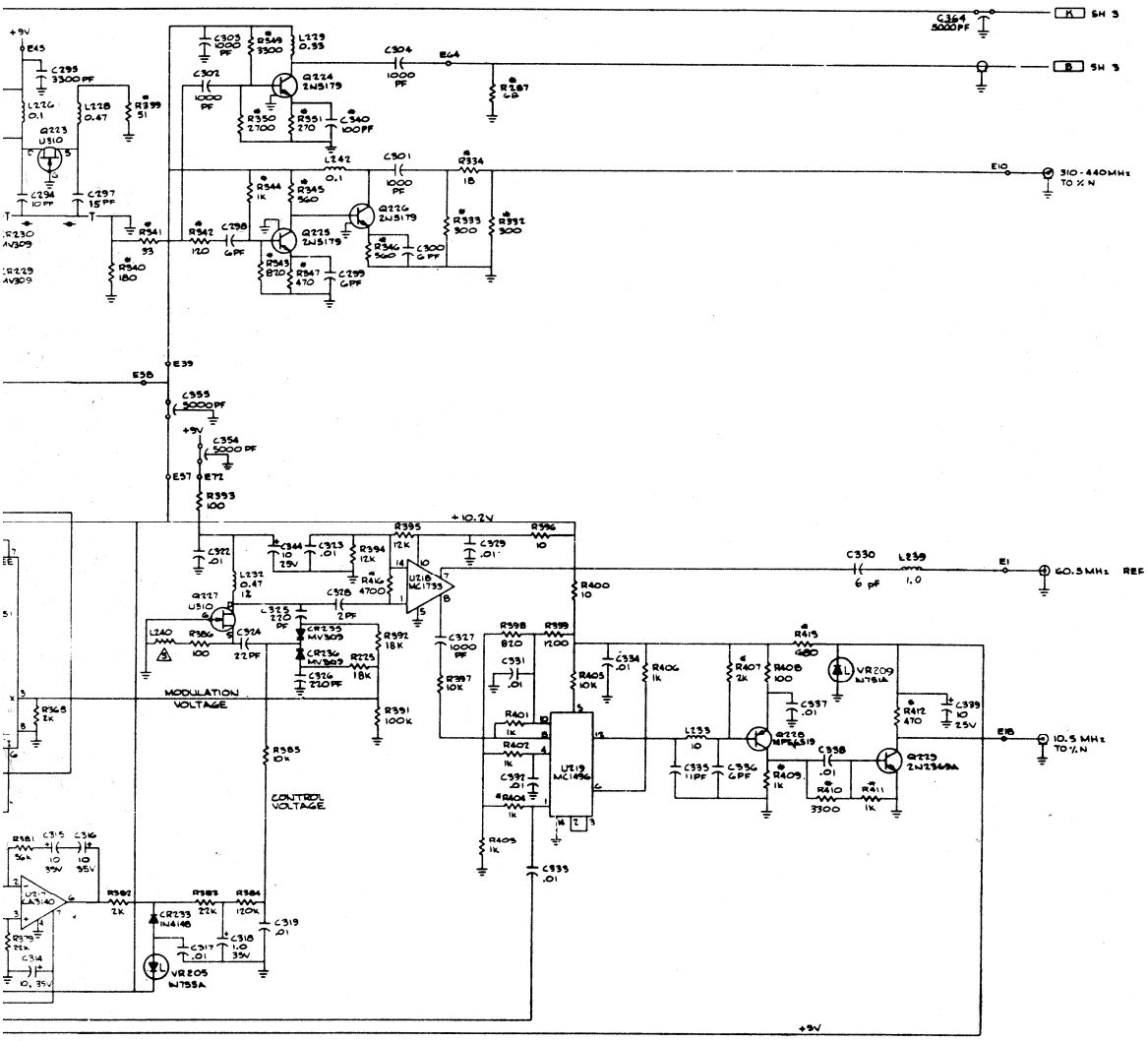

NOTES:

1. PARTIAL REFERENCE DESIGNATIONS ARE SHOWN. FOR COMPLETE DESIGNATIONS PREFIX WITH IA5.
2. FOR REFERENCE DRAWINGS REFER TO:
   01-P003885N002 MODULE ASSY
   01-P003886U001 PWB ASSY
3. UNLESS OTHERWISE SPECIFIED:
   ALL RESISTORS ARE IN OHMS ±5 PCT, 1/4W.
   ALL CAPACITORS ARE IN UF.
   ALL INDUCTORS ARE IN UH.
   ALL VOLTAGES ARE DC.
4. ⊕ MEANS 1/8W OR CHIP CAP.

⚠ 24C8996180I

⚠ SELECT IN TEST

REF DES	NOMINAL	SELECT VALUES
C388	NONE	1.5 PF
C398	NONE	5 PF, 10 PF
R358	46.4K	38.3K, 42.2K, 51.1K, 56.2K, 61.9K
R437	NONE	82

REF DES	DEVICE TYPE	SMD	+5V	-5V	+12V	-12V	NO CONNECTION
U201	11C90DC	1,2,3,12,14	4,5				2,7,10,11,13
U202	MC10138L	8	1,16				2,3,4,5,9,10,11,12,13,14,15
U203	MC12040L	7	1,14				2,4,5,8,10,11,13
U204	CA3140E	4					1,5,8
U205	MC1016	8	1,16				14,15
U206	TEM-2	3					
U207	MLM324				4	11	
U208	SP8609B	6					1,2,3,5,8,9,12,13
U209	TEM-2	3					
U210	CA3240E				8	4	
U211	NE5534AN	4					1,5,8
U212	MWA100	3					
U213	MC14052	8					1,3,11,15
U214	MM74C906	7	14				12,13
U215	CA3240E					4	
U216	MC14051	8					
U217	CA3140E	4					1,5,8
U218	MC1733	5					2,3,4,6,9,11,12,13
U219	MC1496	14					7,9,11,13

Motorola No. PEPS-37065-O
(Sheet 4 of 6)
8/12/83- PHI

RF SYNTHESIZER RF BOARD

RF SYNTHESIZER (A05)

RF BOARD

MODEL RTC4010B
SCHEMATIC DIAGRAM, CIRCUIT BOARD
DETAIL, AND PARTS LIST

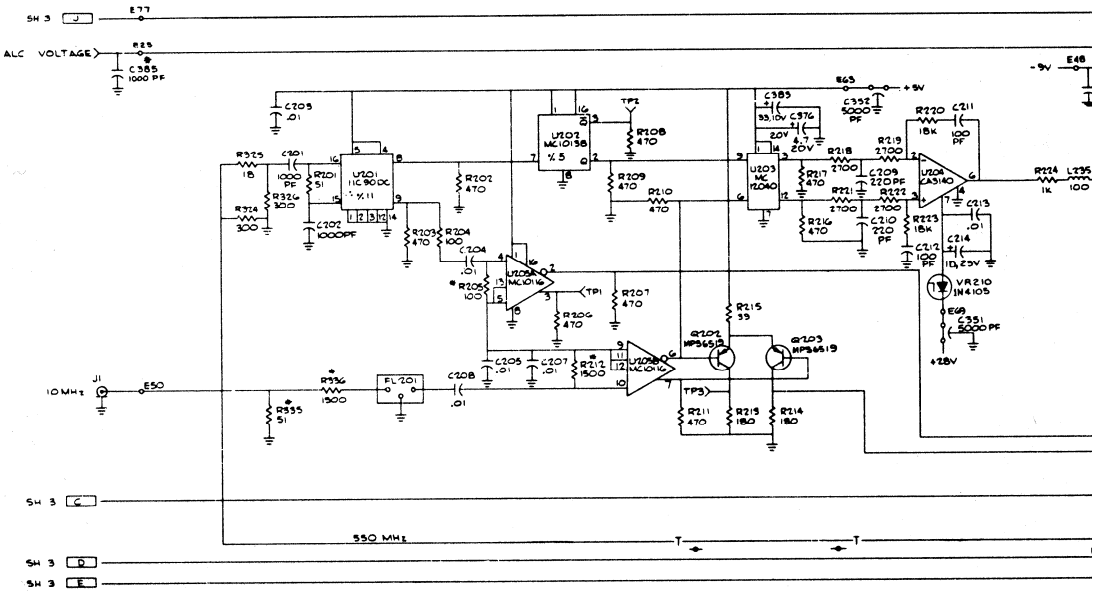

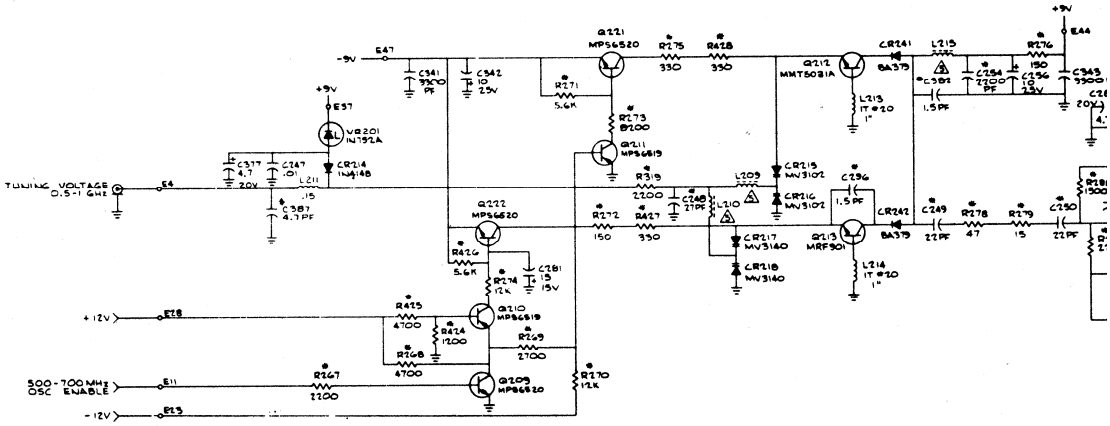

*Motorola No. **PEPS-37065-O***
(Sheet 5 of 6)
8/12/83- PHI

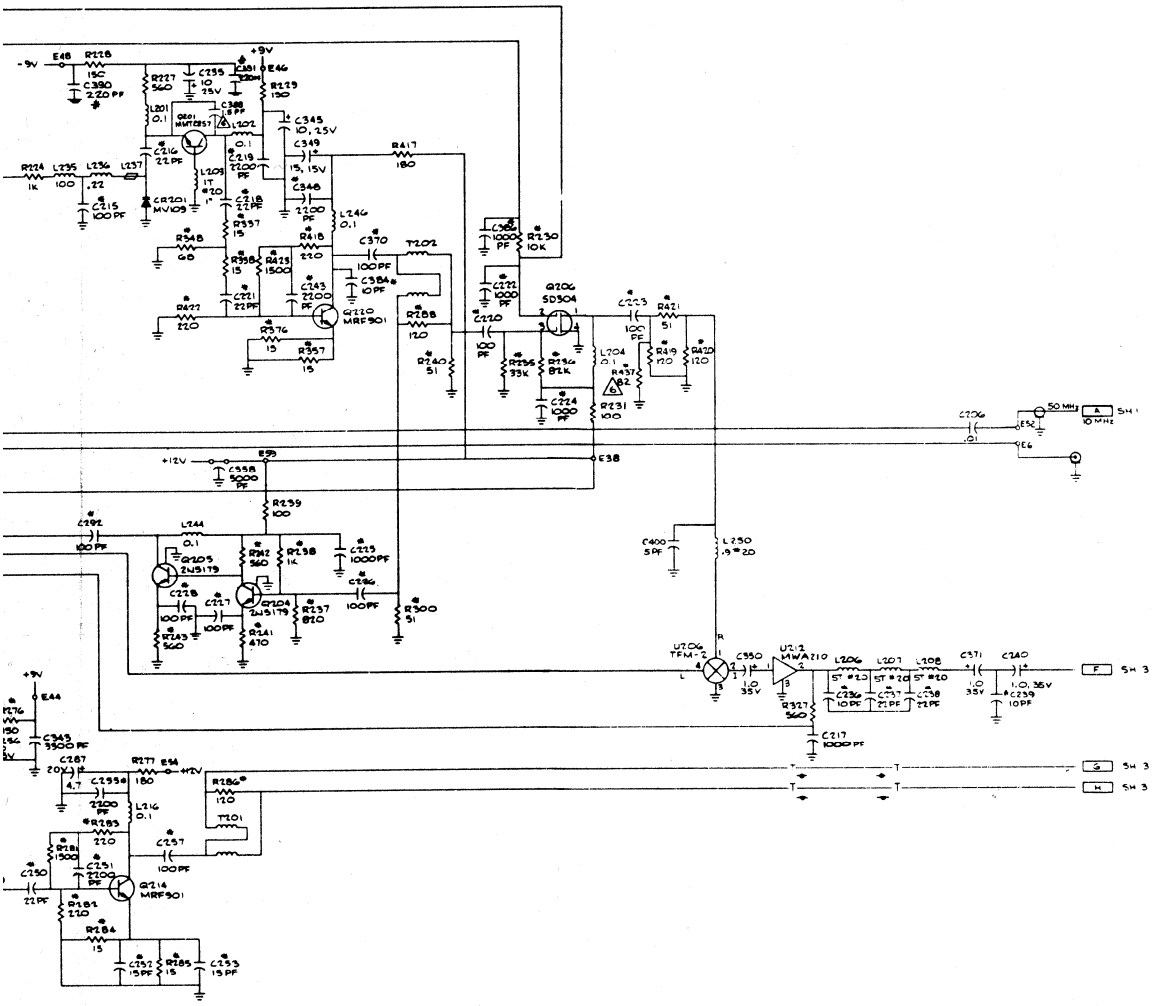
-9V
E48
R228
150
C390
220 PF
R227
560
C235
10
25V
+9V
C381
330PF
E46
R229
150
L201
0.1
Q201
MMT2857
C389
6PF
L202
C345
10, 25V
C349
15, 15V
R417
180
C216
22PF
L209
1T
#20
0.1
C219
2200
PF
C348
2200
PF
R224
1K
L235
100
L236
.22
L237
C215
100 PF
CR201
MV109
C218
22PF
L246
0.1
R337
15
R548
60
R338
15
R418
220
C370
100PF
T202
R425
1500
C384
10PF
C243
2200
PF
Q220
MRF901
R427
220
R376
15
R357
15
R288
120
R240
51
C382
1000
PF
R230
10K
C222
1000
PF
Q206
SD304
C220
100
PF
C223
100
PF
R421
51
R419
120
R420
120
R295
33K
R296
82K
L204
0.1
R437
82
C224
1000
PF
R231
100
C206
.01
50 MHz
10 MHz
SH 1
E52
E6
E38
+12V
E39
C358
5000
PF
R239
100
C292
100 PF
L244
0.1
Q205
2N5179
R242
560
R238
1K
C223
1000PF
C228
100PF
C227
100PF
Q204
2N5179
R237
820
C286
100PF
R243
560
R241
470
R300
51
C400
5PF
L250
.9 #20
U206
TFM-2
C350
1.0
35V
U212
MWA210
L206
5T #20
L207
5T #20
L208
5T #20
C371
1.0
35V
C240
1.0, 35V
C236
10PF
C237
22PF
C238
22PF
C239
10PF
F
SH 3
R327
560
C217
1000PF
+9V
E44
R276
C343
3300 PF
C287
20V
4.7
C235A
2200
PF
R277
180
E54
+12V
R286*
120
G
H
SH 3
L216
0.1
T201
*R283
220
R281
1500
C257
100PF
C250
22PF
C251
2200
PF
Q214
MRF901
R282
220
R284
15
C252
15PF
R285
15
C253
15PF

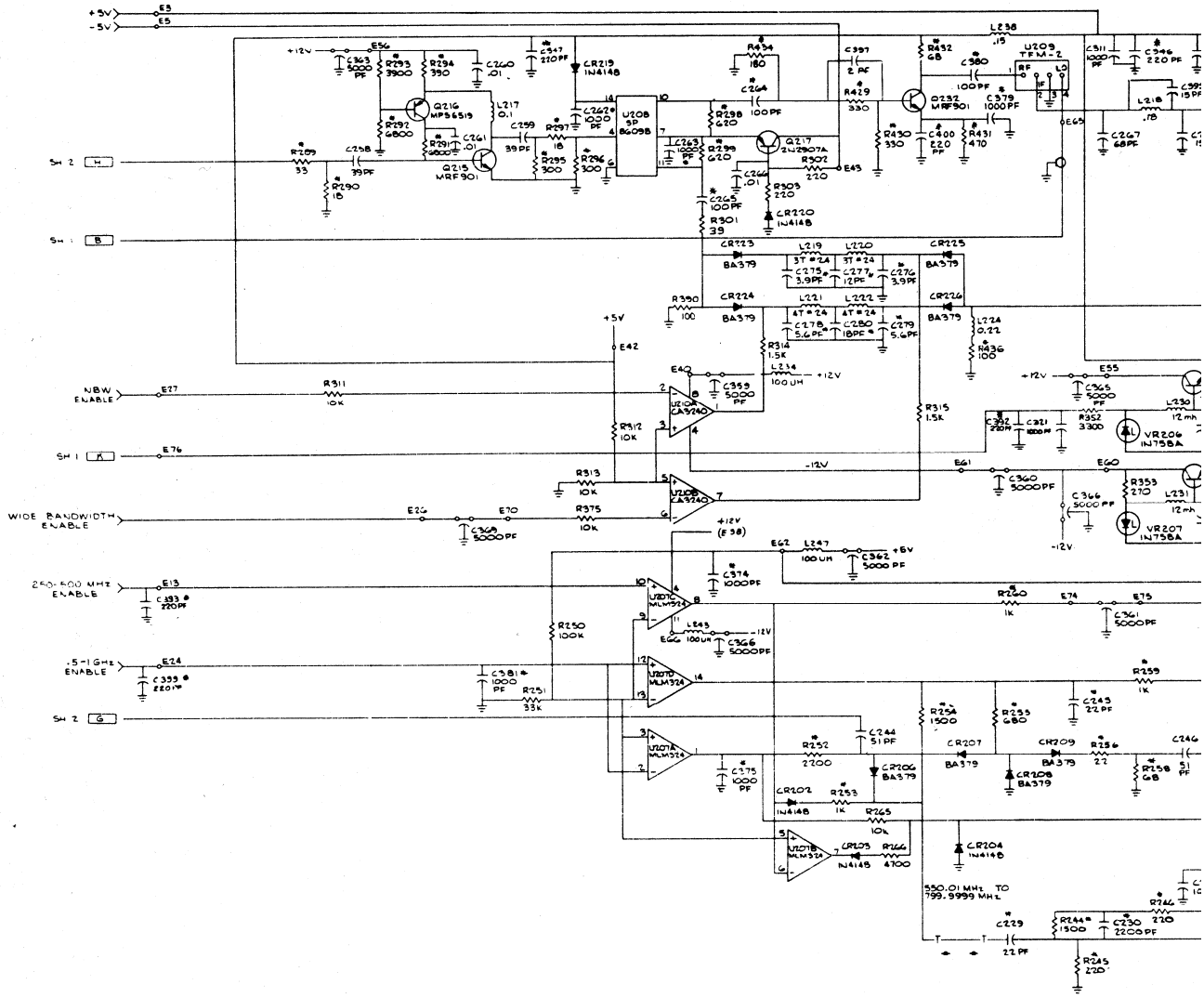
+5V
-5V
+12V
SW 2 H
SW 1 B
NBW ENABLE
SW 1 A
WIDE BANDWIDTH ENABLE
250-500 MHz ENABLE
.5-1 GHz ENABLE
SW 2 G
U208 SP 8609B
U209 TFM-2
Q216 MPS6519
Q215 MRF901
Q217 2N2907A
Q232 MRF901
U210 CA3240
U207A MLM324
U207B MLM324
U207C MLM324
VR206 IN758A
VR207 IN758A
550.01 MHz TO 799.9999 MHz

RF SYNTHESIZER (A05)

RF BOARD

MODEL RTC4010B
SCHEMATIC DIAGRAM, CIRCUIT BOARD
DETAIL, AND PARTS LIST

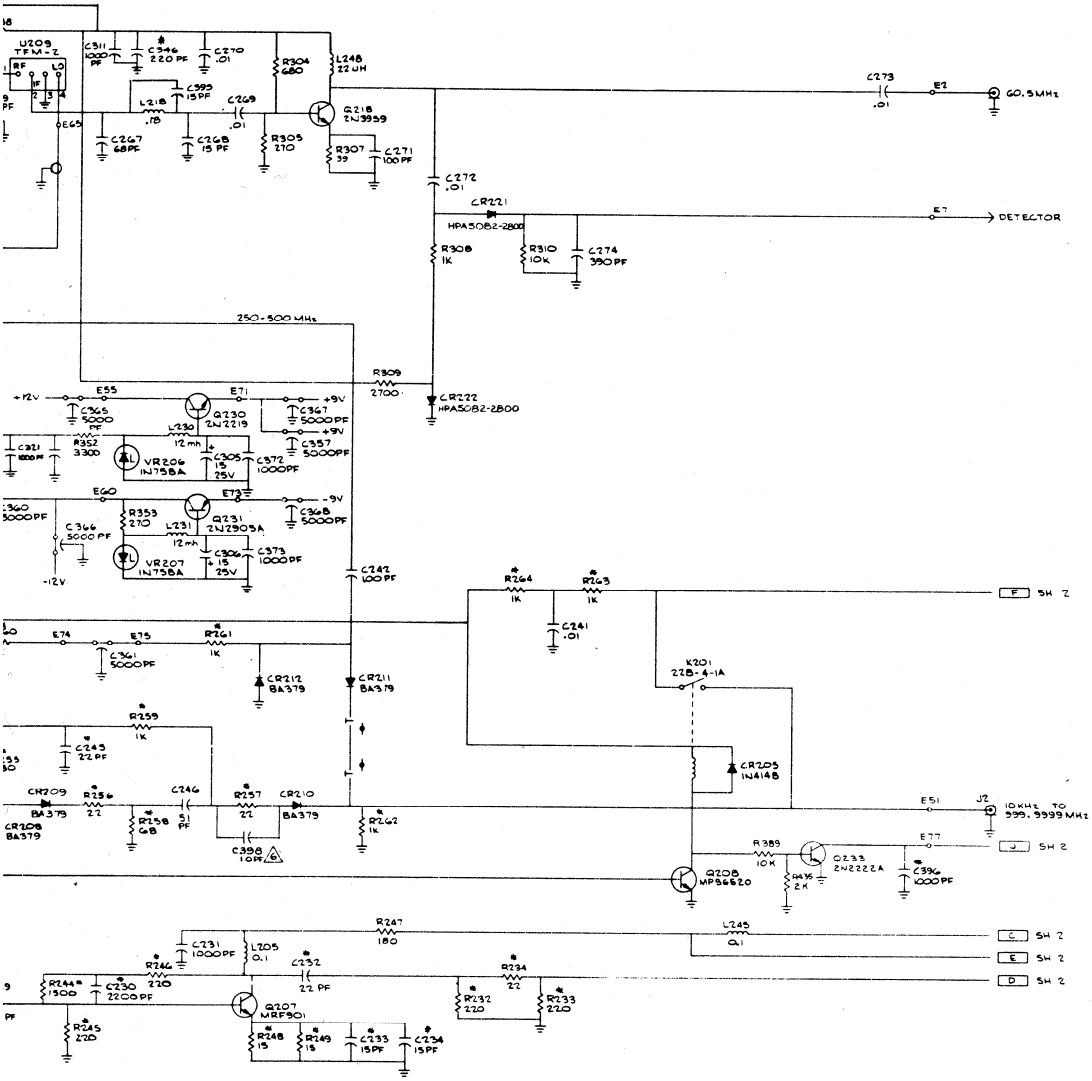

RF SYNTHESIZER RF BOARD

*Motorola No. **PEPS-37065-O***
(Sheet 6 of 6)
8/12/83- PHI

RECEIVER BOARD (A06)

MODEL RTL4091A

1. DESCRIPTION

1.1 The receiver demodulates and processes the 10.7 MHz i-f output from the rf module to recovered AM and FM audio signals. The receiver consists of an i-f section, an audio section, a squelch section, frequency counter output circuit, and a microprocessor interface.

1.2 Input signals are subjected to filtering, amplification, limiting, detection, and AGC control. Primary outputs from the receiver board include calibrated audio levels corresponding to deviation and percent of amplitude modulation. A gated 10.7 MHz i-f signal is output to the counter circuits to determine frequency error. The amplifiers in the i-f section are AGC controlled to establish overload alarm signals. Squelch status is applied to the front panel for monitoring. All switching on the receiver is microprocessor-controlled via the data bus.

1.3 RF from the wideband amplifier is applied via coaxial cable to J1 on the receiver board. The recovered audio is applied to the output via the main interconnect board.

2. THEORY OF OPERATION

2.1 I-F SECTION

2.1.1 General

The i-f section consists of an AGC controlled amplifier, AGC circuit, AM i-f and detector circuit, FM i-f and quadrature detector circuit, and bandpass filtering. The output from the rf module is connected via coaxial cable to J1. Amplifier U1 is an AGC controlled input amplifier that is matched to the narrow bandpass and wide bandpass filter. U1 gain is determined by the output of U6A. Narrowband or wideband filtering is selected by the i-f bandwidth control lines. The FM i-f signal is sent to the FM i-f circuit and quadrature detector U2 where it is converted into audio.

2.1.2 AGC Controlled Amplifier

I-F input amplifier U1 is an AGC controlled amplifier. The i-f cirucit is terminated through J1 by a 50 ohm load. The output of U1 is a 4000 ohm tuned circuit and matched filter.

2.1.3 AGC Circuit

The dc component of the composite AM signal is applied to amplifier U6A where it is amplified and sent to amplifier U1 as the AGC voltage. Feedback circuitry and filtering provide sufficient time for the AGC circuit to respond to changes in signal level inherent with AM signals.

2.1.4 AM I-F and Detector

AM i-f signals are routed through transistor circuits utilizing a high input impedance to avoid loading the i-f filter output. AM detection is accomplished by diode CR13 with the composite signal being developed across C48 and R54.

2.1.5 FM I-F and Quadrature Detector Circuit

The output of the i-f filter is applied to U2. The amplifier combines both amplifier, limiter, and quadrature detector on a single integrated circuit. The tuned network from pin 8 to pin 10 supplies a quadrature i-f signal. The i-f signal and quadrature component are applied to the internal detector of U2. The audio output is sent to audio amplifier U8B.

2.2 AUDIO/SQUELCH SECTION

Composite AM from the AM detector is sent through a 7 kHz low-pass filter prior to being amplified by U9B. The AM audio signal is applied to amplifier U5A where it is amplified and applied to the percent modulation output. AM audio is also applied to gate U7C and is routed through the active filter U12B. If FM select is active, the FM audio signal from amplifiers

U8B and U9A is routed through squelch gate U7C and U7D to the active filter.

2.3 AUDIO/COUNTER SECTION

The audio section consists of an audio inverter and an audio output amplifier. Audio is inverted by U12A. Switching for inversion is determined by U10A, U10B, and U10C. Audio is buffered by transistors Q8 and Q9 before being applied to the output as recovered audio. The i-f signal from amplifier Q7 is buffered by transistor Q10 before being routed off the board as a 10.7 MHz signal. U6B and U16A determine at what input level the 10.7 MHz output is to be enabled. Transistor Q11 enables CR18 to open the 10.7 MHz output line. AGC output from amplifier U6A is inverted by U4A. Squelch comparator U4B applies the squelch gate signal and the signal level voltage to light the front panel indicator.

2.4 INTERFACE SECTION

The interface section consists of an address decoder, data latch, and i-f bandwidth control line switch. The address decoder receives address input on AØ through A3 address lines and applies a data strobe to data latch U14. The data strobe gates data from data lines DØ through D3 into U14 to generate AM/FM select, audio invert, and i-f bandwidth gain signals. The i-f bandwidth control line switch applies narrow band or wideband select signals to the i-f input audio amplifier and filter circuit.

parts list

RTL4091A Receiver Board — PL-8442-O

REFERENCE SYMBOL	MOTOROLA PART NO.	DESCRIPTION
		capacitor, fixed uF; ± 5%; 500 V: unless otherwise stated
C1 thru 7	21-83596E21	.01 + 80-20%; 200 V
C8	21-83406D81	20 pF ± 5%
C9 thru 12		NOT USED
C13	21-83406D89	10 pF ± 0.5 pF
C14	21-83406D93	16 pF ± 5%
C15		NOT USED
C16, 17, 18	21-83596E21	.01 + 80-20%; 200 V
C19	21-83406D55	18 pF ± 5%
C20	21-83596E21	.01 + 80-20%; 200 V
C21	21-83406D89	10 pF ± 0.5 pF; 500 V
C22, 23	21-83596E21	.01 + 80-20%; 200 V
C24, 25	21-82372C07	.05 + 80-0%; 25 V
C26	23-84665F26	100 ± 20%; 16 V
C27	21-83596E21	.01 + 80-20%; 200 V
C28	23-84665F26	100 ± 20%; 16 V
C29	21-82372C07	.05 + 80-0%; 25 V
C30, 31, 32	21-83596E21	.01 + 80-20%; 200 V
C33	21-850118	100 pF sil mica; 300 V
C34	23-84665F26	100 ± 20%; 16 V
C35, 36	21-840895	27 pF ± 5%; 300 V
C37 thru 43	21-83596E21	.01 + 80-20%; 200 V
C44	20-82399D05	variable; 9-35 pF
C45, 46, 47	21-83596E21	.01 + 80-20%; 200 V
C48	21-84426B62	190 pF sil mica ± 3%; 300 V
C49	21-859944	300 pF sil mica ± 5%; 300 V
C50	23-84665F04	1 + 150-10%; 50 V
C51	23-84908L01	2.2 ± 20%; 50 V
C52, 53	21-83596E21	.01 + 80-20%; 200 V
C54	53-84908L01	2.2 ± 20%; 50 V
C55	8-82096J18	0.1 ± 10%; 250 V
C56		NOT USED
C57	21-84494B13	240 pF sil mica ± 5%; 300 V
C58		NOT USED
C59	21-84494B06	120 pF sil mica ± 5%; 300 V
C60 thru 68	21-83596E21	.01 + 80-20%; 200 V
C69, 70, 71	21-82372C07	.05 + 80-0%; 25 V
C72 thru 75	23-84665F01	10 + 100-10%; 25 V
C76, 77	21-83596E21	.01 + 80-20%; 200 V
C78, 79	23-84665F01	10 + 100-10%; 25 V
C80	21-83596E21	.01 + 80-20%; 200 V
C81	21-83406D86	47 pF ± 5%; 300 V
C82	20-82399D05	variable; 9-35 pF
		diode: (see note 1)
CR1	48-83654H01	silicon
CR2, 3, 4		NOT USED
CR5	48-83654H01	silicon
CR6		NOT USED
CR7, 8	48-83654H01	silicon
CR9, 10	48-83654H01	silicon
CR11		NOT USED
CR12 thru 20	48-83654H01	silicon
		connector, receptacle:
J1	9-83250M01	female; single contact (phono)
		coil, rf:
L1	24-84250D01	choke; 15 uH ± 5%
L2	24-82549D25	choke; 10 uH ± 5%
L3	24-82549D36	choke; 4.7 uH ± 10%
L4	24-84250D01	choke; 15 uH ± 5%
L5	24-82549D25	choke; 10 uH ± 5%
L6	24-82549D36	choke; 4.7 uH ± 10%
L7	24-82723H03	choke; 23 uH ± 10%
L8	24-83541L02	discriminator coil
L9, 10	24-82549D28	choke; 10 uH ± 20%
L11	24-84250D01	choke; 15 uH ± 5%
		transistor: (see note 1)
Q1 thru 4	48-869570	NPN; type M9570
Q5	48-869940	field-effect; type M9940
Q6, 7, 8	48-869570	NPN; type M9570
Q9	48-869571	PNP; type M9571
Q10	48-869940	field-effect; type M9940
Q11	48-869570	NPN; type M9570
		resistor, fixed; ± 5%; 1/4 W: unless otherwise stated
R1	6-124A18	51
R2, 3	6-124A66	5.1k
R4	6-124A05	15
R5 thru 9		NOT USED
R10	6-124A55	1.8k
R11	6-124A45	680
R12		NOT USED
R13	6-124A09	22
R14, 15	6-124A97	100k
R16	6-124A85	33k
R17	6-124A07	18
R18	6-124A77	15k
R19	6-124A13	33
R20	6-124A67	5.6k
R21	6-124A70	7.5k
R22	6-124A35	270
R23		NOT USED
R24, 25	6-124A97	100k
R26, 27, 28, 29	6-124B02	150k
R30	6-124A45	680
R31	6-124A69	6.8k
R32	6-124A73	10k
R33	6-124A47	820
R34	6-124A89	47k
R35, 36, 37	6-124A83	27k
R38	6-124A86	36k
R39	6-124A83	27k
R40	6-124A86	36k
R41	6-124A97	100k
R42	6-124A37	330
R43	6-124A73	10k
R44	6-124A71	8.2k
R45	6-124A51	1.2k
R46	6-124A78	16k
R47	6-124A59	2.7k
R48	6-124A49	1k
R49	6-124A31	180
R50	6-124A01	10
R51	6-124A73	10k
R52*	6-124A72	9.1k (note 2)
R53	6-124A01	10
R54	6-124A77	15k
R55	6-124A94	75k
R56	6-124B14	470k
R57	6-124A81	22k
R58	6-124A97	100k
R59	18-83452F14	variable; 10k
R60	6-124A49	1k
R61	6-124A09	22
R62	6-124A61	3.3k
R63 thru 65		NOT USED
R66	6-124A82	24k
R67	6-124A90	51k
R68	6-124A81	22k
R69	6-124A93	68k
R70	18-83452F14	variable; 10k
R71	6-124A63	3.9k
R72	6-124B06	220k
R73, 74	6-124A73	10k
R75	18-83452F18	variable; 50k
R76*	6-124A87	39k (note 2)
R77	18-83452F17	variable; 50k
R78*	6-124A98	110k (note 2)
R79, 80		NOT USED
R81, 82	6-124A75	12k
R83	6-124A89	47k
R84	6-124A88	43k
R85	6-124A25	100
R86, 87	6-124A72	9.1k
R88	6-124A25	100
R89	6-124A09	22
R90	6-124A93	68k
R91	6-124A37	330
R92	6-124A01	10
R93	6-124A77	15k
R94	6-124A45	680
R95	6-124A89	47k
R96	6-124A59	2.7k
R97	6-124B14	470k
R98	6-124A44	620
R99	6-124A97	100k
R100	6-124A57	2.2k
R101, 102	6-124B06	220k
R103, 104	18-83452F13	variable; 10k
R105, 106	6-124A77	15k
R107	6-124B02	150k
R108 thru 112	6-124A71	8.2k
R113, 114	6-124A67	5.6k
R115, 116	6-124A01	10
		integrated circuit: (see note 1)
U1	51-80066C01	i-f amplifier
U2	51-84561L84	quad detector
U3	51-82884L48	quad bilateral switch
U4	51-84371K63	dual operational amplifier
U5, 6	51-80365A07	dual operational amplifier
U7	51-82884L48	quad bilateral switch
U8, 9	51-80365A07	dual operational amplifier
U10	51-82884L48	quad bilateral switch
U11		NOT USED
U12	51-80365A07	dual operational amplifier
U13		NOT USED
U14	51-82884L15	quad clocked D-latch
U15, 16	51-84371K74	quad comparator
U17	51-84561L42	dual 1 of 4 decoder/demultiplexer
		voltage regulator: (see note 1)
VR1, 2	48-82256C46	Zener type; ± 5%; 3.9 V

REFE SYI
Y1
Y2

notes:

1. For o order
2. R52, R5: R7(R7(

REFERENCE SYMBOL	MOTOROLA PART NO.	DESCRIPTION
R23		NOT USED
R24, 25	6-124A97	100k
R26, 27, 28, 29	6-124B02	150k
R30	6-124A45	680
R31	6-124A69	6.8k
R32	6-124A73	10k
R33	6-124A47	820
R34	6-124A89	47k
R35, 36, 37	6-124A83	27k
R38	6-124A86	36k
R39	6-124A83	27k
R40	6-124A86	36k
R41	6-124A97	100k
R42	6-124A37	330
R43	6-124A73	10k
R44	6-124A71	8.2k
R45	6-124A51	1.2k
R46	6-124A78	16k
R47	6-124A59	2.7k
R48	6-124A49	1k
R49	6-124A31	180
R50	6-124A01	10
R51	6-124A73	10k
R52*	6-124A72	9.1k (note 2)
R53	6-124A01	10
R54	6-124A77	15k
R55	6-124A94	75k
R56	6-124B14	470k
R57	6-124A81	22k
R58	6-124A97	100k
R59	18-83452F14	variable; 10k
R60	6-124A49	1k
R61	6-124A09	22
R62	6-124A61	3.3k
R63 thru 65		NOT USED
R66	6-124A82	24k
R67	6-124A90	51k
R68	6-124A81	22k
R69	6-124A93	68k
R70	18-83452F14	variable; 10k
R71	6-124A63	3.9k
R72	6-124B06	220k
R73, 74	6-124A73	10k
R75	18-83452F18	variable; 50k
R76*	6-124A87	39k (note 2)
R77	18-83452F17	variable; 50k
R78*	6-124A98	110k (note 2)
R79, 80		NOT USED
R81, 82	6-124A75	12k
R83	6-124A89	47k
R84	6-124A88	43k
R85	6-124A25	100
R86, 87	6-124A72	9.1k
R88	6-124A25	100
R89	6-124A09	22
R90	6-124A93	68k
R91	6-124A37	330
R92	6-124A01	10
R93	6-124A77	15k
R94	6-124A45	680
R95	6-124A89	47k
R96	6-124A59	2.7k
R97	6-124B14	470k
R98	6-124A44	620
R99	6-124A97	100k
R100	6-124A57	2.2k
R101, 102	6-124B06	220k
R103, 104	18-83452F13	variable; 10k
R105, 106	6-124A77	15k
R107	6-124B02	150k
R108 thru 112	6-124A71	8.2k
R113, 114	6-124A67	5.6k
R115, 116	6-124A01	10
		integrated circuit: (see note 1)
U1	51-80066C01	i-f amplifier
U2	51-84561L84	quad detector
U3	51-82884L48	quad bilateral switch
U4	51-84371K63	dual operational amplifier
U5, 6	51-80365A07	dual operational amplifier
U7	51-82884L48	quad bilateral switch
U8, 9	51-80365A07	dual operational amplifier
U10	51-82884L48	quad bilateral switch
U11		NOT USED
U12	51-80365A07	dual operational amplifier
U13		NOT USED
U14	51-82884L15	quad clocked D-latch
U15, 16	51-84371K74	quad comparator
U17	51-84561L42	dual 1 of 4 decoder/demultiplexer
		voltage regulator: (see note 1)
VR1, 2	48-82256C46	Zener type; ± 5%; 3.9 V

REFERENCE SYMBOL	MOTOROLA PART NO.	DESCRIPTION
		crystal: (see note 1)
Y1	91-80377A94	ceramic filter
Y2	91-80397A29	crystal filter
		mechanical parts
	3-139012	SCREW, machine; 4-40 × 1/4"; 7 used
	14-84602K02	INSULATOR
	26-80378A52	SHIELD
	45-80395A40	ACTUATOR, ejector; 2 used

notes:

1. For optimum performance, diodes, transistors, and integrated circuits must be ordered by Motorola part numbers.

2. R52, R76 and R78 may be selected at the factory from the values indicated.

R52*	6-124A72	9.1k
	6-124A74	11k
	6-124A75	12k
R76*	6-124A85	33k
	6-124A87	39k
	6-124A89	47k
R78*	6-124A96	91k
	6-124A98	110k
	6-124B01	130k
	6-124B02	150k

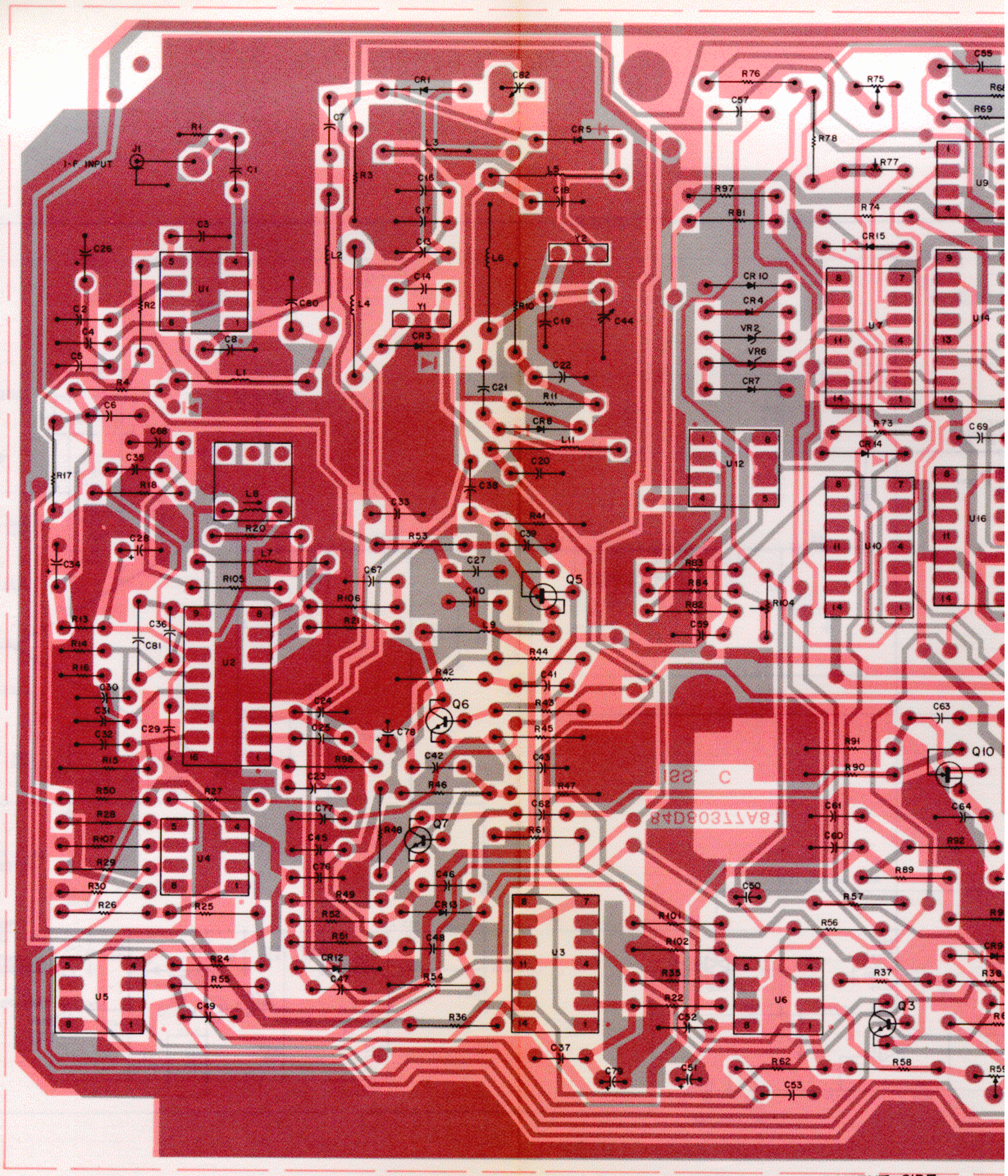

SHOWN FROM COMPONENT SIDE

RECEIVER BOARD (A06)

MODEL RTL4091A
SCHEMATIC DIAGRAM, CIRCUIT
BOARD DETAIL, AND PARTS LIST

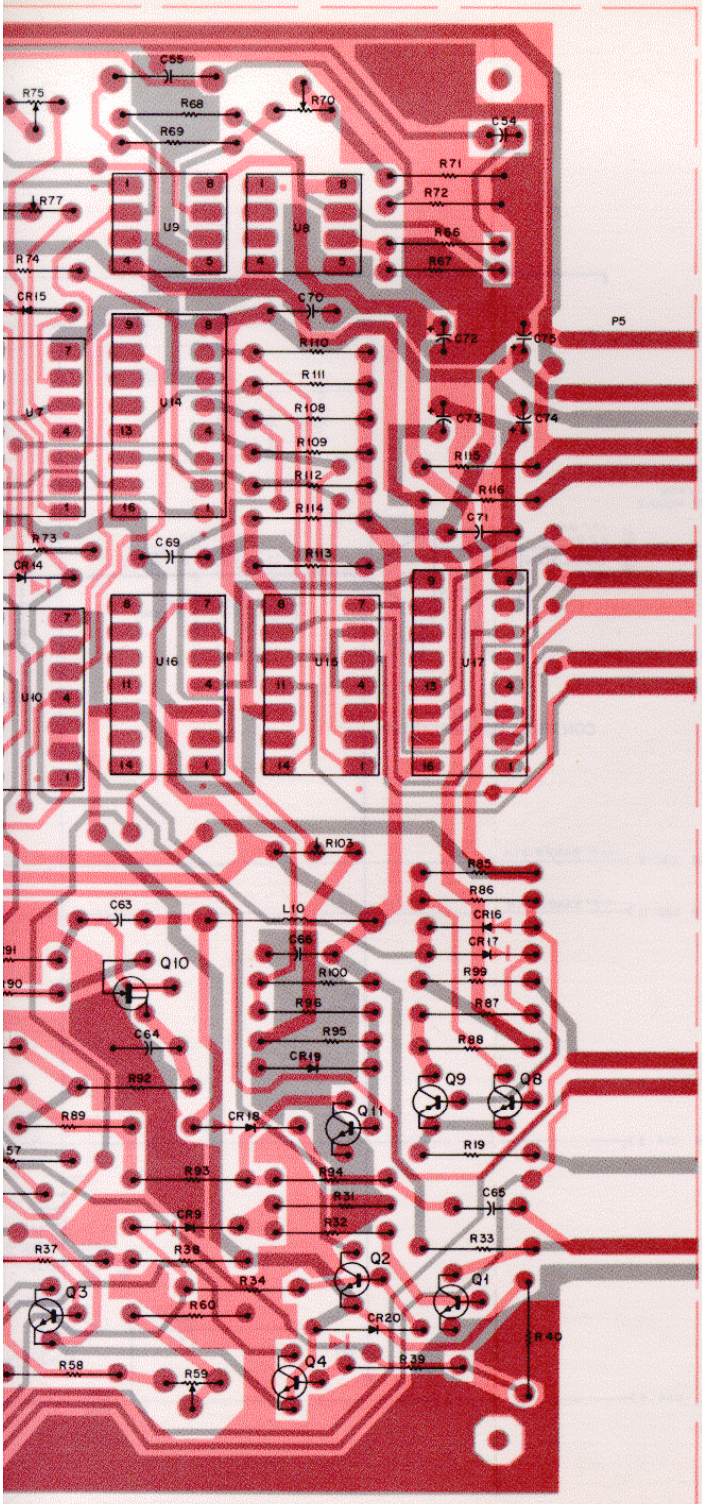

71 (72) GND (GND)

67 (68) +5V (+5V)

65 - 5V

63 (64) +12V (+12V)

61 (62) -12V (-12V)

55 (56) A0 (A1)

53 (54) A2 (A3)

(52) (STB1)

47 (48) D0 (D1)

45 (46) D2 (D3)

17 (18) SQ. POT. 1 (SQ. POT. 2)

15 (16) PCT AM (AGC)

9 REC AUD

3 (4) SQ. IND (10.7 MHZ)

1 (2) GND (GND)

NOTE: PIN NUMBERS AND SIGNAL NAMES IN PARENTHESES, ( ), ARE ON SOLDER SIDE.

NENT SIDE

COMPONENT SIDE ● BD-EEPS-36200-O
SOLDER SIDE ● BD-EEPS-36199-O
OL-EEPS-36192-A

Motorola No. ***PEPS-36848-O***
(Sheet 1 of 5)
8/12/83- PHI

RECEIVER BOARD (A06)

MODEL RTL4091A
SCHEMATIC DIAGRAM, CIRCUIT
BOARD DETAIL, AND PARTS LIST

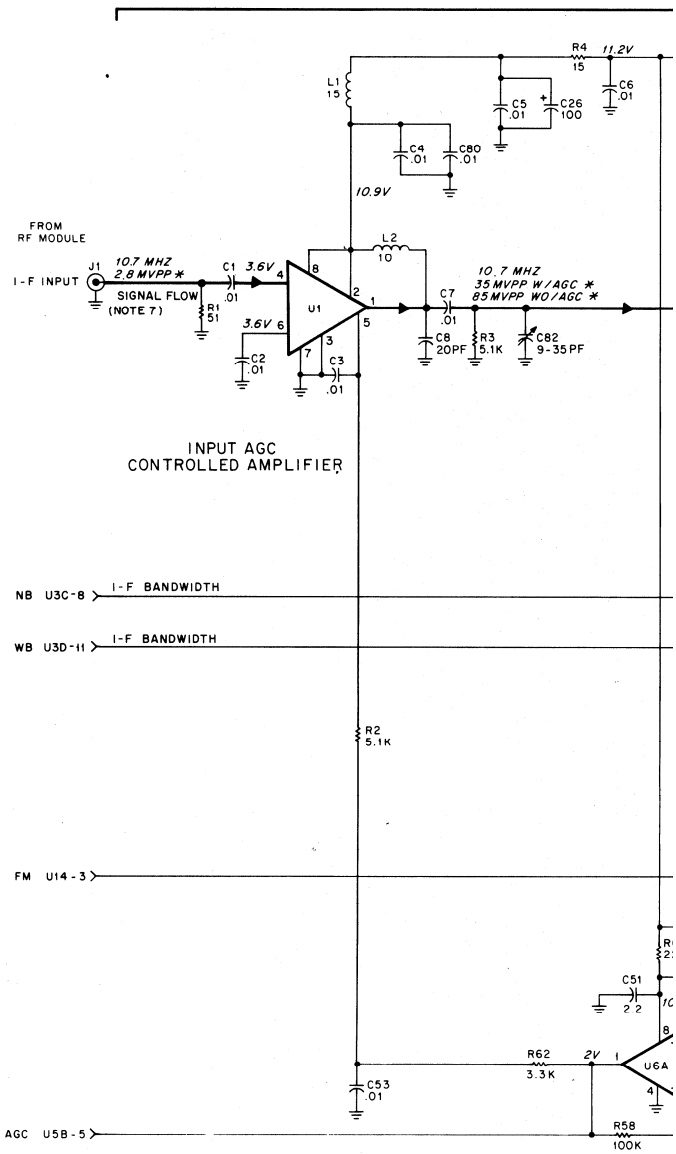

Motorola No. ***PEPS-36848-O***
(Sheet 2 of 5)
8/12/83- PHI

I-F SECTION

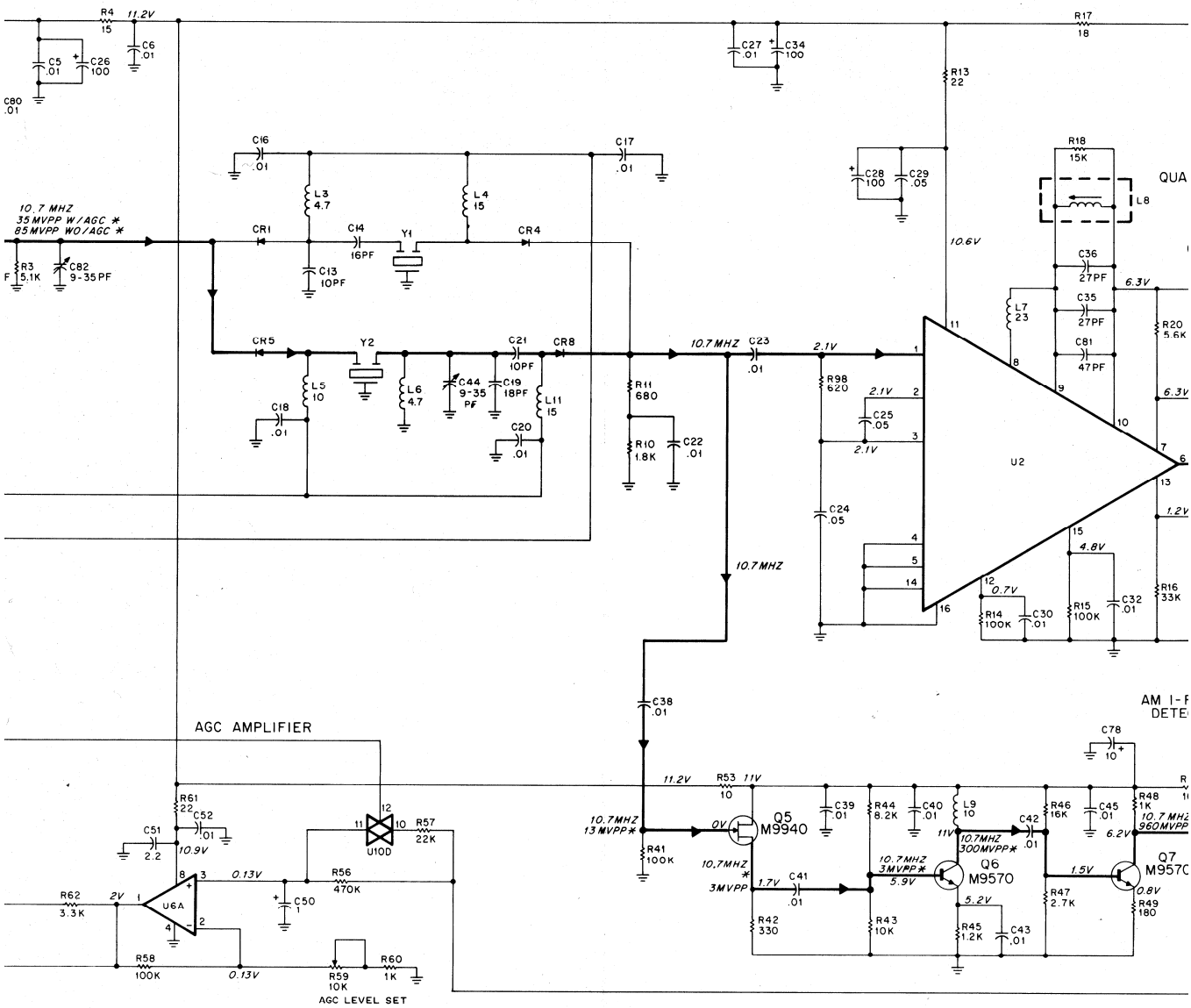
R4 15
11.2V
C5 .01
C26 100
C6 .01
C80 .01
C27 .01
C34 100
R17 18
R13 22
C16 .01
C17 .01
L3 4.7
L4 15
C28 100
C29 .05
R18 15K
L8
QUA
10.7 MHZ
35 MVPP W/AGC *
85 MVPP WO/AGC *
CR1
C14 16PF
Y1
CR4
C13 10PF
10.6V
C36 27PF
6.3V
R3 5.1K
C82 9-35PF
C35 27PF
L7 23
R20 5.6K
CR5
Y2
C21 10PF
CR8
10.7MHZ
C23 .01
2.1V
C81 47PF
L5 10
L6 4.7
C44 9-35 PF
C19 18PF
L11 15
R11 680
R98 620
C18 .01
C20 .01
R10 1.8K
C22 .01
C25 .05
U2
C24 .05
1.2V
4.8V
10.7MHZ
0.7V
R14 100K
C30 .01
R15 100K
C32 .01
R16 33K
C38 .01
AM I-F
DETE
AGC AMPLIFIER
C78 10
11.2V
R53 10
11V
R61 22
C52 .01
U10D
R57 22K
C51 2.2
10.9V
10.7MHZ 13MVPP*
0V
Q5 M9940
C39 .01
R44 8.2K
C40 .01
L9 10
C42 .01
R46 16K
C45 .01
R48 1K
10.7 MHZ 960MVPP
R62 3.3K
2V
U6A
0.13V
R56 470K
C50 1
R41 100K
10.7MHZ * 3MVPP
1.7V
C41 .01
10.7MHZ 3MVPP*
5.9V
10.7MHZ 300MVPP*
Q6 M9570
6.2V
1.5V
Q7 M957C
0.8V
R42 330
R43 10K
5.2V
R45 1.2K
C43 .01
R47 2.7K
R49 180
R58 100K
0.13V
R59 10K
R60 1K
AGC LEVEL SET

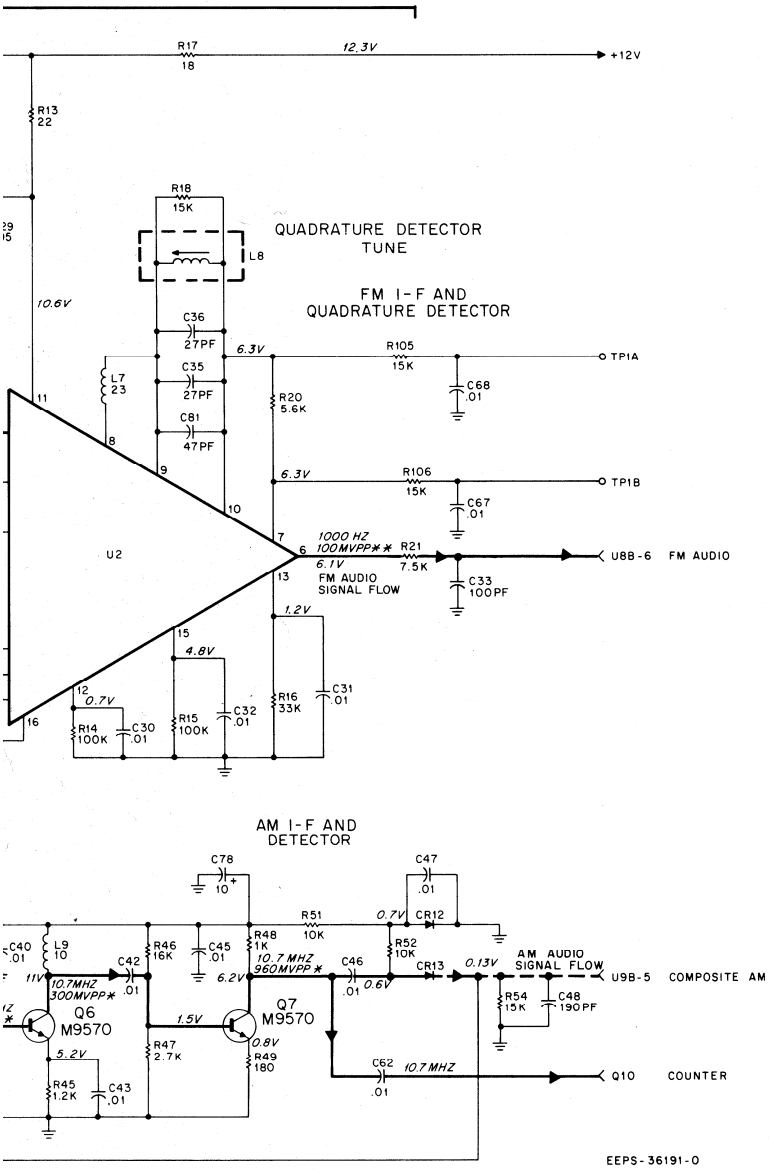

EEPS-36191-0
(SHEET 1 OF 4)

NOTES:

1. Unless otherwise indicated: resistor values are ohms; capaciti microfarads; and inductor values are in microhenries.
2. **DC voltages are measured with no i-f input, FM operating moc i-f, and normal audio-squelch open.
3. *10.7 MHz PP voltages are measured at – 47.0 dBm input, narro
4. **Audio voltages are measured at – 47.0 dBm input, narrow b audio, 5.00 kHz deviation, 1000 Hz modulating signal.
5. Integrated circuits on this board are TTL and CMOS devices.
6. IC types and connections for this board are as follows:
7. 10.7 MHz signal flow shown for narrow band I-F.

Reference Designation	Mfgr's Description	+5 V	–
U1	I-F Amp	—	
U2	Quad Detector	—	
U3	Quad Bi-Lat SW	—	
U4	Dual Op Amp	—	
U5	Dual Op Amp	—	
U6	Dual Op Amp	—	
U7	Quad Bi-Lat SW	14	
U8	Dual Op Amp	—	
U9	Dual Op Amp	—	
U10	Quad Bi-Lat SW	14	
U12	Dual Op Amp	—	
U14	Quad Clk D-Latch	16	6
U15	Quad Comparator	3	
U16	Quad Comparator	3	
U17	Dual 1-4 Decode/Demux	16	

8. Logic states shown are for FM, narrow band I-F, normal audio.

NOTES:

1. Unless otherwise indicated: resistor values are ohms; capacitor values are in microfarads; and inductor values are in microhenries.

2. **DC voltages are measured with no i-f input, FM operating mode, narrow band i-f, and normal audio-squelch open.

3. *10.7 MHz PP voltages are measured at − 47.0 dBm input, narrow band FM

4. **Audio voltages are measured at − 47.0 dBm input, narrow band FM, normal audio, 5.00 kHz deviation, 1000 Hz modulating signal.

5. Integrated circuits on this board are TTL and CMOS devices.

6. IC types and connections for this board are as follows:

7. 10.7 MHz signal flow shown for narrow band I-F.

Reference Designation	Mfgr's Description	+5 V	−5 V	+12 V	−12 V	Unused	Gnd
U1	I-F Amp	—	—	2, 8	—	—	3, 7
U2	Quad Detector	—	—	11	—	—	4, 5, 14, 16
U3	Quad Bi-Lat SW	—	7	14	—	—	—
U4	Dual Op Amp	—	—	8	4	—	3
U5	Dual Op Amp	—	—	8	4	—	—
U6	Dual Op Amp	—	—	8	—	—	4
U7	Quad Bi-Lat SW	14	7	—	—	—	—
U8	Dual Op Amp	—	—	8	4	1, 2, 3	5
U9	Dual Op Amp	—	—	8	4	—	—
U10	Quad Bi-Lat SW	14	7	—	—	—	—
U12	Dual Op Amp	—	—	8	4	—	3
U14	Quad Clk D-Latch	16	6, 8	—	—	11, 12	—
U15	Quad Comparator	3	12	—	—	—	—
U16	Quad Comparator	3	12	—	—	8, 9, 10, 11, 13, 14	—
U17	Dual 1-4 Decode/Demux	16	—	—	—	4, 5, 7, 10, 11, 12	—

8. Logic states shown are for FM, narrow band I-F, normal audio.

AUDIO / SQUELCH SECTION

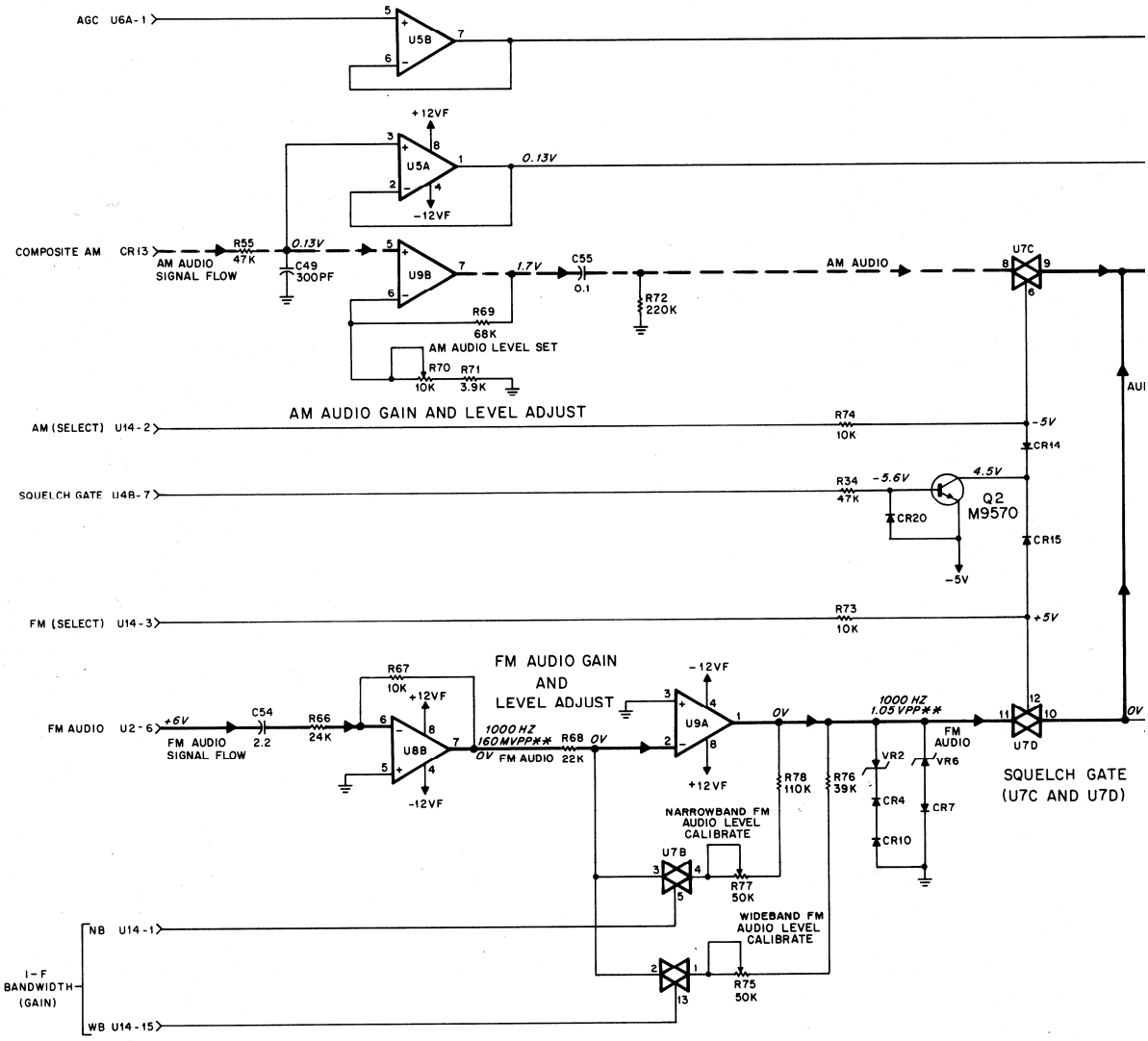

RECEIVER BOARD (A06)

MODEL RTL4091A
SCHEMATIC DIAGRAM, CIRCUIT
BOARD DETAIL, AND PARTS LIST

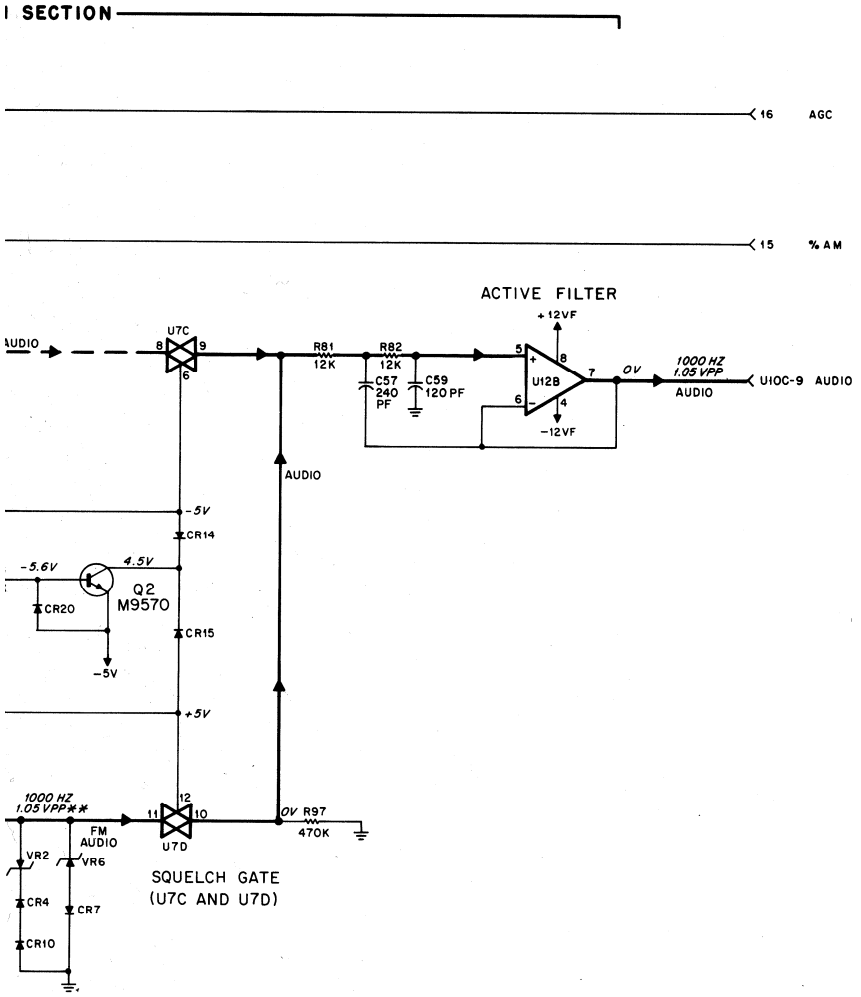

DEPS-36191-O
(SHEET 2 OF 4)

RECEIVER BOARD

Motorola No. ***PEPS-36848-O***
(Sheet 3 of 5)
8/12/83- PHI

RECEIVER BOARD (A06)

MODEL RTL4091A
SCHEMATIC DIAGRAM, CIRCUIT
BOARD DETAIL, AND PARTS LIST

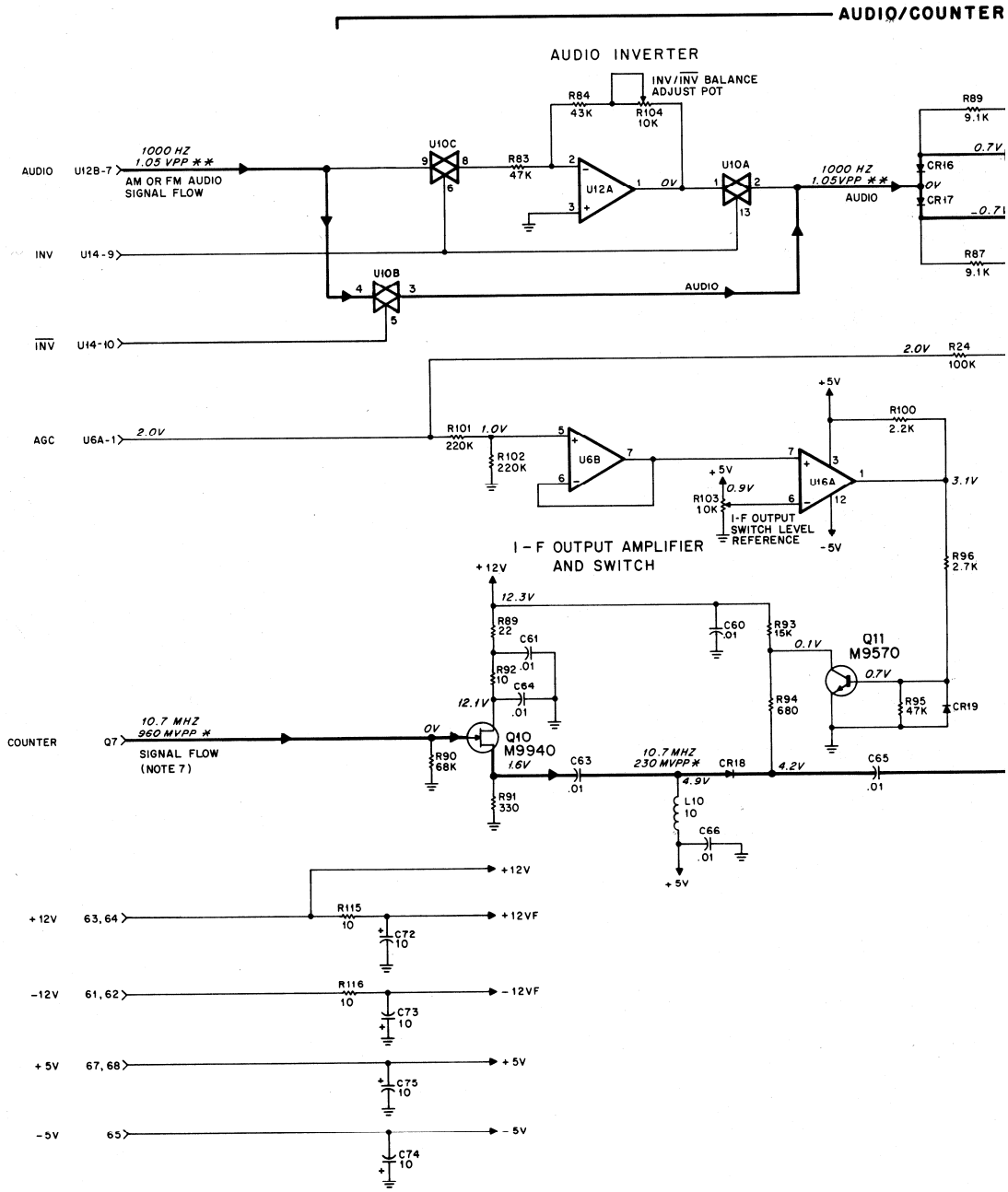

Motorola No. ***PEPS-36848-O***
(Sheet 4 of 5)
8/12/83-PHI

UDIO/COUNTER SECTION

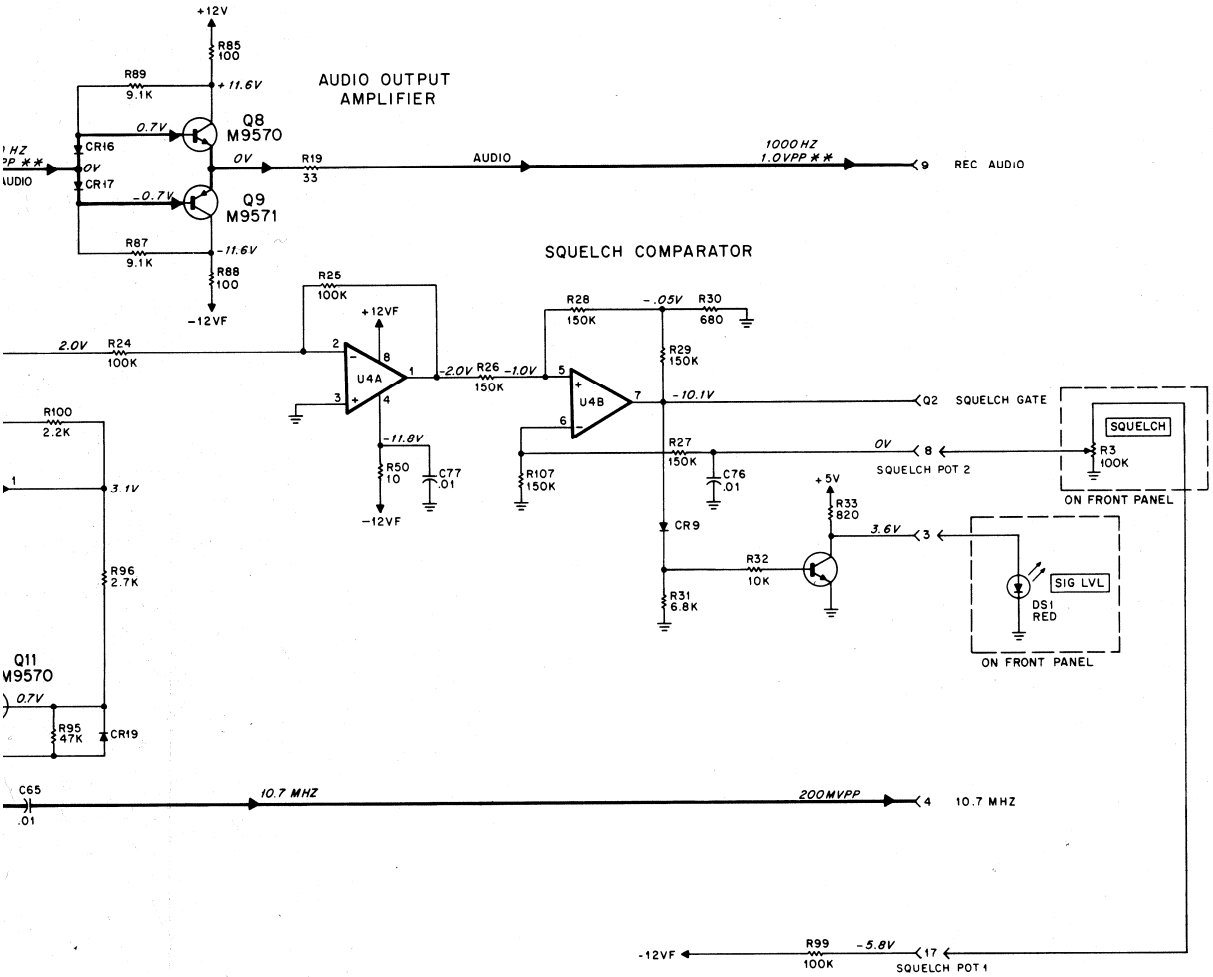

DEPS-36191-0
(SHEET 3 OF 4)

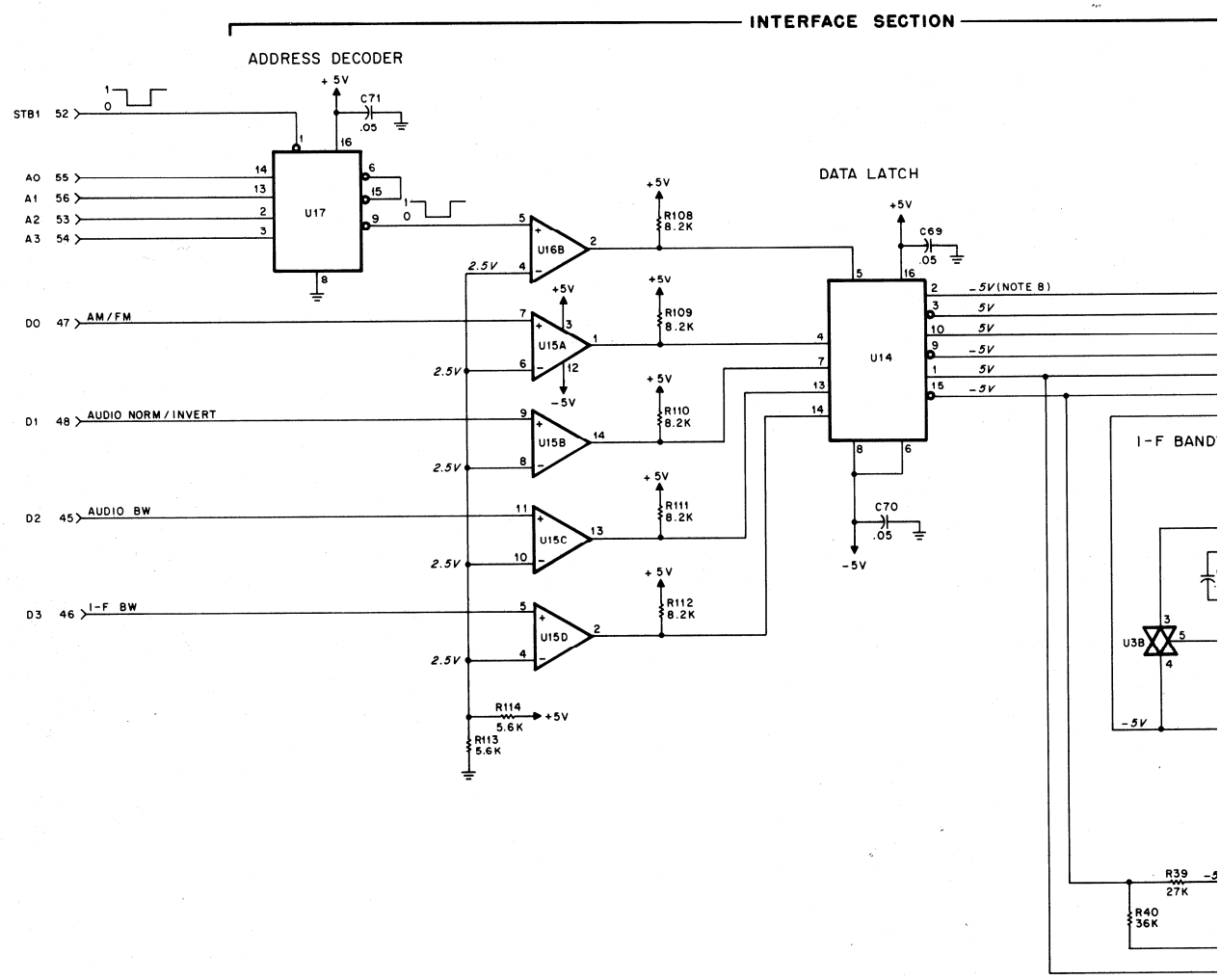
INTERFACE SECTION
ADDRESS DECODER
DATA LATCH
STB1 52
A0 55
A1 56
A2 53
A3 54
D0 47 AM/FM
D1 48 AUDIO NORM/INVERT
D2 45 AUDIO BW
D3 46 I-F BW
U17
U16B
U15A
U15B
U15C
U15D
U14
U3B
I-F BAND
+5V
-5V
2.5V
C71 .05
C69 .05
C70 .05
R108 8.2K
R109 8.2K
R110 8.2K
R111 8.2K
R112 8.2K
R114 5.6K
R113 5.6K
R39 27K
R40 36K
-5V (NOTE 8)
5V

RECEIVER BOARD (A06)

MODEL RTL4091A
SCHEMATIC DIAGRAM, CIRCUIT
BOARD DETAIL, AND PARTS LIST

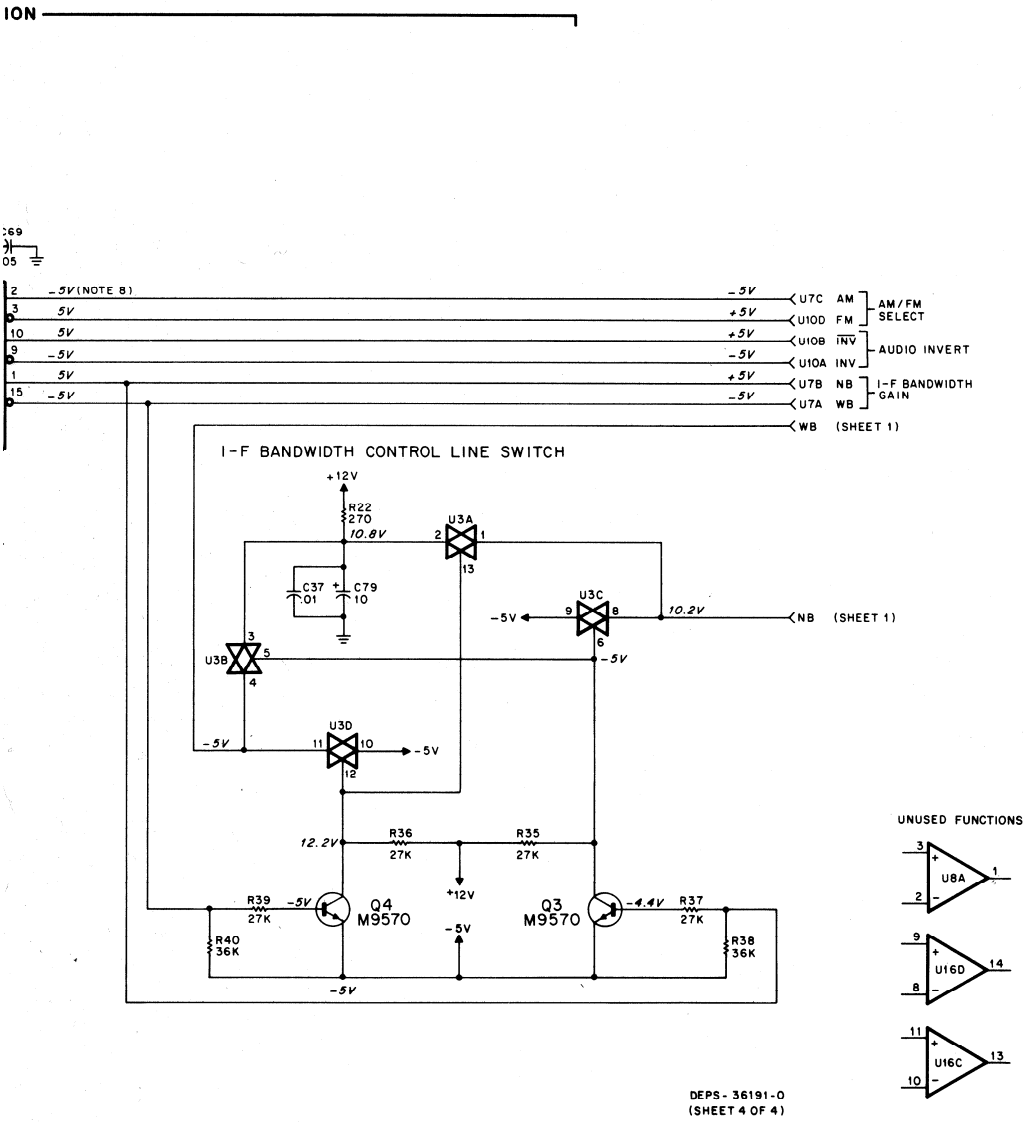

RECEIVER BOARD

Motorola No. ***PEPS-36848-O***
(Sheet 5 of 5)
8/12/83- PHI