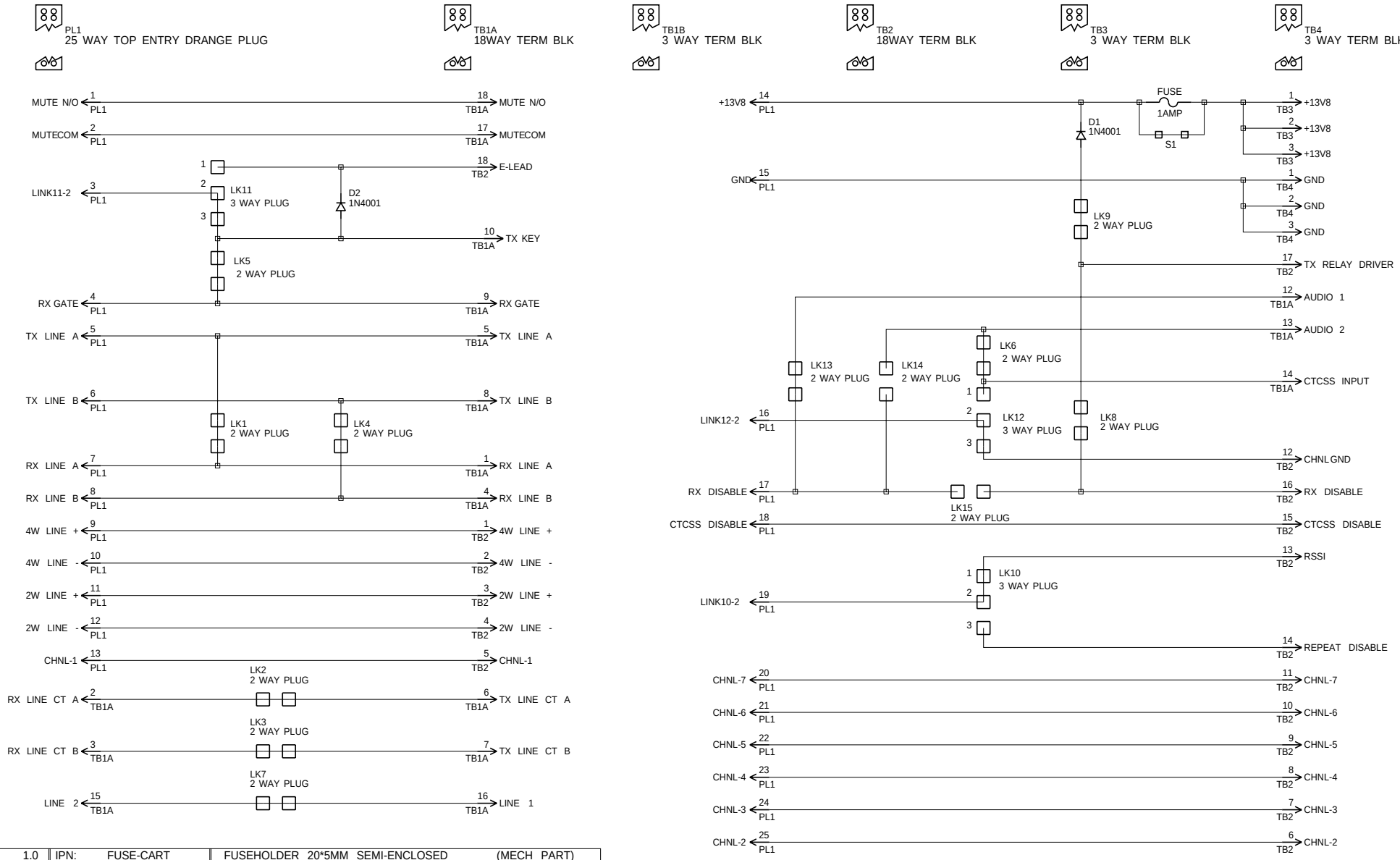

QTY: 1.0	IPN: FUSE-CART	FUSEHOLDER 20*5MM SEMI-ENCLOSED	(MECH PART)
QTY: 13.0	IPN: SHORTING LINK	SHORTING LINK FOR 0.1" SPACED PINS	(MECH PART)

P1	PROTOTYPE	M.HALL	D.S.	M.HALL	D.S.	04/06/96
REV/ISS	AMENDMENTS	DRAWN	CHKD	D.O.	APVD	DATE

© TAIT ELECTRONICS

T800-21
T800-21 RACKFRAME INTERFACE

IPN:	ISSUE:	ID:
220-01375-00	P2	2.SC. 1

PROJECT:	DESIGNER:	FILE NAME:	FILE DATE:	NO.SHEETS:
T800-21	D.S.	T800-21	24/07/96	1