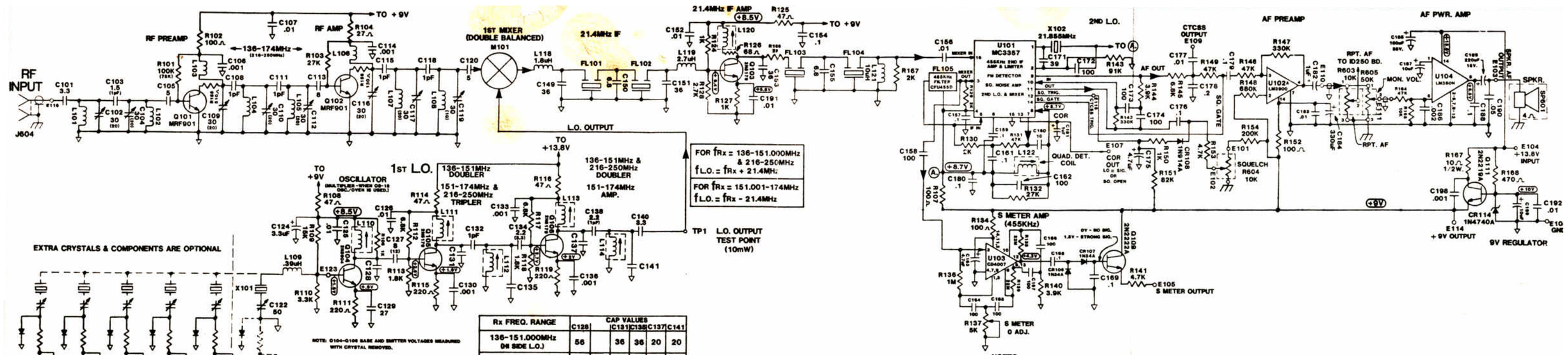

Rx FREQ. RANGE	C128	CAP VALUES C131	C135	C137	C141
136-151.000MHz (HI SIDE L.O.)	56	36	36	20	20
151.001-174MHz (LOW SIDE L.O.)	47	12	10	39	39
216-250MHz (HI SIDE L.O.)	39	10	12	6.8	6.8

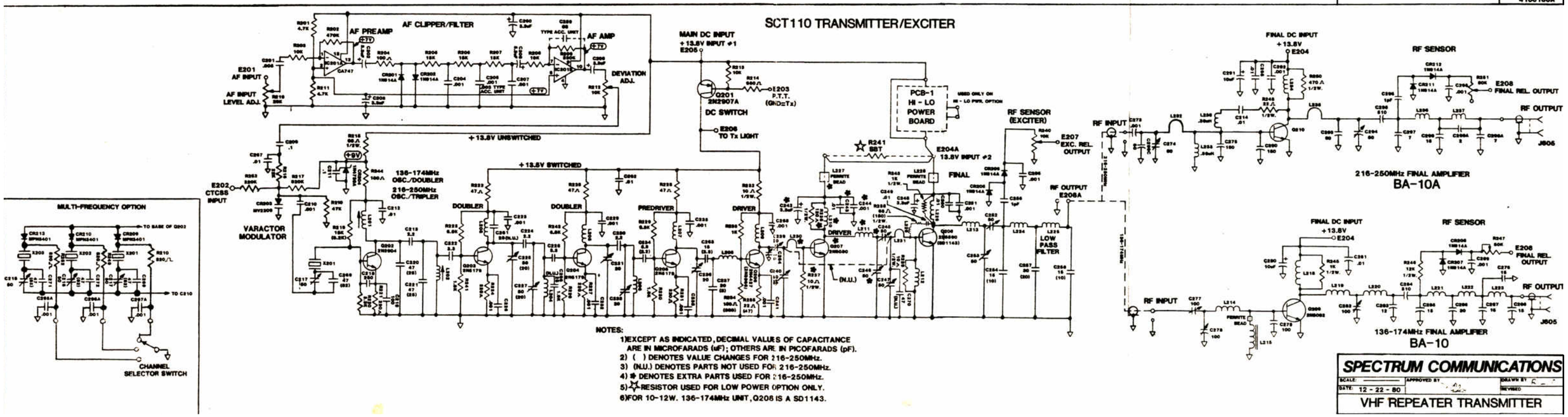

SCR1000 Repeater	
WB5HVH	5/18/2016