MOTOROLA

MT500 SERIES
CONVERTA-COM
Mobile Radio Console
N1248A

THIS MANUAL HAS BEEN
DISCONTINUED

Instruction Manual
68P81013C40-C

MOTOROLA

MT500 SERIES
CONVERTA-COM
Mobile Radio Console

CONTENTS

RELATED PUBLICATIONS AVAILABLE SEPARATELY

MT500 Theory/Maintenance Manual	68P81012C55
"Converta-Com" Operating Instructions	68P81013C35
Dynamic Microphone, Model TMN6054	68P81101E58
Reducing Noise Interference in Mobile Radios	68P81109E33

68P81013C40-C

LIST OF ILLUSTRATIONS

SPECIFICATIONS

DIMENSIONS:	11 × 3.83 × 5.9″ (28.0 × 9.7 × 15.0cm)	
NOMINAL INPUT VOLTAGE:	13.8Vdc negative (–) ground	
CURRENT DRAIN	**BATTERY CHARGED**	**BATTERY DISCHARGED**
STANDBY:	0.5A	1A
TRANSMIT:	1.0A	1A
RECEIVE:		
WITH ½W INTERNAL SPEAKER:	0.5A	1A
WITH ½W EXTERNAL SPEAKER:	0.5A	1A
WITH 12W EXTERNAL SPEAKER:	2.0A	3A
CHARGE RATE:	3 HOURS	
ANTENNA INPUT IMPEDANCE:	50Ω	
AUDIO OUTPUT: (at less than 5% distortion)	500mW WITH INTERNAL SPEAKER 500mW WITH EXTERNAL SPEAKER 12W WITH EXTERNAL SPEAKER/AMPLIFIER	
SPECIFICATIONS SUBJECT TO CHANGE WITHOUT NOTICE.		

MODEL/OPTION CHART

MODEL NUMBER														DESCRIPTION
N1248A														"CONVERTA-COM" MOBILE RADIO CONSOLE
	OPTIONS													**ADD TO MODEL NUMBER ABOVE**
		H132												½W MOBILE SPEAKER
			H133											12W MOBILE SPEAKER
				H116										LB BASE LOADED ANTENNA
					H109									VHF ¼-WAVE ROOF TOP ANTENNA
						H110								UHF 5dB GAIN ANTENNA
							H407							UNIT ID POCKET
								H754						"SYSTEMS 90" MOUNTING HARDWARE
									H755					SIDE-TONE SWITCHING
										H756				SIDE-TONE SWITCHING WITH TIME-OUT TIMER
											H901			TIME-OUT TIMER
												H323		HUMP MOUNT MOUNTING HARDWARE
													ITEM NO.	**DESCRIPTION**
X		O	O										NLN4470A	INTERNAL ½W AUDIO CONSOLE
		X											NLN4471A	EXTERNAL ½W AUDIO CONSOLE
			X										NLN4472A	EXTERNAL 12W AUDIO CONSOLE
							X						NLN4781A	EXTERNAL 12W AUDIO with UNIT ID POCKET CONSOLE
X													NKN6226A	CABLE KIT
X													TMN6054A	DYNAMIC MICROPHONE KIT
X													NLN4738A	DASH-MOUNT MOUNTING HARDWARE KIT
														OPTIONS
												X	NLN4739A	HUMP-MOUNT MOUNTING HARDWARE KIT
								X					NLN4473A	"SYSTEM 90" MOUNTING HARDWARE KIT
		X											NSN6029A	½W MOBILE SPEAKER
			X										NSN6027A	12W MOBILE SPEAKER
				X									TAB6102A	BASE LOADED ROOF TOP ANTENNA (30-36 MHz)
				X									TAB6103A	BASE LOADED ROOF TOP ANTENNA (36-42 MHz)
				X									TAB6104A	BASE LOADED ROOF TOP ANTENNA (42-50 MHz)
					X								TAD6111A	¼WAVE ROOF TOP ANTENNA (136-144 MHz)
					X								TAD6112A	¼WAVE ROOF TOP ANTENNA (144-152 MHz)
					X								TAD6113A	¼WAVE ROOF TOP ANTENNA (152-162 MHz)
					X								TAD6114A	¼WAVE ROOF TOP ANTENNA (162-174 MHz)
						X							TAE6061B	5dB GAIN ROOF TOP ANTENNA (406-430 MHz)
						X							TAE6062B	5dB GAIN ROOF TOP ANTENNA (450-470 MHz)
						X							TAE6063B	5dB GAIN ROOF TOP ANTENNA (430-450 MHz)
						X							TAE6064B	5dB GAIN ROOF TOP ANTENNA (470-494 MHz)
						X							TAE6065B	5dB GAIN ROOF TOP ANTENNA (494-512 MHz)
									X				NLN4729A	SIDE-TONE SWITCHING KIT
										X			NLN4731A	SIDE-TONE SWITCHING and TIME-OUT TIMER KIT
											X		NLN4730A	TIME-OUT TIMER KIT
									X	X	X		NLN4946A	SIDE-TONE and TIME-OUT TIMER HARDWARE KIT

EPF-11083-O

KEY: X = INCLUDED **O** = OMITTED

DESCRIPTION

1. GENERAL

The Motorola "Converta-Com" Mobile Radio Console adapts the MT500 "BBU" Series "Handie-Talkie" portable FM two-way radio for mobile (vehicular) operation. The console is available in the following basic configurations by adding or deleting options: internal ½W speaker, external ½W speaker, external 12W speaker/amplifier, external 12W speaker/amplifier for Unit ID. Refer to the Model/Option Chart for complete listings and information on available options and model configurations. When the portable radio is inserted into the console for vehicular operation, the following connections are implemented:

- The portable radio internal antenna is switched to operate from the vehicular (external) antenna.
- The console hand-held microphone is connected to the portable radio.
- The console battery charging circuits are connected to charge the portable radio internal battery whenever the vehicle ignition switch is on.
- The console transmit and charge indicator lamps are connected. However, the vehicle ignition switch must be on for the portable radio to transmit when in the console, and for the charging circuits to charge the portable radio internal battery.
- When an external ½W speaker is used, the console connects the portable radio receiver audio output to the external speaker. When an external 12W speaker/amplifier is installed, the console volume control is used instead of the portable radio volume control.
- The console night light is on when either the portable radio is on or the vehicle ignition switch is on.

When the portable radio is inserted in the console, the combined pair operates as a mobile two-way radio. Once set for mobile use, the portable volume control need not be reset when reinserting the portable radio when the 12W speaker/amplifier is used. The radio battery is automatically charged when in the console. A key lock is provided to prevent theft of the portable radio when the vehicle is left unattended. The key lock also acts as an eject button for easy removal of the radio. Mounting hardware is supplied with the console installation kit to facilitate dash or floor mounting of the console.

The weatherproof hand-held microphone is equipped with a push-to-talk switch, and has a coiled cord with a connector on one end for attaching to the rear of the console. Mounting hardware is supplied with the microphone.

2. MODEL VARIATIONS AND OPTIONS

a. General

Many options are available for the "Converta-Com" Console. Whenever options or circuit functions are added to the console, an additional printed circuit board may be required. This additional circuit board is easily installed within the console and is connected to the connector board.

b. Side-Tone Switching

The side-tone switching option enables the operator to monitor single-tone remote signaling or Unit ID tone transmissions on the 12W audio speaker/amplifier to let the operator know when voice message can start.

c. Time-Out Timer (T•O•T)

"Converta-Com" Consoles equipped with this option contain a special circuit which turns off the portable radio transmitter and emits an alert tone from the speaker when transmission time exceeds the predetermined time limit (approximately 50 seconds). Releasing the PTT switch resets the T•O•T, and the receiver operates normally without the alerting tone. Another transmission may be initiated immediately after releasing the PTT switch. This option alerts the operator if the transmitter is accidently keyed – preventing channel interference.

d. Time-Out Timer with Side-Tone Switching

"Converta-Com" Consoles equipped with this option operate in the same manner as described for the side-tone switching option and the time-out timer option.

e. Internal ½W Speaker (NLN4470A Console)

The NLN4470A Console is the basic -internal speaker- "Converta-Com" Console. It consists primarily of a housing, a connector board, a charger board, and an external hand-held microphone. The console housing (bottom) has "grille-like" perforations for receiver speaker audio outlet. Internal speaker audio output is rated at ½W.

f. External ½W Speaker Option (NLN4471A Console)

The NLN4471A Console is equipped with an external ½W speaker which interconnects to the rear of the console through a two-pin mating connector. This console operates in the same manner as the basic NLN4470A Console described in the preceding paragraph, except that the audio output is connected to the external ½W speaker.

g. External 12W Speaker/Amplifier Option (NLN4472A Console)

The NLN4472A Console is equipped with a 12W audio amplifier and a 12W speaker. This console operates in the same manner as the basic console previously described, except that the portable receiver audio is further amplified through an external 12W audio amplifier contained within the speaker audio amplifier housing. The audio level for the 12W speaker audio amplifier is controlled by the console volume control, regardless of portable's volume control setting.

h. External 12W Speaker/Amplifier for Unit ID Radios (NLN4781A Console)

The NLN4781A Unit ID Pocket Console Kit is equipped with an external 12W speaker audio amplifier kit and a wide-bodied console pocket to accept portable radios having Unit ID circuitry.

i. Roof-Top Antenna

Several options of vehicular roof-top antennas are available to suit a particular operating frequency requirement. The internal antenna of the portable radio is disabled and the roof-top antenna operates whenever the portable radio is inserted into the console for vehicular operation. Reception and transmission are accomplished with these vehicular (external) roof-top mounted antennas to improve the operating range of the portable radio.

INSTALLATION

1. UNPACKING

The "Converta-Com" Console has been carefully inspected and thoroughly tested before shipment from the factory. Upon receipt of the packaged console, inspect the shipping carton(s) for outward signs of damage. Any visible damage should be immediately reported to the local carrier for corrective action to repair or replace the damaged component(s). In addition, check the overall contents against the shipping invoice or bill of materials.

2. SYSTEM POWER REQUIREMENTS

Before connecting any console unit to its operating dc power source, be sure all fuses are inserted in their respective fuseholders and their values are correct (fuse values are rated for maximum system capability). Replace defective fuses with the same value only.

CAUTION

The "Converta-Com" Console is designed to operate from a negative ground system. Check the vehicle ground before installing the unit.

3. INSTALLATION PLANNING

a. General

Before starting the installation, first determine the location of the console and microphone, and if applicable, the external speaker. On most vehicles, it is necessary to penetrate the firewall to reach the battery, check the opposite side of the firewall before drilling holes, and be sure grommets are used whenever cable(s) pass through the firewall. Because of the wide variations in vehicle design, these instructions may be modified to suit each particular installation requirement. A properly installed console will minimize service calls and equipment downtime. Consider the following requirements when planning the installation.

INSTALLATION GUIDELINES

- DO use *all* mounting holes provided.
- DO use lockwashers where provided.
- DO check that console cables are not placed under stress, are not weathered, or are not subjected to damage due to engine heat.
- DO follow proper A + and A − connections.
- DO tape all splices securely.

DON'T install the console to any portion of the vehicle that is not rigid or is subject to excessive vibration.

DON'T install the console in areas where rain and snow can easily get into the console; such as next to a vehicle window which may be left opened.

DON'T dress cables over sharp edges that could cause wear or tear of the cable insulation.

DON'T install the console in locations where it will interfere with the vehicle operator or operating controls.

DON'T install the console where it will be difficult for the operator to reach.

WARNING

For vehicles equipped with electronic anti-skid braking systems, refer to the "Anti-Skid Braking Precautions" section of this manual (Installation).

b. Console Location

The console is normally mounted under the dash of the vehicle. An optional NLN4739A Installation Kit is available for mounting the console to the floor. Also, if the console is to be used with the "Systems 90" accessories, option H754 must be used with either the dash-mount kit or the hump-mount kit. A 12″ clearance is required in front of the console to insert and remove the radio, and a 3″ clearance is required in the rear to connect the power, microphone, and speaker cable (if used). Consider the accessibility of the controls to the operator. Where possible, mount the console either under the dash or on the floor near the center of the vehicle.

c. Microphone Bracket Location

Where possible, mount the bracket on the dash near the right side of the operator. The location should be within easy reach of the operator and convenient to remove and replace the microphone without interfering with any of the vehicle's panel controls.

CAUTION

Do not attach the microphone mounting bracket onto the console housing.

d. Speaker Location

The optional speaker is normally mounted under the dash, near the right side of the vehicle. However, the trunnion bracket permits mounting the speaker against a wall or at the bottom of the dash. Avoid mounting the speaker on the floor where high passenger traffic exists. A metal strap-type bracket is provided for mounting the speaker. If desired, the trunnion bracket can be removed and the hanger bracket (mounted on the back of the speaker) can be used to temporarily hang the speaker on the vehicle door or window to permit monitoring radio messages while the driver is outside the vehicle. Refer to Figure 4 for details.

e. Battery Connections

Determine the best cable route from the rear of the console to the vehicle fuse block (under the dash) and to the vehicle battery through the engine firewall. The best route should include the shortest path to the battery terminals, yet provide protection to the cable from the engine heat. Be sure grommets are used whenever the cable must pass through a hole in a metal panel such as the firewall. The power cables must also be routed in a way that protects them from being pinched, or crushed because of high passenger traffic.

f. Antenna Location

Complete installation instructions are supplied with each antenna ordered. Refer to these instructions for all information pertaining to the antenna. Also, refer to the Safety Information paragraph in the FOREWORD of this manual for additional information.

4. CONSOLE INSTALLATION

a. General

Install the console according to the following procedures, or adapt the procedures to each specific installation requirement; refer to Figure 1 or 2.

b. Dash-Mount Kit (NLN4738A)

(1) Using the trunnion bracket as a template, drill the mounting holes and mount the bracket using the hardware supplied with the installation kit.

(2) Position the console in the trunnion bracket so that the knurled fittings of the console and trunnion bracket fit together.

(3) Insert two (2) Allen-head screws and two (2) lockwashers through the trunnion bracket into the console. Do not tighten the screws at this time; it will be necessary to remove the console to attach the cables.

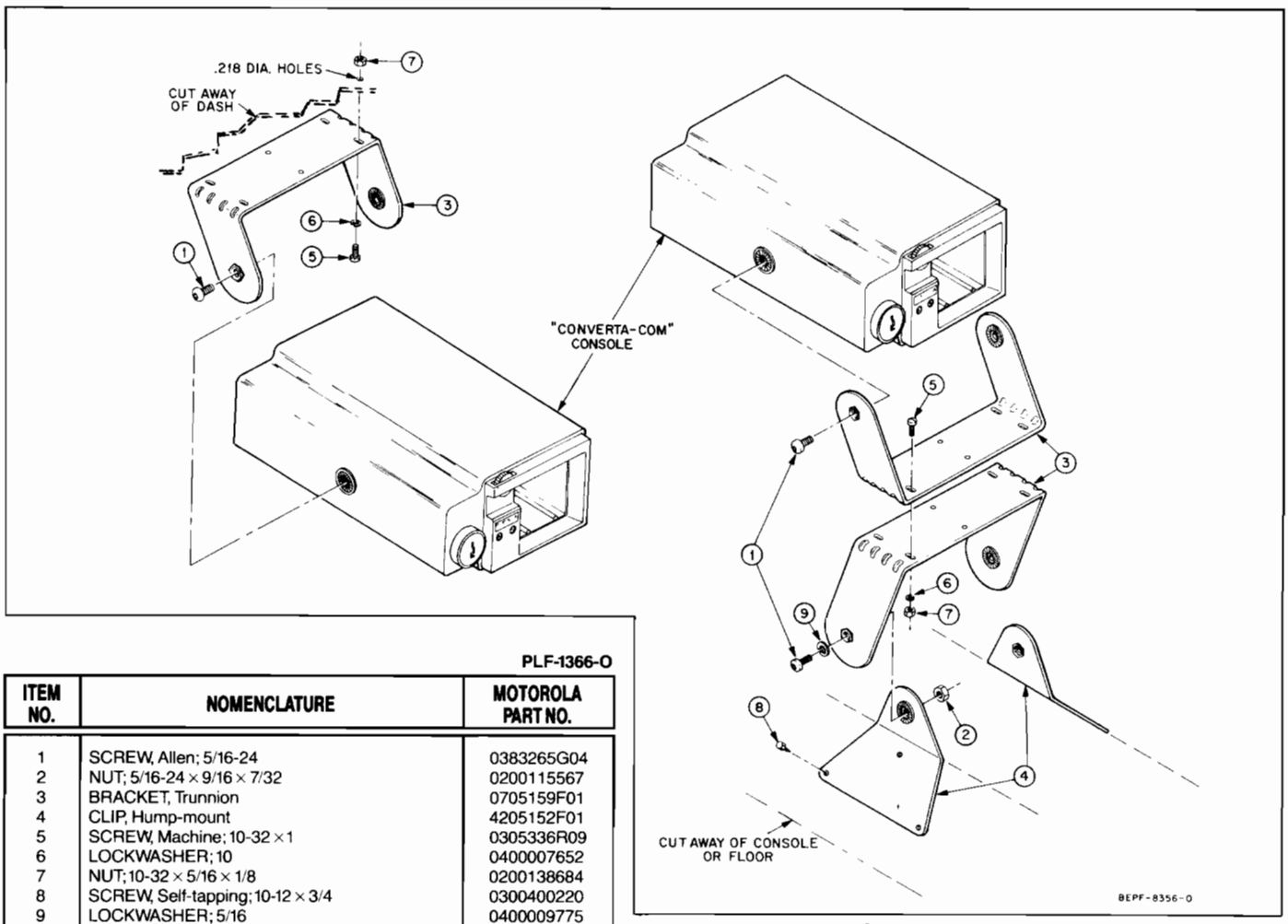

PLF-1366-O

ITEM NO.	NOMENCLATURE	MOTOROLA PART NO.
1	SCREW, Allen; 5/16-24	0383265G04
2	NUT; 5/16-24 × 9/16 × 7/32	0200115567
3	BRACKET, Trunnion	0705159F01
4	CLIP, Hump-mount	4205152F01
5	SCREW, Machine; 10-32 × 1	0305336R09
6	LOCKWASHER; 10	0400007652
7	NUT; 10-32 × 5/16 × 1/8	0200138684
8	SCREW, Self-tapping; 10-12 × 3/4	0300400220
9	LOCKWASHER; 5/16	0400009775

Figure 1. Console Installation Detail

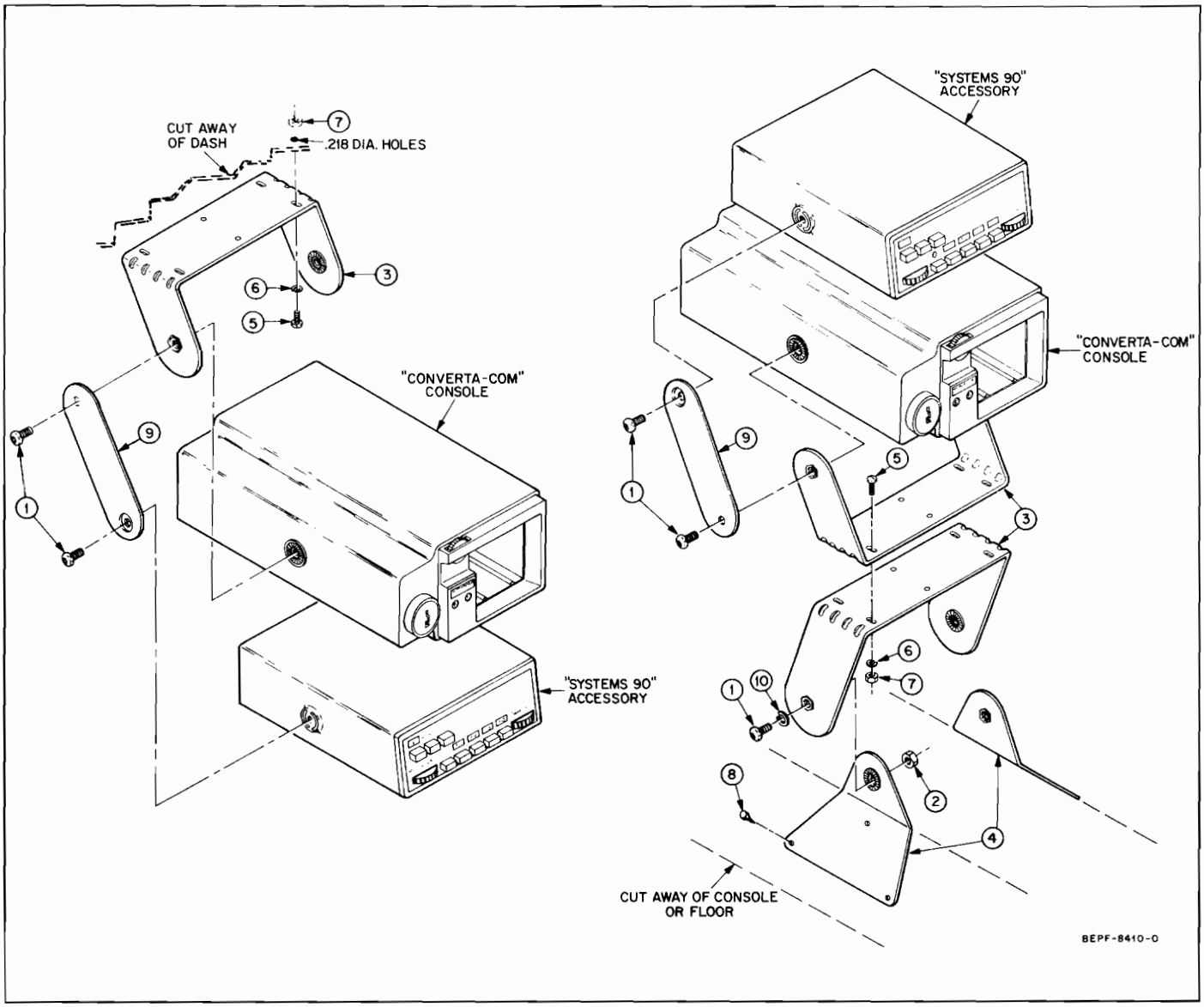

PLF-1367-O

Figure 2. Console to "Systems 90" Installation Detail

ITEM NO.	NOMENCLATURE	MOTOROLA PART NO.
1	SCREW, Allen; 5/16-24	0383265G04
2	NUT; 5/16-24 × 9/16 × 7/32	0200115567
3	BRACKET, Trunnion	0705159F01
4	CLIP, Hump-mount	4205152F01
5	SCREW, Machine; 10-32 × 1	0305336R09
6	LOCKWASHER; 10	0400007652
7	NUT; 10-32 × 5/16 × 1/8	0200138684
8	SCREW, Self-tapping; 10-12 × 3/4	0300400220
9	BRACKET, Systems 90	0705237F01
10	LOCKWASHER; 5/16	0400009775

c. Hump-Mount Kit (NLN4739A)

(1) Secure two hump-mount clips to the trunnion bracket with two (2) Allen-head screws, two (2) lockwashers, and two (2) nuts.

(2) Using the trunnion bracket from the dash-mount kit, position both trunnion brackets back-to-back so that the mounting holes are aligned. Secure the trunnion brackets together using four (4) machine screws, four (4) lockwashers, and four (4) hex nuts.

(3) Using the hump-mount clips on the trunnion bracket assembly as a template, drill six (6) mounting holes and mount the bracket assembly with six (6) self-tapping screws.

(4) Position the console in the trunnion bracket assembly so that the knurled fittings of the console and trunnion bracket fit together.

(5) Insert two (2) Allen-head screws and two (2) lockwashers through the trunnion bracket into the console. Do not tighten the screws at this time; it will be necessary to remove the console to attach the cables.

d. "Systems 90" Mount Kit (NLN4473A)

(1) If the "Converta-Com" Console and "Systems 90" equipment are to be dash mounted, perform step 4.b.(1) of this section. If they are to be hump mounted, perform steps 4.c.(1) through 4.c.(3).

(2) Locate the "Systems 90" bracket; notice that one end is flat and the other has a protrusion (see Figure 2). The end of the bracket that protrudes must face inward (towards the equipment).

(3) Position the console in the trunnion bracket so that the knurled fittings of the console and trunnion bracket fit together.

(4) To both sides of the trunnion bracket, attach a "Systems 90" bracket; feed an Allen-head screw through the hole of the flat end of the bracket, through the trunnion bracket, and into the console. Do not tighten the screws at this time; it will be necessary to remove the console to attach the cables.

(5) If there is a limited space behind the console, attach the cables before installing the "Systems 90" accessory on the mounting bracket. Refer to "Console Intercabling Detail" (Figure 9) to connect the cables to the console.

(6) Position the "Systems 90" accessory on the bracket and secure it in position with two (2) Allen-head screws.

5. ANTI-SKID BRAKING PRECAUTIONS

a. General

The following transmitter installation and test procedures are recommended for vehicles with electronic anti-skid braking systems.

b. Installation Suggestions

Locate the braking modulator box in the vehicle. The braking modulator box is located in the trunk in Chrysler Corporation cars and either in the trunk or under the dash in General Motors and Ford Corporation automobiles. A service manual may be helpful to aid in the location of the braking modulator box. Perform console installation in accordance with the following recommended procedures:

1. If the braking modulator box is mounted on the right side of the vehicle, mount the console on the left side to give it as much space as possible between the braking modulator box and the console. If the braking modulator box is mounted on the left side, reverse the procedure.
2. Use the shortest practical length of Motorola coaxial cable.
3. Mount the antenna on the opposite side of the car trunk from the braking modulator box.
4. Route all cables along the opposite side of the vehicle from the braking modulator box.
5. **Do not** operate the transmitter while the vehicle is in motion with the trunk lid open.

c. Test Procedure

This test is divided to cover several different types of interference. Disturbance of the electronic anti-skid device can usually be detected in several different ways in the vehicle's braking system; i.e., by the lights, any irregular audible sounds, any change in the performance of the braking system itself, etc.

NOTE: During checks 1 through 6, however, none of the above conditions should be observed.

1. With the car gear selector in NEUTRAL or PARK and the engine running at a fast idle, key (turn the carrier on and off) the transmitter with and without modulation keeping your foot off of the brake pedal. Refer to the note above.
2. Repeat the preceding procedure with your foot gently pressing on the brake pedal. Refer to the note above.
3. When making this test, while the car is stationary, allow at least 2 car lengths and possibly even more of clear area in front of the vehicle. Press your foot on the brake with just enough pressure to keep the vehicle from moving. Place the car in a forward gear with the engine at a fast idle, then key the transmitter with and without modulation.

WARNING

Disruption of the anti-skid braking system may cause the vehicle to move forward in addition to the lights and audible sounds mentioned above.

4. Drive at a moderate speed (15-25 mph) with your foot off the brake pedal, and have an assistant key the transmitter with and without modulation. Refer to the above warning.
5. Repeat step 4 with foot slightly on the brake pedal to turn on the brake lights. Refer to the above warning.
6. Increase speed to 25-30 mph. Decelerate slowly and come to a stop. As you do so, have an assistant key the transmitter with and without modulation.

WARNING

Severe disruption of the electronic anti-skid braking system may cause loss of control of the vehicle during steps 6 and 7.

7. While making abrupt stops from 20 mph, have an assistant key the transmitter with and without modulation.

If no interference or disruption is noticed, repeat making abrupt stops from 30 mph.

If no malfunctions are observed after the above tests are performed, it can be assumed no apparent problem exists and the car can be released to the customer.

If any of the previously mentioned tests results in a brake malfunction, contact the car manufacturer service department as soon as possible and remove the radio from the vehicle. **Do not** complete installation.

6. MICROPHONE BRACKET INSTALLATION

The microphone bracket should be installed within easy reach of the operator. When mounting the bracket onto the dash, make sure that all vehicle wires are cleared from the panel before drilling the mounting holes. Refer to Figure 3 and attach the microphone bracket to the mounting location on the dash. Using it as template, drill the mounting holes and attach the bracket to the dash using the two self-tapping screws provided. Be sure to have enough room above the bracket to easily insert and remove the microphone.

CAUTION

Do not mount the microphone bracket on the "Converta-Com" Console housing.

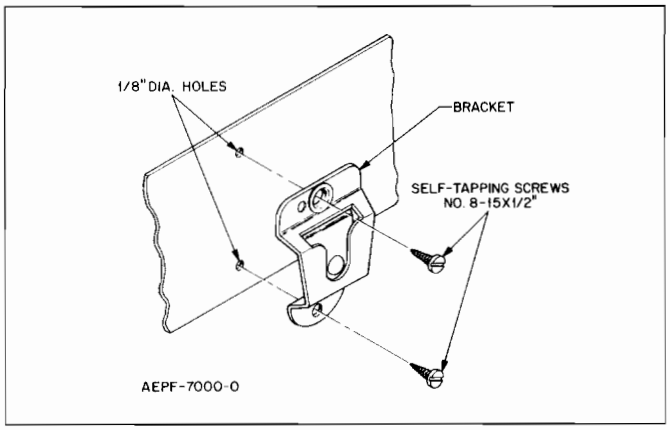

Figure 3
Microphone Bracket Installation Detail

7. SPEAKER INSTALLATION

a. 12W Audio Amplifier-Speaker Installation

Refer to section 68P81102C04 in the back of this manual for installation details for the 12W audio amplifier-speaker.

b. External ½W Speaker Installation

1. Using the speaker trunnion bracket as a template, drill the necessary mounting holes and secure the bracket with the self-tapping screws provided in Speaker Mounting Hardware Kit, part no.0105954C50. Refer to Figure 4 for details.
2. Position the speaker onto the trunnion bracket, and secure it into position using the wing screws supplied.
3. Connect speaker plug P2 to J2 of the "Converta-Com" Console.
4. Neatly route the speaker leads and secure them from view

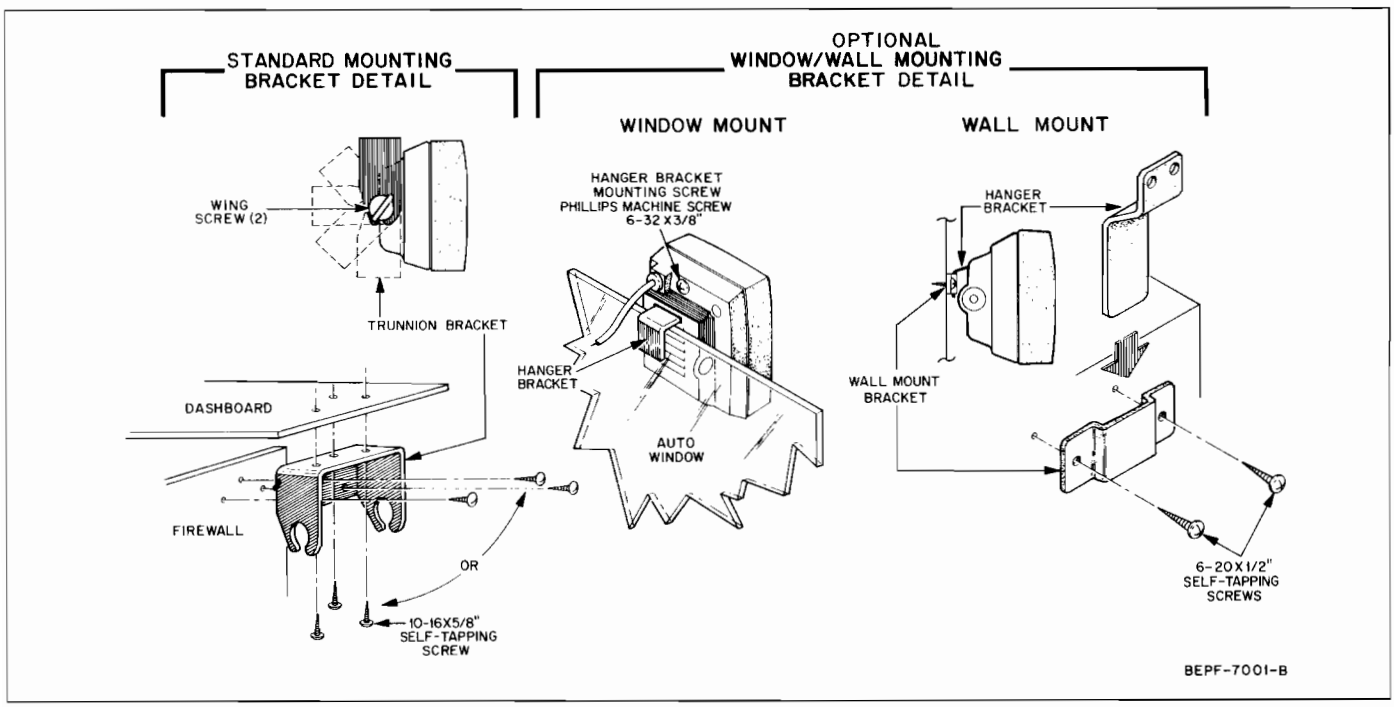

Figure 4. External ½W Speaker Installation Detail

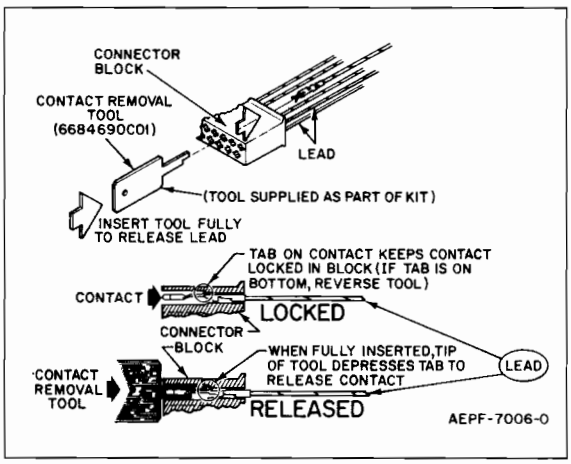

Figure 5.
P3 Contact Pin Removal and Installation

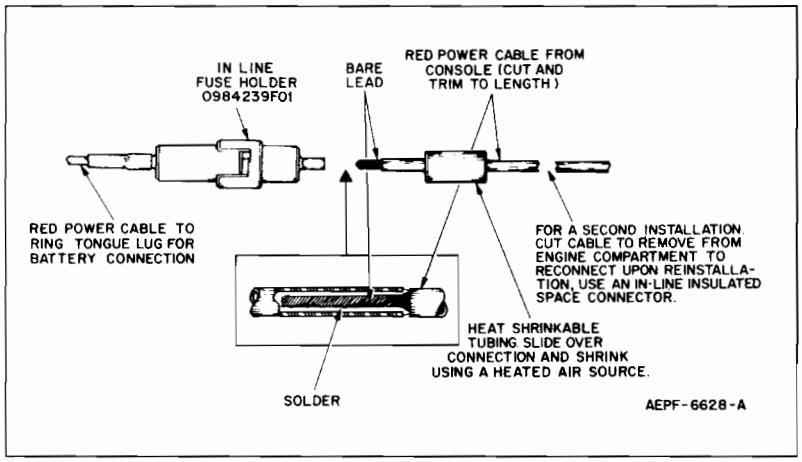

Figure 6.
Fuseholder Wiring and Installation

CAUTION

Care should be exercised when connecting **external** audio PA systems to the output of J2, the ½W speaker jack. Do not ground pin 2 of J2 as this may damage the portable radio audio PA module.

8. ANTENNA INSTALLATION

Install the antenna as outlined in the installation instructions supplied with the antenna. Pertinent information on frequency matching and mounting details are supplied with each antenna option.

9. CONSOLE INTERCABLING CONNECTIONS

Refer to Figure 9 before connecting any cable to the console. As shown in the figure, the console is used in a negative ground electrical system. Also shown are the termination points for the external speaker (½W or 12W). Perform the following procedure.

CAUTION: Remove two six-ampere fuses from both power cables (red wire and orange wire).

a. Refer to Figure 5 for information on removing and inserting the contact pins in the multiconductor plug, if necessary.

b. If necessary, drill a ¾" entrance hole in the firewall and insert the grommet.

c. Route the red lead (without fuseholder) and black lead through the firewall and into the battery compartment.

d. Connect the black lead to the negative (−) battery terminal.

e. Refer to Figure 6. Cut and trim to length the red power lead and connect the red lead to the fuseholder.

CAUTION: Strip only sufficient insulation from the red power lead. Thoroughly tape the entire connection upon completion.

f. Connect the red lead with the in-line fuseholder to the positive (+) battery terminal.

g. Dress the wires so that they do not obstruct any operating controls nor touch hot or moving parts of the engine.

h. Refer to Figure 7 and install the fuseholder mounting bracket in the battery compartment to hold the in-line fuseholder of the red power lead.

i. Route and connect the orange ignition wire to the fuse block or ignition switch for switched power.

j. Refer to Figure 8 and connect the multiconductor plug and microphone plug to the console.

NOTE: The 12W audio/amplifier speaker cable connects directly to the multiconductor cable plug P3.

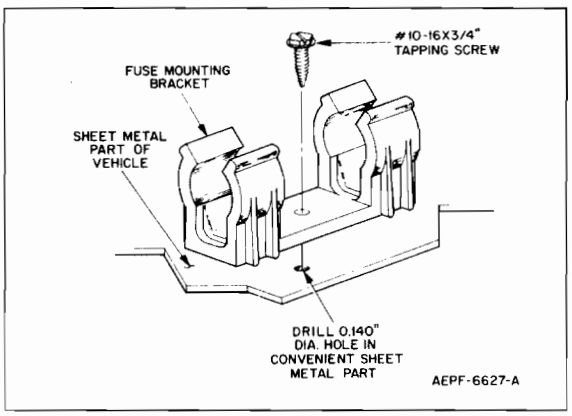

Figure 7.
Fuseholder Mounting Bracket Installation

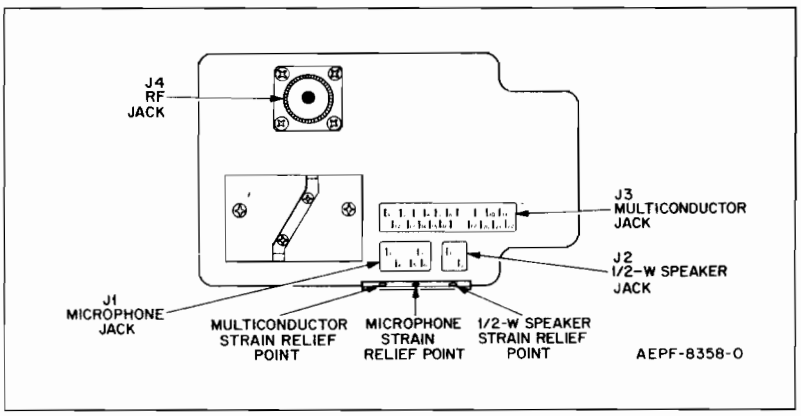

Figure 8.
Console Jack Locations

k. If either of the two external speakers is used, connect it to the console in accordance with the information in Figure 9. Also refer to the 12W audio amplifier/speaker instructions (68P81102C04) provided in the back of this manual.

l. Connect the antenna cable connector to the console rf jack J4 (see Figure 8).

m. Position the console in its operating position and tighten the Allen-head screws (Item 1, Figure 1).

n. Replace the console in its operating position and tighten the Allen-head screws (Item 1, Figure 1).

CAUTION: When reinstalling the two six-ampere fuses, install a fuse into the red-lead fuseholder first; then install a fuse into the orange-lead fuseholder.

10. INSTALLATION CHECKOUT

After completing the console installation, check all electrical wiring for tight connections. Also check all mechanical parts for tight and secure mounting.

Check for proper operation of the console and radio. Refer to a separately supplied Motorola publication, "Converta-Com" Console Operating Instructions, Motorola publications number 68P81013C35.

NOTE: If alternator or other vehicular noise is present in the received signal or in the transmission, refer to Motorola publication "Reducing Noise Interference in Mobile Two-Way Radios," Motorola publication number 68P81109E33, which may be ordered separately from Motorola Communications Sector National Parts Department.

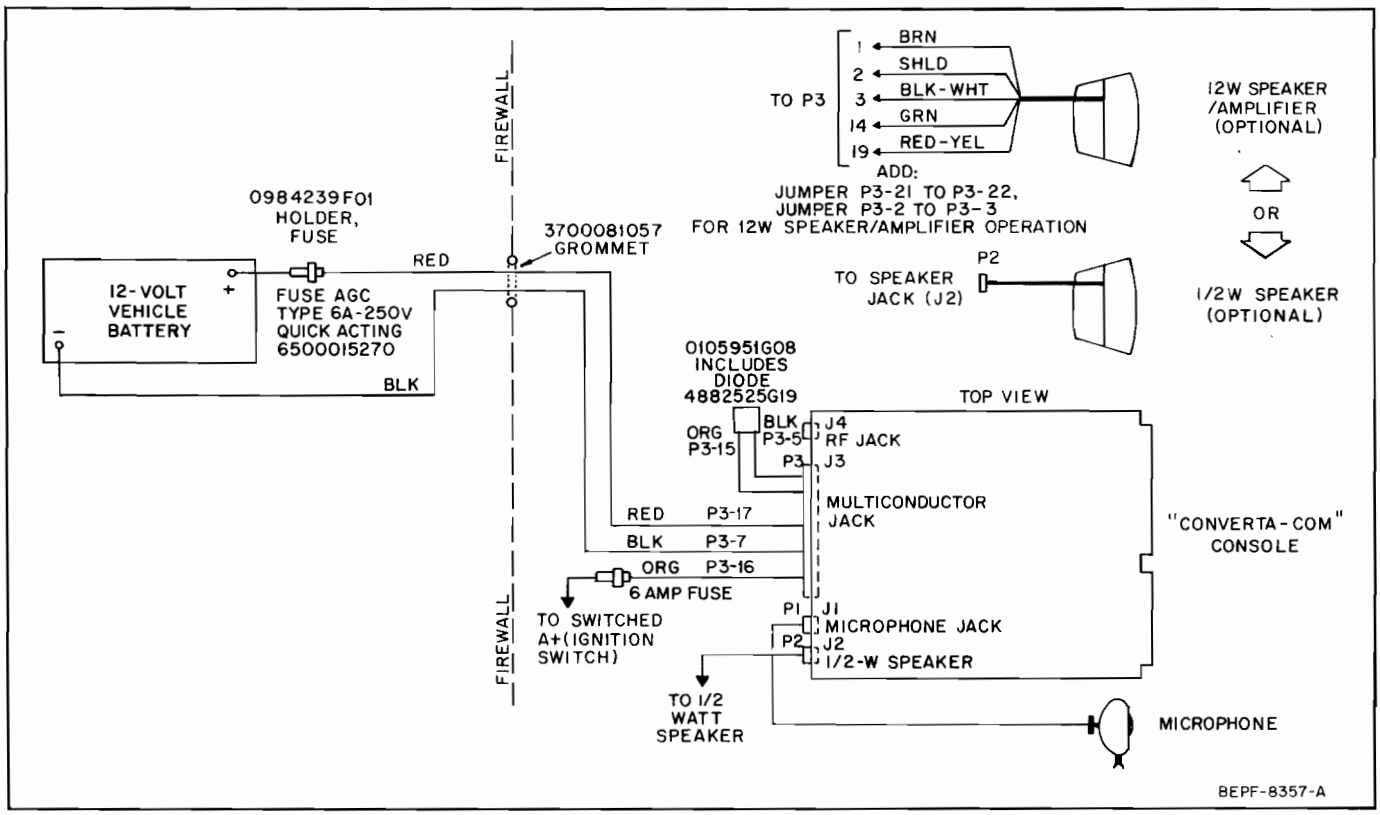

Figure 9. Console Intercabling Detail

NKN6226A Power Cable Kit TPLF-1574-B

MOTOROLA PART NO.	DESCRIPTION
3000858552	Battery Cable (BLACK)
3000858553	Battery Cable (RED)
3010286B77	Ignition Cable
0984239F01	Fuseholder (Red Battery Cable)
4284275B01	Fuseholder Mounting Bracket (Red Battery Cable)
0300400465	SCREW, Tapping; #10-12 × 3/4
1482882A01	Inline Fuseholder Body
1482883A01	Inline Fuseholder Cap
4282884A01	Fuse Clip
4182885A01	Fuse Compression Spring
6500015270	FUSE, 6A/250V; 3AG
2982044J02	Battery Terminal Ring Lug
2982607B05	Ignition Terminal Ring Lug
3700081057	Rubber Grommet
1484556B01	Connector Block Housing
0984151B06	Connector Block Contacts
4200867839	Cable Clamp ("S" Hook)
4200893464	Cable ("S" Hook)
4210217A04	Cable Harness Strap
6684690C01	Contact Removal Tool
0105951G08	Diode, With Leads

THEORY OF OPERATION

1. GENERAL

Connection between the radio battery and the console is made through the charger contact block (contacts C, S, and H) in the rear of the radio pocket. The contacts on this block and the associated console circuitry automatically charge the portable radio battery.

Connection between the console and the portable radio functions is made through the portable radio side circuitry (P203). When the portable radio is inserted into the console pocket, the side connector pins are automatically engaged, and all basic portable radio functions are available to the console.

All basic portable radio controls remain operable except for the volume control when the 12W external audio amplifier/speaker is used. The hand-held microphone and the mobile roof-top antenna are also automatically connected to the portable radio when it is inserted into the console pocket.

During the following circuit descriptions, refer to the appropriate schematic diagrams in the pull-out pages of this manual.

2. CIRCUIT DESCRIPTIONS

a. General

The console is powered directly from the vehicle battery and through the vehicle ignition switch. The console consists of battery charging, PTT interlock, and audio preamplifier circuits.

b. Battery Charging Circuit

When the vehicle ignition switch is turned "on," transistor Q101 provides a ground for oscillator circuit U101, turning it on into oscillation. Vehicle A+ is constantly applied to U101 and the voltage doubler circuit consisting of Q102, Q103, Q104, Q105, CR102, CR103, C104, and C105. Transistors Q102, Q103, Q104, and Q105 operate as class C power amplifiers which amplify the 20kHz signal from U101. The output of the amplifiers is coupled to junction of diodes CR102 and CR103 which alternately charge C104 and C105. The output of the voltage doubler circuit is applied to a current limiter consisting of Q113, CR104, CR105, CR106, R109, R110, and pocket switch S1. CR104, CR105, and CR106 provide a voltage reference for the current limiter circuit. The output of the current limiter is then fed through battery detector circuit Q110, CR112 and CR113, and on to the radio battery through L101.

Charge current is set to "slim-line" radios by R109. For setting "omni" radio charge current, R110 is placed in parallel with R109 whenever pocket switch S1 is closed.

When a radio is inserted into the "Converta-Com" Console, the charge current to the battery causes Q110 to conduct due to the voltage drop across CR112 and CR113. A portion of the current limiter output is shunted through Q110 to a latching circuit and the green LED charge indicator.

The latch circuit consists of Q111 and Q112. With an "omni" radio in the console and the radio battery charge control thermostat closed, Q111 and Q112 are not conducting, thereby allowing a high rate of charge current into the battery.

Because of the battery charging contact arrangement, the battery charging current is at the slow-charge rate when a "slim-line" radio is inserted into the console. Depressing the microphone switch for the first time will reset the charging circuit to a rapid charging rate.

As the radio battery approaches complete charge, the charge control thermostat will open due to the temperature rise of the charged battery. A positive voltage is then applied to the base of Q111, causing it to conduct and turn on Q112. A portion of Q112 collector current is applied to the base of Q111, forward biasing it enabling the circuit to latch on. Another path for Q112 collector current is through R126 to the base of Q109, turning it on. With Q109 conducting, Q107 is forward biased, shorting out CR104 and CR105 in the current limiter circuit (this causes the rate of the battery charge current to drop by a factor of 10). If the battery charge control thermostat closes after rapid charge, the latch circuit will not revert to the rapid charge mode because the blocking action of CR110 allows the charge circuit to remain in the slow charge mode.

With a "slim-line" radio in the console, operation of the latch circuit is identical except that the "slim-line" battery incorporates a positive temperature controlled thermistor in place of a thermostat for the charge control. When the thermistor resistance reaches approximately 800Ω with temperature rise, the voltage at the base of Q111 becomes sufficiently biased to cause the latch circuit to operate as previously described.

Two other modes of charge control are also designed into the "Converta-Com" Console: voltage cutoff and dynamic voltage clamp. If the battery voltage exceeds 18 volts during rapid charge as a result of low temperature, full charge, poor console-to-radio connection, or poor radio-to-battery connection, the latching circuit reduces the rapid charge rate to a low charge rate. Battery terminal voltage is sensed by regulator VR101. Any voltage exceeding 18 volts is coupled to the base of Q111 through R121 and CR114, causing the latch circuit to reduce the charge rate. If the battery terminal voltage continues to rise even during trickle charge, the dynamic voltage clamp circuit begins to operate. As the battery voltage approaches 18.6 volts, transistor Q114 begins to conduct, turning on Q115. Q115 and R139 are in parallel with voltage reference diodes CR104, CR105, CR106. When Q115 starts to conduct, the reference voltage approaches zero volts, reducing the slow charging current to extremely low value.

The charger circuit resets to rapid charge from a slow charge state during transmit mode. When the microphone push-to-talk switch is depressed, pin 6 of J1 is grounded through the microphone circuit. The PTT ground is then applied through PTT interlock Q1 and CR111 to Q111 in the latch circuit. This causes the voltage at the base of Q111 to drop below its emitter voltage, thus resetting the latch circuit to a high battery charging rate. In addition to resetting the latch circuit, the PTT ground is also coupled to the base of Q106, causing it to conduct. If a "slim-line" radio is used, pocket switch S1 remains open. Q106,

which is in parallel with S1, electrically closes during transmit, causing the current from the current limiter to be approximately twice the "slim-line" rapid charge rate.

If an "omni" radio is used, the charge rate will be the same as the standard rapid charge rate. If the thermostat in the battery is open during transmit, the charger circuit reverts to the slow charge rate when the microphone PTT switch is released. However, if the thermostat is closed, the charger circuit remains in the rapid charge rate until the battery temperature causes the thermostat to reopen.

c. Interlock Circuit

The vehicle ignition switch controls several functions within the "Converta-Com" Console: the night light, the PTT interlock, and charger oscillator U101. Q1 prevents the external PTT switch from resetting the charger latch circuit in the event the radio switch is off. Q1 also provides a dc path for the red transmit indicator when the portable radio is turned on. The radio PTT switch, Q2, is biased by the vehicle ignition switch. This prevents the radio from transmitting whenever the vehicle's ignition switch is off. The ignition switch also controls Q101, enabling the charger oscillator (U101) to operate only when the ignition switch is on.

The night light switch Q301 is biased on by either the vehicle ignition switch or the portable radio on/off switch.

d. 12W Audio Preamplifier Circuit

The 12W audio preamplifier circuit is used only when the optional 12W external speaker/amplifier and volume control are added to the console. When the portable radio is switched on, Q204 is forward biased, turning "on" Q205, which in turn switches the vehicle's operating battery voltage to Q201, Q202, and Q203. When audio signal is received by the portable radio, the signal is applied via the console volume control to the base of emitter follower Q201. The signal is then amplified by voltage amplifier Q202 and directly coupled to the base of Q203. Q203 is an emitter follower and processes the audio signal to the external 12W speaker/audio amplifier. The audio signal is further amplified to 12W in the external speaker/audio amplifier housing.

e. 12W External Audio Amplifier-Speaker

For description of the 12W audio amplifier-speaker circuits, refer to manual 68P81102C04 in the back of this manual.

f. Side-Tone Switching Circuit

The side-tone switching circuit monitors two outputs from the radio; the output of the radio preamplifier (P6-V) and the ½W audio (P6-W). The presence of a side-tone signal (Unit ID or single tone) is indicated by presence of audio at P6-W of the connector board, and is routed to the input of the side-tone switching circuit via P7-15. The presence of ½W audio is detected by the side-tone switching transistors Q501 through Q506, while Q507, Q508, and Q509 are switched on when a dc voltage is present at the portable radio preamp output. Q510 and Q511 route the tone to the input of the 12W audio amplifier/speaker.

When a dc voltage is present at the output of the portable radio preamplifier, Q507 and Q508 are turned on. Q507 sets and holds a reference voltage for the emitter of Q508 to ensure quick turnoff when the radio receiver squelches. When Q507 is on, it causes Q509 to turn on. Q510 is then turned off, turning off Q511 and preventing feedthrough of the ½W audio to the 12W audio amplifier. Also, Q504 is turned off to prevent the audio detector from interfering with the operation of the console squelch switch circuit (Q503, Q504, Q505). When no dc is present at the 12W audio preamplifier output (radio squelched or transmitting) Q507, Q508, and Q509 are off, allowing the audio detector (Q501 through Q506) to function and to turn on Q510. Turning on Q510 causes Q511 to saturate, coupling audio from the ½W output to the input of the 12W audio preamplifier circuit. The level of the side-tone heard at the speaker can be adjusted with R531.

Detector transistors Q501 and Q502 amplify the console ½W audio signal. The audio from Q502 is coupled through C503 to the base of Q503. Diode CR501 clamps the negative excursion of the audio signal to −0.7V. Components R506, R507, R508, and CR502 set a bias level of 0.3V at the base of Q503. Q503 is turned on for the portion of the audio signal in excess of 0.6V, causing C504 to discharge through R509 and turn on Q504. When the audio signal drops below 0.6V, Q503 turns off, but Q504 remains on until C504 is discharged. During the time Q504 is on, positive feedback is provided to the base of Q503 through R518. This feedback keeps Q503 turned on longer, decreasing the amount of ripple at the collector of Q504. Transistor Q504 also charges C505 through R512 and turns on Q505. Once Q504 turns off, Q505 is kept on until C505 is discharged. The delays introduced by C504 and C505 are sufficient to keep Q505 on continuously when the ½W audio is present. When Q505 is on, Q506 is also turned on, passing the 12W audio squelch through R517 and CR503 to J3-14 of the connector board.

g. Time-Out Timer Circuitry

The time-out timer option limits the duration of the portable radio transmission to 50 seconds. Once the 50-second limit is exceeded, the portable radio transmitter is dekeyed and an alert tone is generated and heard at the speaker, letting the operator know his transmitter is turned off. The red PTT indicator on the console continues to glow as an additional reminder to the operator that his PTT switch is still on. When the PTT switch is released, the alert tone ceases and the portable/console combination reverts to normal monitoring operation, resetting the T•O•T so that transmission can again be initiated by depressing the push-to-talk switch.

Depressing the microphone switch applies ground (through Q1 on the connector board) to the base of Q401 and Q403, turning Q401 and Q403 on. When Q401 is turned on A+ is applied to U401, and C401 begins charging through R403. Pin 3 of U401 goes high, which turns on Q402 and pulls the PTT line low, keying the portable radio transmitter through Q2 on the connector board. At the same time, Q403 is on and applies

supply voltage to U402. U402 is connected as an oscillator to generate alert tone at this time, Q406 is off preventing the tone from reaching the input to the 12W audio amplifier.

Once C401 charges to 2/3 of the supply voltage (approximately 50 seconds after the PTT switch is closed), pin 3 of U401 goes low, turning off Q402 which opens the transmitter PTT line of the portable radio. At the same time, pin 7 of U401 goes low and turns on Q404. Q404 turns on the 12W audio through R412 and CR403. Q404 also turns on Q406 which allows the alert tone being generated by U402 to be fed to the input of the 12W audio amplifier. The level of the alert tone heard at the speaker can be changed by adjusting R410. In addition, Q407 is turned off by CR404, blocking the receiver audio from the 12W input.

When the PTT switch is released, Q401 and Q403 turn off which also turns off U401 and U402. This causes Q404 to turn off, returning control of the 12W audio to the console squelch circuit (Q3, Q4, Q5 on connector board) and turning Q407 on which allows receiver audio to be applied to the 12W input. Since U402 is turned off, generation of the alert tone stops.

h. Side-Tone Switching with Time-Out Timer

(1) *General*

This option provides a combination of side-tone switching and time-out timer functions. The circuitry and operation of the side-tone switching option is the same as described in paragraph 2.f. of this section. The time-out timer, however, is configured differently. Despite differences in the configuration, the function is similar to that described for the time-out timer in paragraph 2.g. of this section.

(2) Time-Out Timer Circuit Description

Depressing the microphone switch applies ground (through Q1 on the connector board) to the base of Q512 and forward biases it into conduction. When Q512 is turned on, supply voltage is applied to U501, and C512 begins charging through R534 and R535. Pin 3 of U501 goes high, turning on Q513. This pulls the PTT line low, which keys the portable radio transmitter.

Once C512 charges to 2/3 of the supply voltage (approximately 50 seconds after the PTT switch is closed) pin 3 of U501 goes low, turning off Q513 which opens the transmitter PTT line of the portable radio. At the same time, pin 7 of U501 goes low and turns on Q514, which turns on U502 through CR509. U502 produces a square-wave output which is coupled through R540 and C516 to Q515. Q515 is turned on by Q514, coupling the alert tone to the input of the external 12W amplifier. The amplitude of the alert tone can be changed by adjusting R540. Q514 also turns on Q505 which turns on Q506 and the external 12W audio amplifier through R517 and CR503. In addition, Q516 is turned off through CR511, blocking receiver audio from the 12W input.

When the PTT switch is released, Q512 is turned off, turning off U501 and U502. This causes Q505, Q506, and Q514 to turn off which returns control of the external 12W audio amplifier to the console squelch circuit (Q3, Q4, Q5 on connector board). Also, Q516 is turned on, allowing receiver audio to be applied to the 12W input. Since U501 is turned off, generation of the alert tone stops.

MAINTENANCE

1. INTRODUCTION

Efficient corrective maintenance requires an orderly and logical troubleshooting procedure for localizing malfunctions in the "Converta-Com" internal or external circuits. The troubleshooting and repair of the console will be greatly simplified by becoming familiar with the overall console and radio operation.

This section provides detailed information required to isolate malfunctions to the internal or external circuits associated with the console. The Troubleshooting Guide at the end of this section provides information on possible circuit failures, related symptoms, and suspected malfunctioning stages.

Generally, it may be assumed that if the console is totally inoperative, the portable and/or vehicular battery are completely discharged, fuse is blown, or the power lead is opened. However, if the console operates in the transmit mode, but not in the receive mode (or vice versa), it may be assumed that the batteries are serviceable and that one or more internal or external functional console circuits are defective or marginal. Using diagrams, troubleshooting charts, and deductive processes, the suspected circuit may be readily found.

To further analyze the symptoms and possible cause(s) of the malfunction, check rf power output using an in-line wattmeter, audio deviation, and current drain. Once the general problem area of the console system has been identified, careful use of a dc voltmeter, ohmmeter, and/or oscilloscope should help isolate the problem to a defective component.

2. TEST EQUIPMENT

The chart below lists the recommended test equipment to properly service the console. See your Motorola sales representative for aid in ordering test equipment. The sales representative will analyze your requirements and help you select the latest available equipment and service aids to suit your individual needs.

Battery operated test equipment is recommended when available.

3. TROUBLESHOOTING CIRCUIT BOARDS

If circuit boards must be tested, the circuit boards may be removed from the console and interconnected outside of the "Converta-Com" chassis. Use care to isolate the circuit boards from accidentally shorting out the boards against the metal chassis.

4. CONSOLE DISASSEMBLY

For access to all internal parts of the console, remove the housing, as described in the following paragraphs. Refer to the Mechanical Parts Detail for a detailed exploded view of the console internal assembly.

a. Locate the two Allen-head screws in the mounting detent washer on each side of the console housing. Remove the Allen-head screws, lockwashers, and detent washers.

b. Slide the console chassis out from the rear of the console housing by lifting the rear top portion.

c. To reassemble, reverse the procedure.

RECOMMENDED TEST EQUIPMENT

MODEL NO.	NAME	CHARACTERISTICS	APPLICATION
R-1200 series	Service Monitor	-----	Signal generator and frequency/ deviation meter for wide-range troubleshooting and alignment
S-1347 or S-1348	DC Power Supply	0-20Vdc, 0-5 Amps, Current Limited	Bench supply
S-1053	AC Voltmeter	1mV to 300V RMS −72dB to +52dB	Audio voltage measurements and takeover measurements
S-1063	DC Voltmeter	100mV min. full scale, 1uA-300mA, 11 megohms input resistance, 0.2Ω – 50 megohm resistance	DC voltage and resistance measurements
R-1004	Dual-Trace Oscilloscope	DC; DC to 15MHz. AC; 2Hz to 15MHz 10MHz bandwidth, 10mV/cm	Waveform measurements
S-1350	In-Line Wattmeter	2.5W to 1000W; insertion type Wattmeter, indicates forward or reverse power	Checks portable power output while in the console and reflected power from the antenna system
T-1013	Dummy Load	Can dissipate up to 300W	rf load resistor (0-1000GHz)
T-1009 or T-1010	AC-DC VOM	20KΩ/Volt DC 5KΩ/Volt AC dB scale: −20dBm to +50dBm	Multi-purpose battery operated VOM
S-1067	Audio Oscillator	-----	Audio circuit testing
RSX-1002 RSX-1003	Power Desoldering Station	Temperature controlled soldering iron with fixed vacuum air pump	Vacuum operated desoldering station

5. PARTS AND SUBSTITUTION

When defective parts or components must be replaced, identical parts should be used. If the identical replacement component is not locally available, check the parts list of the respective printed circuit board for the proper Motorola part number and order the components from the nearest Motorola Replacement Parts Depot as listed in the "Replacement Parts Ordering" on the inside back cover of this manual. If for any reason, substitutions must be made immediately, reinstall the exact replacement part as soon as possible to assure optimum performance. The substituted part must have identical electrical characteristics and must be of equal or higher voltage and current ratings.

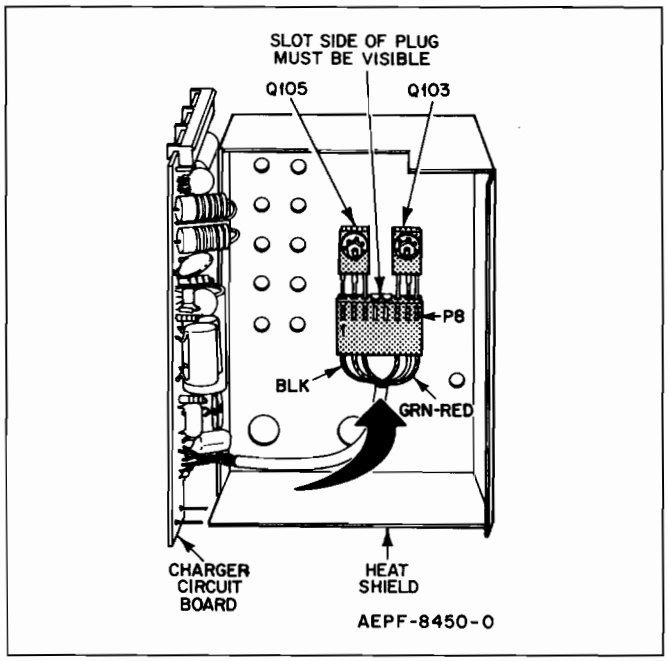

Figure 10. Interconnection Detail

If it is necessary to replace transistors Q103 and Q105 on the charger board shield, make sure to use an insulator and heat conducting silicone grease under the transistors. The two screws holding Q103 and Q105 also use insulated bushings. Be sure to reinstall the bushings if these transistors are replaced (see Figure 10).

6. REMOVAL AND REPLACEMENT OF CIRCUIT BOARDS AND CHASSIS-MOUNTED COMPONENTS

To determine the location of printed circuit boards and chassis-mounted components, refer to the console's exploded view in the Mechanical Parts Detail diagram.

7. REMOVAL OF MECHANICAL PARTS

Refer to the Preventative Maintenance Section for instruction on removal and replacement of the major mechanical parts. Also refer to the Mechanical Parts Detail for additional information.

8. SOLDERING TECHNIQUES

a. Soldering Circuit Board Components

Early printed circuit board repair techniques stressed the use of low wattage soldering tools to prevent board damage when components were removed. Experience has shown that the low wattage iron may actually cause printed circuit damage. A considerable amount of time is required to heat a connection to its solder melting point when a low wattage soldering iron is used. During this heating time, heat is conducted away from the connection along the printed circuit wiring. This conducted heat may separate the copper foil from the board and may also damage nearby solder junction points. The ST-1087 Soldering Station, with an 800°F tip, is an excellent choice for printed circuit work. This iron has a temperature-controlled tip to prevent excessive heating and also increases the life of the soldering tip.

NOTE: Use resin solvent and a small brush to clean the surface area of the printed circuit before and after soldering components to the circuit boards.

For removal and replacement of components from printed circuit boards, use a circuit board holder such as the Motorola ST-458 or equivalent. Mount the circuit board in the holder and rotate the board to a convenient position. Gently grasp the component lead with a "seizer" (Motorola ST-207) or needle-nose pliers. Heat the solder connection as described in the preceding paragraph, and remove the lead from the board. Do not apply the soldering iron any longer than necessary to free the lead. After the component has been removed, prepare the board for the new component by extracting all solder from the mounting holes.

Use resin solvent and a small brush to clean the worked-on portion of the printed circuit. Use the leads of the defective component as a model to form the leads of the replacement. Insert the new component with a slight bend on the leads at the board to prevent movement while soldering. Heat the lead and the printed circuit at the connection pad with a clean, hot, well-tinned iron. Apply solder in moderation. Use only enough to fill the hole, coat the pad, and provide a slight fillet around the component lead, then immediately remove the solder and iron. Allow time for solidification before proceeding. Do not disturb the component while the connection is cooling. After the solder has solidified, clip the lead as close to the board as possible. Clean away residue with resin solvent and a small brush. The finished connection should have a bright, mirror-like appearance.

b. Desoldering Circuit Board Components

Clearing circuit board holes of excess solder with a pick, as formerly recommended for some Motorola products, has been shown to cause damage to the plating and the eyelet when excessive zeal is used in applying this technique. In order to prevent damage, a Power Desoldering System RSX1002 is highly recommended for printed circuit board component removal.

The Motorola Power Desoldering System provides vacuum, pressure, and hot air jet modes of operation in one compact unit. The system features a high flow rate of air which provides rapid cooling of the desoldered joint to prevent resweating or damage to circuit boards or expensive components.

The Power Desoldering System is completely self-contained, and includes two independent temperature controls; one for the desoldering handpiece, and the other for a soldering iron. A foot pedal is used for control of the desoldering station by remote control.

First, the area to be desoldered, such as a plated eyelet, is heated with the temperature controlled handpiece to melt the solder. Then a high flow rate of air, controlled by the foot pedal, is drawn through the plated eyelet, across the pads, and around the lead to remove solder by vacuum suction and to cool the area, preventing resweating. The desoldering tip is rapidly cooled by the air flow at the same time preventing further unnecessary heat from being applied to the workpiece. Molten solder and clipped leads, if any, are drawn up through the handpiece and away from the printed circuit board.

Second, where plated-through holes are used, the pressure mode provides a means of removing sweat joints resulting from insufficient hole clearance. Using this mode, "blindsided" solder joints can also be removed without damage to pads or plated-through holes.

Third, the combination of precise heat and pressure controls provides a hot air jet for removing lap soldered joints without touching the circuit board.

9. CONSOLE TROUBLESHOOTING GUIDE

SYMPTOM	POSSIBLE SOURCE OF TROUBLE
Console Dead	Check fuses Check battery connections Check for opened power cables Check console pocket battery contacts Check S1 switch
No Receive No Transmit	Check P203 console to portable mating connector Check P3 and J3 Check vehicular roof-top antenna Check vehicular antenna coax line Check connector board Check P1 and J1
No Transmit	Check PTT circuit Check microphone and cord Check connector board Check T•O•T if used Check fuses Check S1
No Receive	Check speaker audio circuit Check P203 Check connector board Check P3 and J3
No Charge No Audio	Check charger board Check S1 Check connector board Check Q113, P6 and J6 Check Q103, Q105, P8 and J8 Check P5 (J5), P6 (J6) Check radio battery to console mating contacts Check P3 (J3)

SYMPTOM	POSSIBLE SOURCE OF TROUBLE
Hi Rapid Charge Rate (over 18V)	Check portable radio battery Check console to radio connections Check radio to battery connections Check latching circuit Check VR101, Q111, CR114 Check voltage clamp circuit
Lo Battery Charging Rate	Check latch circuit Check voltage clamp circuit Check Q114, Q115, CR104, CR105, CR106
Low Transmitter Deviation	Check microphone Check MIC audio circuit Check connector board Check P203 Check microphone cord Check P1 (J1)
No Transmit rf Power	Check battery A+ Check P3 (J3) Check fuses Check P203 Check antenna and line
Hi Reflected Power	Check vehicular antenna Check vehicular antenna coax line Check vehicular antenna connector Check for proper antenna mounting

10. CHARGING CURRENT ADJUSTMENT

When any component in the current limiter circuit is replaced, the "Converta-Com" Console charging current should be readjusted.

a. Required Test Equipment and Parts

(1) A 0.1Ω ± 1%; ½W resistor.
(2) A digital voltmeter with a 0 to 0.1V range (isolated ground).
(3) A dc power supply with 13.8Vdc at 2 amperes minimum output.
(4) Right-angle adjustment tool (Motorola part no. NLN5172A).

b. Procedure

(1) If an option board is used, unplug J6 and J7 from the connector board.
(2) Slide the option board up and away from the chassis.
(3) Reconnect J6 to P6 on the connector board.
(4) Locate the red-yellow wire connected to the terminal strip on the console pocket (See Figure 11). Unsolder the wire from the terminal strip.
(5) Solder the 0.1Ω resistor between the terminal strip and the red-yellow wire.
(6) Locate the two red-blue wires (J9-1, J9-2) connected between P9-1, P9-2 of the charger board and pocket switch S1, and unplug a red-blue wire from the charger board.
(7) Connect the digital voltmeter across the 0.1Ω resistor and set its range switch to 0.1V.
(8) Insert an "omni" radio into the console pocket and turn on the radio.
(9) Connect the power cable of the console (red wire to A+ and black wire to A−) to the power supply and adjust its output for 13.8Vdc.
(10) Connect the ignition switch lead (orange) of the console power cable to the positive terminal of the power supply.
(11) The digital voltmeter should indicate 0.02Vdc. If not, use a right-angle tuning tool and adjust R109 on the charger board for a reading of 0.02Vdc as indicated on the digital voltmeter (See Figure 11).
(12) Locate the red-blue wire disconnected in step (6) and plug it back into the charger board.
(13) Adjust R110 on the charger board for a 0.04Vdc.
(14) Remove the portable radio from the console. Disconnect the console from the power supply, and remove the 0.1Ω resistor. Reconnect the red-yellow wire to the terminal strip, and reinstall the option board (if used).

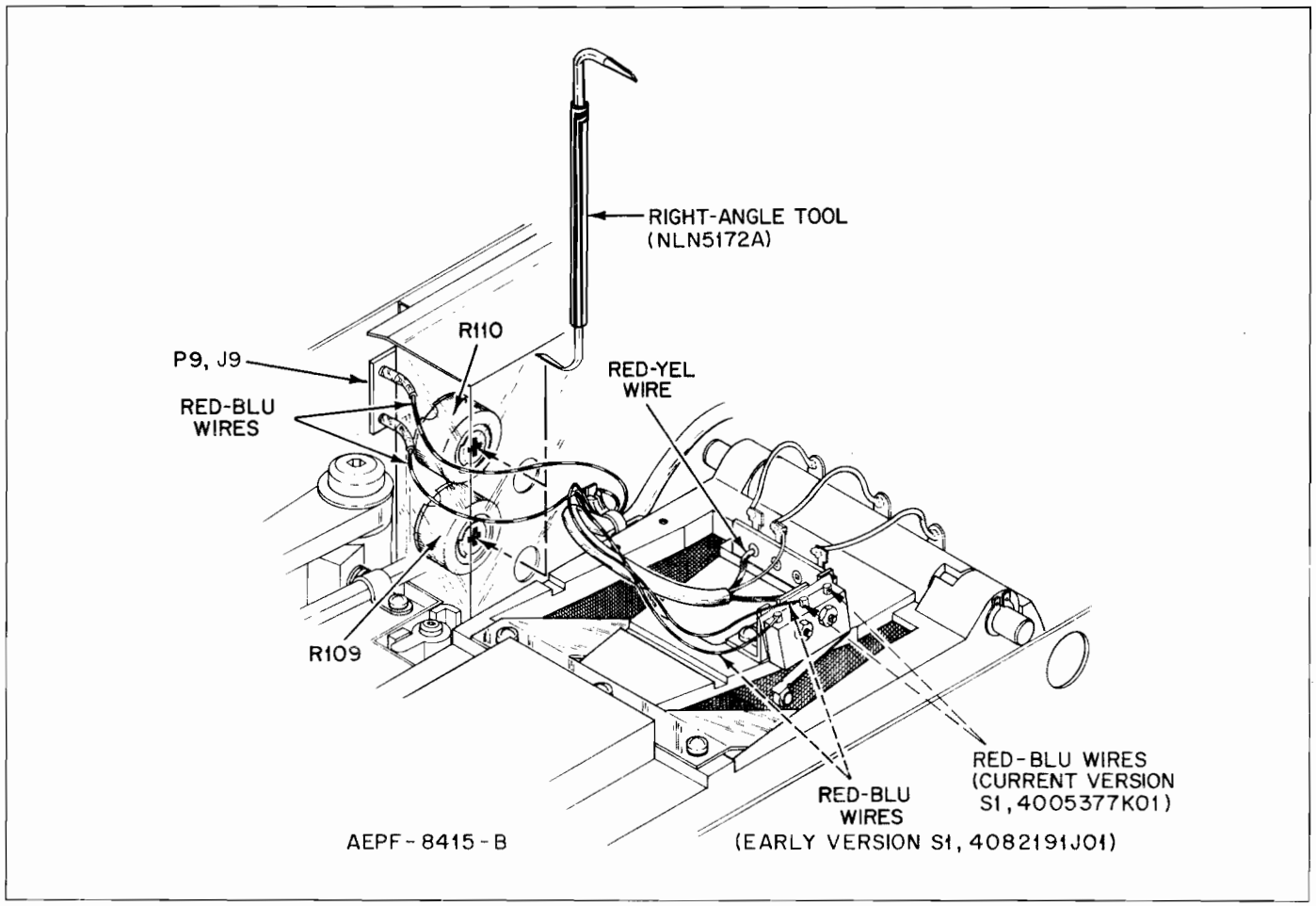

Figure 11. Charging Current Adjustment—Wire Location Detail

PREVENTIVE MAINTENANCE

1. PERIODIC INSPECTIONS

a. Slow degradation in equipment performance if left uncorrected can lead to costly equipment down-time along with costly console repair. Preventive Maintenance (PM) differs from corrective maintenance in that minor equipment operating deficiencies can be corrected before breakdown occurs. Periodic and systematic PM inspection schedules should be set up to keep the equipment operational and failure free. The frequency of PM schedules will be determined by the operating environment where the equipment is being used. The periodic inspection should include:

- Visual inspection of cables for frayed or oxidized leads.
- Battery connections should be free from oxidation and corrosion.
- Check external roof-top antenna for clean and rust-free mounting.
- Check for tight connection of console-to-antenna cable connector.
- Check system ground lead (black) for clean and proper electrical contact.
- J4 (P4), J3 (P3), J2 (P2), J1 (P1) should be checked for tightness and good electrical pin contact. Pins should be visually checked for wear.
- Check for loose components, component assemblies, and mechanical assemblies for tight and secured installation. The majority of console failures is directly related to poor installation.
- Inspect all mounting brackets and associated mounting screws for secure and tight console mounting.
- Check for overheated or discolored components.
- Check for proper (13.8Vdc) vehicular alternator charging. Vehicular voltage can vary from as low as 12.9Vdc to as high as 16 or 18Vdc without the operator ever noticing any vehicular defect, but it can affect the rated console operation.
- Visually check the unit for signs of damage.
- Inspect lock (item 12) for proper alignment. Retrofit kit RPX4634A may be installed to insure proper alignment.
- Inspect pocket for proper bezel alignment.
- Remove outer cover (item 1) and check all hardware for tightness, observing the torque specifications shown on the Mechanical Parts Detail diagram.
- Inspect cam area for wear; see Figure 12. The cam area should not be grooved or worn out in excess of 1/64". If the actuator cam area is worn excessively, the actuator should be replaced.
- Inspect the gold contact pins (Iitems 141, 142, and 143) for excessive wear and insufficient contact pressure by checking the spring resiliency (items 140 and 144).
- Inspect battery contacts (item 73) for excessive wear, misalignment, and spring resiliency.

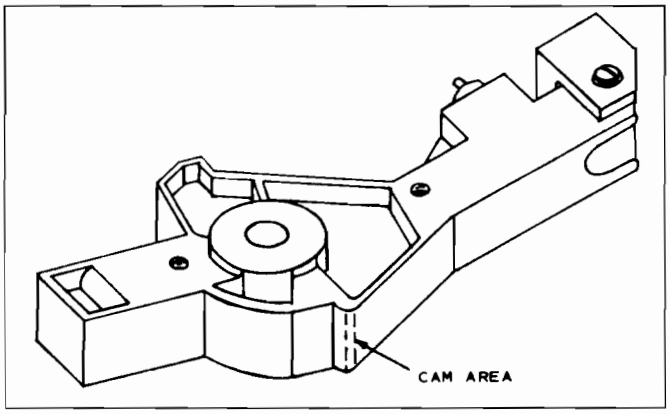

Figure 12. Actuator Contact Assembly

- Inspect battery block springs (item 75). Make sure that screw depth (item 74) allows the spring to pivot freely.
- Pay special attention to items 7, 15, 16, 80, 11, 14, 34, 136, and 145. If item 145 is not accessible, drill a 13/32" access hole below it.

  NOTE: When drilling the hole, take all necessary precautions against metallic shavings dropping into the console.
- Inspect locator pin (item 134) for wear; if necessary, remove retaining ring (item 131) using retainer ring pliers. Remove old locator pin (item 134) and discard. Install new locator pin (P/N4705611H01) and retaining ring.
- Check the adjustment of the actuator mechanism by inserting a universal radio and checking the seven spring-loaded contact pins to see if they have all been depressed (the retaining rings should be slightly off the bushings). The two small pins in the front should be depressed .032" minimum, and the insertion force to lock the radio into the console must be less than 50 pounds. If this is not the case, the unit requires adjustment.
- Check for the presence of a spacer washer between items 12 and 13 on the lock assembly. If spacer washer is not present, install spacer washer (item 98) and longer screw (item 14).
- The console should be lubricated using white grease, at the points indicated in the Mechanical Parts Detail diagram. Be sure to lubricate the pawl arm (item 119) at wear surfaces.

2. LUBRICATION AND TORQUE PROCEDURES

To ensure optimum performance of the console, it is also necessary to periodically perform certain lubrication and torque procedures of the various mechanical parts. These procedures should be performed whenever routine maintenance is performed on the console. The various points to be lubricated and/or torqued are depicted by legend symbols placed adjacent to the numerical callouts shown on the Mechanical Parts Detail diagram. Each symbol signifies a specific lubrication or torque procedure to be performed on that particular mechanical piece part as follows:

★ Loctite on Threads (Loctite 242)
⊘ Lubricant on Shaft or wear surface
△ Torque in in-lbs (± 20%)

3. ADJUSTMENT OF PAWL ARM WITH SAFETY WIRE

a. Procedure

(1) Remove the housing cover, and loosen the four pocket screws (item 80).

(2) Insert a universal radio into the console; this should shift the pocket to the far right side of the console within the constraints of the four pocket screws (step 1).

(3) Tighten the three exposed screws (item 80). One screw under the contact arm is not exposed.

(4) Eject the radio from the console pocket.

(5) Tighten the fourth pocket screw.

(6) Remove safety wire.

(7) All bolts should be tightened observing the torque specifications (100 in. lbs. for items 117 and 124) as shown in Mechanical Parts Detail.

(8) Turn the adjustable bushing (item 100), using tool 6605746J01, in both directions and observe the corresponding motion of the actuator pawl arm. Adjust the bushing to the starting position as indicated.

(9) Reinsert radio with volume turned up to an audible level in an unsquelched mode.

(10) Turn the adjustable bushing **slowly** counterclockwise, until the contact arm is pushed-in sufficiently into the side connector to break electrical contact and disrupt audio signal. Key the PTT switch, and monitor the rf output at the antenna jack.

(11) Looking through the hole in the front of the chassis (remove L.E.D. board and bracket, item 8); see Figure 13. Check to see if the seven spring-loaded contact pins have all been depressed (the retaining rings should be slightly off the bushings). Continue turning the adjustable bushing slowly counterclockwise, until the two large pins in the back have been depressed .032″ (use .032″dia. wire as a guage).

(12) If there is not enough adjustment left in the bushing due to wear, replace the worn pawl arm, actuator arm, or both, as necessary.

(13) Noting the positions of the two safety wire holes in the shoulder bolt (Part No. 0305126F13), determine which hole most nearly lines up with a slot in the adjustable bushing. Turn the bushing in the direction required to better align the slot with the hole.

(14) Thread the safety wire through the slot in the bushing and the hole in the bolt to prevent the bushing from turning.

(15) Check for intermittent contact by pushing the radio to the far right of the pocket and try pulling the contact arm away from the side connector of the radio. If the contact is intermittent, tighten the bushing (counterclockwise) to align the other hole with the nearest slot, and insert the safety wire.

(16) Eject and reinsert the radio several times, checking for smooth operation. If the insertion force is too high, (50 lbs. max.) or if the radio will not go in at all, remove the safety wire, turn the adjustable bushing back (clockwise) to align the other hole with the nearest slot; insert the safety wire, see step 15; and repeat steps 16 and 17, making observations for intermittent or excessive insertion force.

(17) If the console under test has had the safety wire installed, then proceed to step 21; otherwise proceed to step 19.

(18) Remove and discard the wire clip (item 129) located at the rear of the actuator contact arm (item 132). Do not confuse this with the wire clip located at the front of the actuator contact arm (see Figure 13).

(19) Using a nylon cable strap, attach the cable harness of step 19 (as shown in Figure 13).

(20) To safety wire the bolts, use needle-nose pliers to pull half the length of the wire through from the adjustable bushing and shoulder bolt (screw A in Fig. 14) so that both ends are of equal length.

(21) Start the first clockwise twist in the pair of wires by hand in the 30° region shown in Fig. 14. Uisng safety wire pliers (6605942M01), complete the clockwise twist between screw A and screw B such that the last twist occurs ½″ to ¾″ from the centerline of screw B, as shown in Fig. 14.

(22) Insert one wire through screw B, and resume twisting of wire pair by repeating the hand twist procedure used in step 21 at a point ¼″ to ½″ from the end of the first twist. Using safety wire pliers, complete the clockwise twist such that the last twist occurs at the perpendicular line "AA" shown in Details A, B and C of Fig. 14.

(23) Insert one wire through screw C within the 90″ region shown in Detail A. Where only a single through hole screw is used, refer to Details B and C which shows the additional 45″ safety wire entrance area.

(24) Tighten the safety wire by pulling both ends towards the wall of the "Converta-Com" Console chassis. Hand start a clockwise twist and, using the safety wire pliers, add an additional five twists, minimum. Clip off and discard the excess wire. Bend the five-twist wire length against screw C to eliminate the safety danger posed by protruding lengths, of sharp wire.

(25) Recheck .032″ pin adjustment.

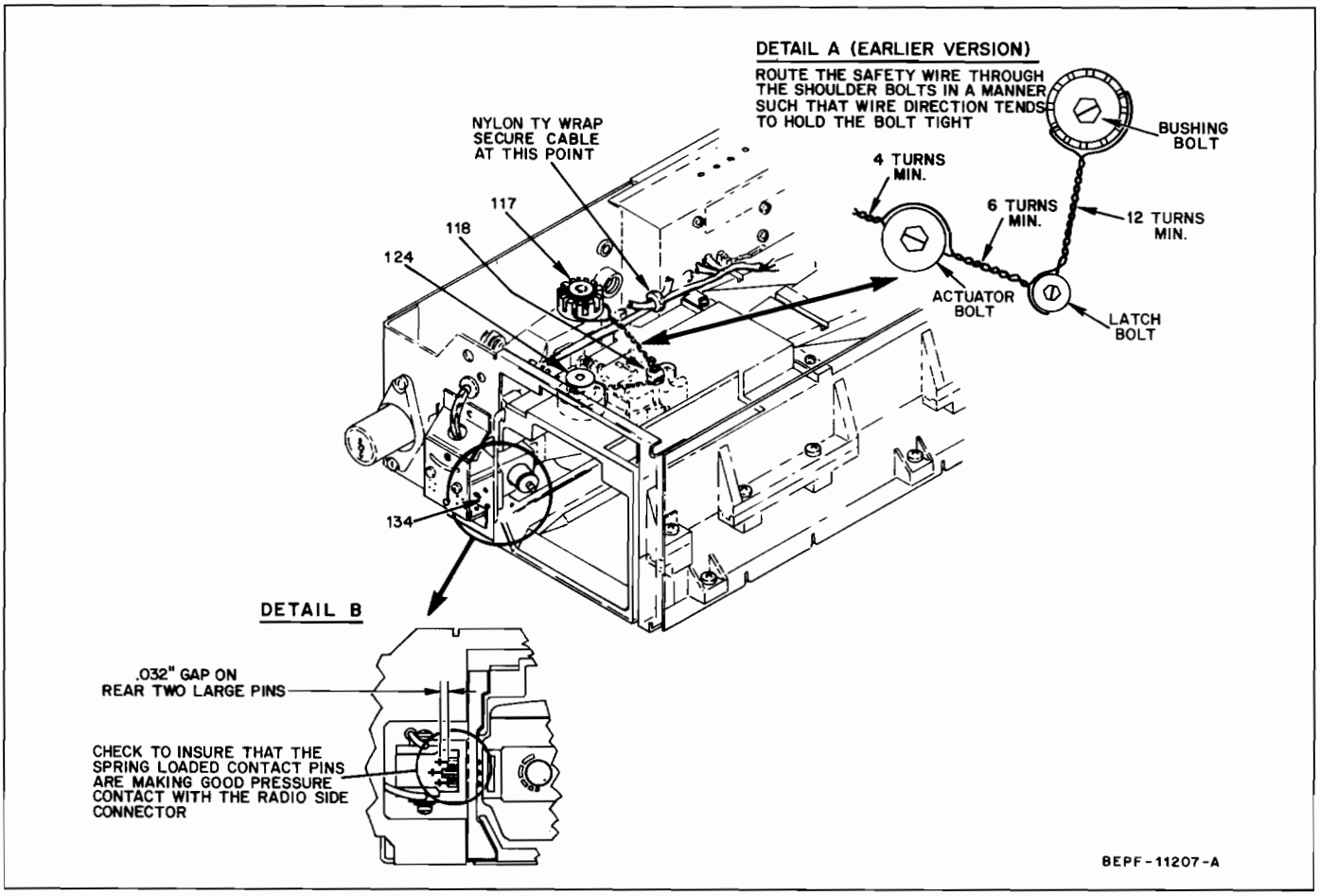

Figure 13. Pawl Arm and Safety Wire Installation Detail

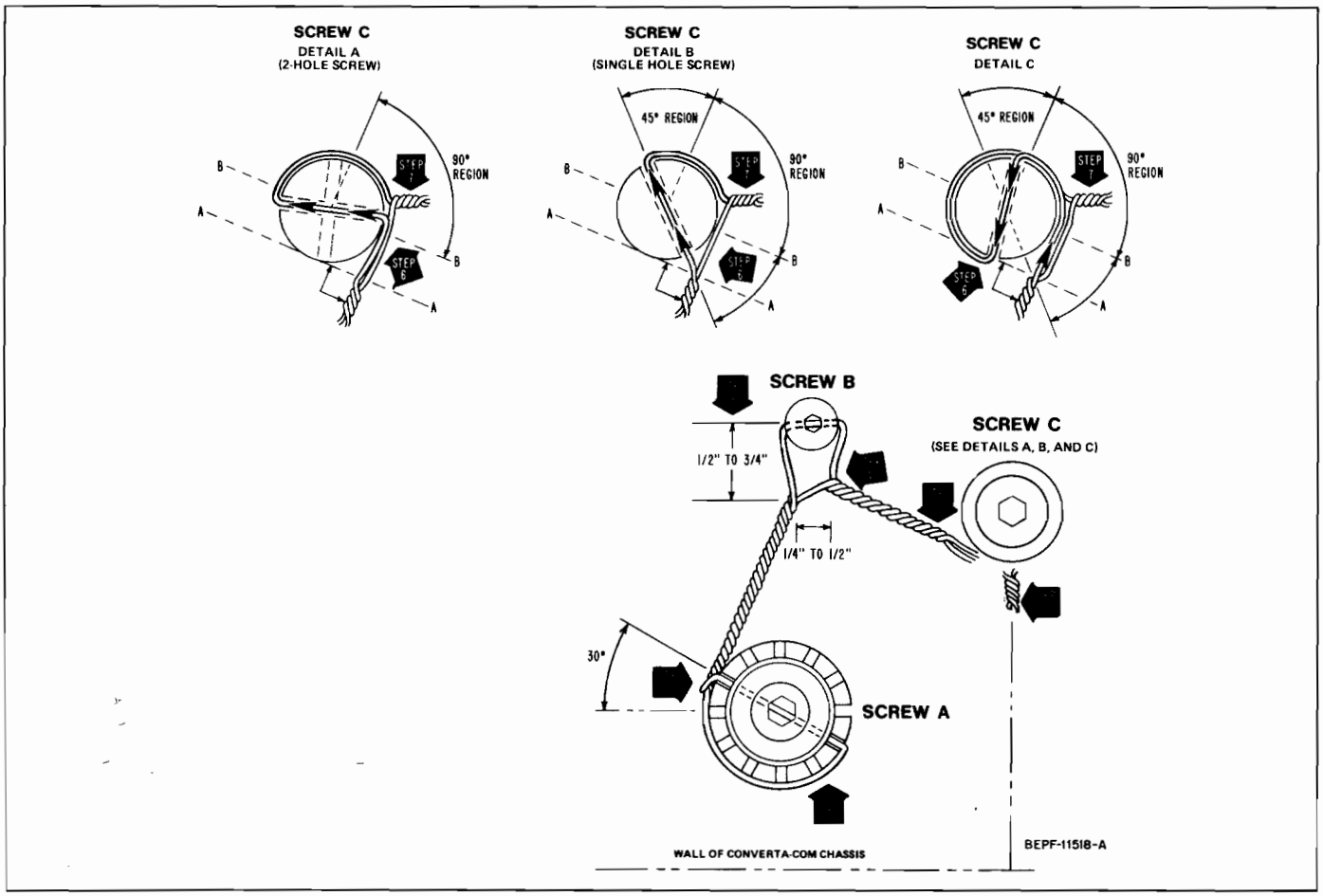

Figure 14. Pawl Arm and Safety Wire Detail

b. Updating Actuator Assembly To Latest Specifications

During the early part of 1986, the actuator assembly was redesigned to eliminate the safety wire locking mechanism. The new assembly can be retrofit in its entirety by ordering and installing a new actuator assembly (part no. 0105953D14).

4. ADJUSTMENT OF PAWL ARM WITH LATEST, NON-SAFETY WIRE DESIGN

a. Procedure

Follow procedures (1) thru (17) outlined in section 3./a. ADJUSTMENT OF PAWL ARM WITH SAFETY WIRE. If the unit has not had the safety wire adjustable pawl arm installed, observe procedures (19) and (20). Substitute cotter pin for safety wire. Add procedure 17a: Bend cotter pin as indicated in Figure 16.

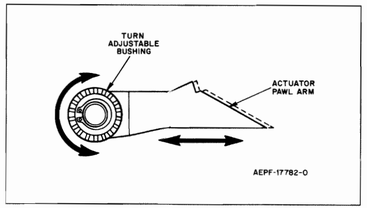

Figure 15. Bushing Adjustment Detail

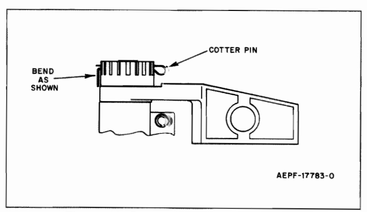

Figure 16. Cotter Pin Installation Detail

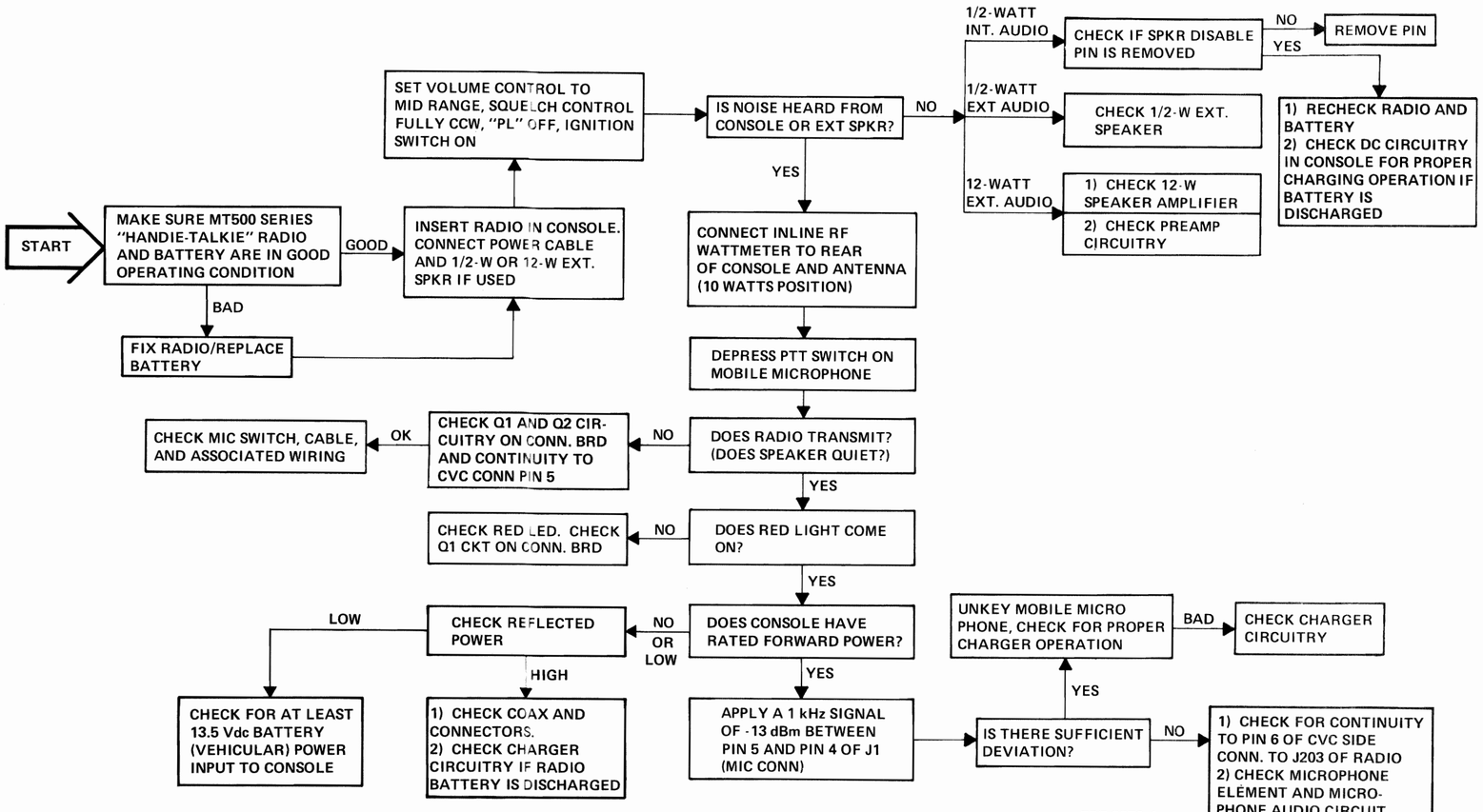

CHARGER BOARD

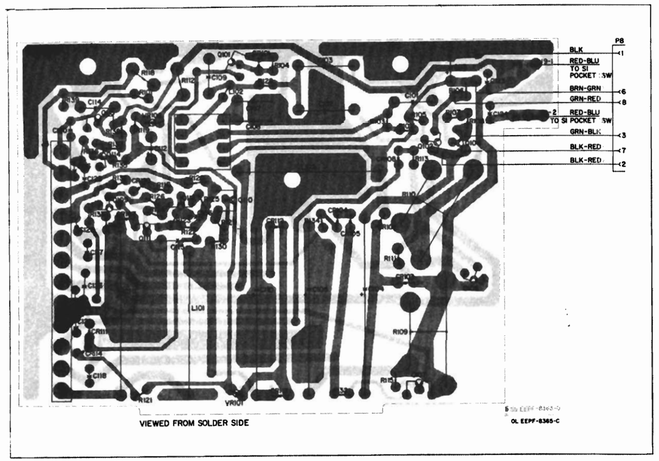

LED BOARD

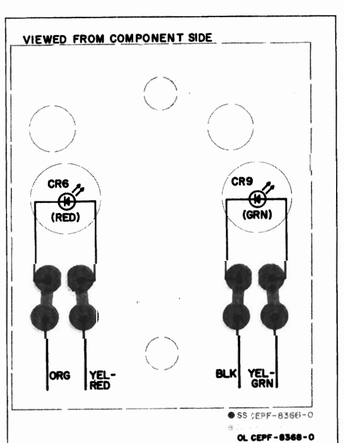

CONNECTOR BOARDS

(EARLY VERSION)

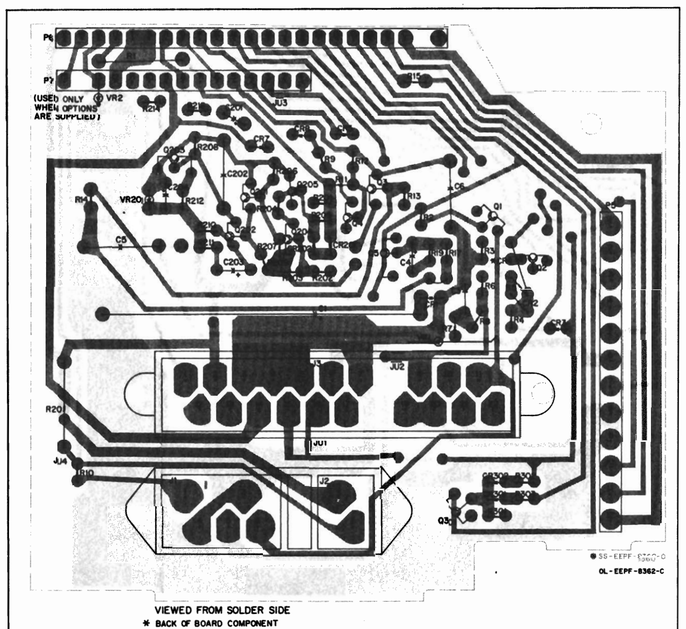

(CURRENT VERSION)

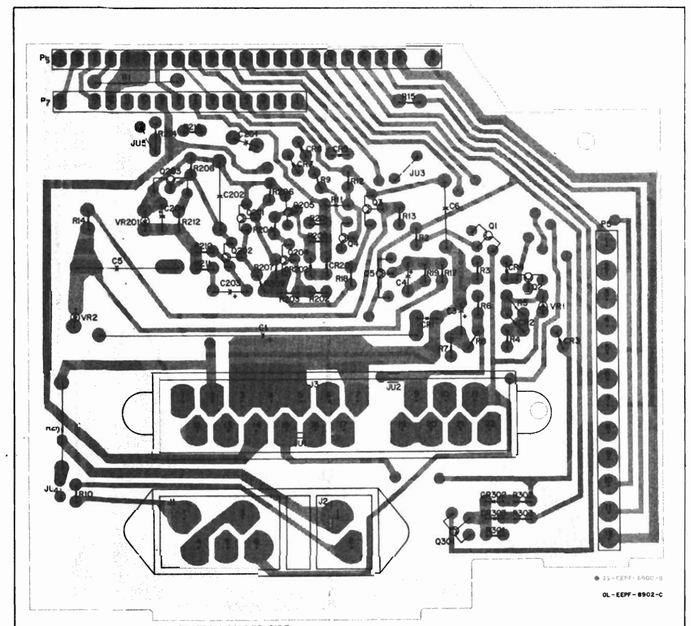

VOLTAGE MEASUREMENTS

CONNECTOR BOARD DC VOLTAGE MEASUREMENTS

1. ITEMS REQUIRED:
   a. UNIVERSAL,"OMNI" OR "SLIM-LINE," MT500 RADIO
   b. MT500 BATTERY
   c. DC VOLTMETER
   d. DC POWER SUPPLY–13.8Vdc @ 6A.
2. CONNECT CONSOLE TO THE DC POWER SUPPLY AND SET IT TO SUPPLY 13.8Vdc @ 6A.
3. PLACE MT500 RADIO INTO CONSOLE AND MAKE THE FOLLOWING DC VOLTAGE MEASUREMENTS.

	Q301		Q1			Q2				Q203
	C	B	E	B	C	E	B	C	J3-9	E
IGNITION SWITCH OFF	13.8	.05	-	-	-	-	-	-	-	.3
IGNITION SWITCH ON	.1	.7	-	-	-	-	-	-	-	.3
RADIO OFF	-	-	-	-	-	-	-	-	-	.3
RADIO ON	-	-	12.8	13.1	23.3	23.3	22.7	22.3	13.5	5.7
EXTERNAL MIC. PTT SWITCH CLOSED	-	-	.3	1.0	.33	0.3	1.1	0.4	-	-

4. IF THE CONSOLE IS EQUIPPED WITH THE 12W AMPLIFIER-SPEAKER, MAKE THE FOLLOWING DC VOLTAGE MEASUREMENTS.

	Q204		Q205			Q4	Q3		Q5
	B	C	C	B	E	C	E	B	B
IGNITION SWITCH OFF	0.8	0.1	9.0	12.3	13.0	-	-	-	-
RADIO ON; OPEN SQUELCH; MIN. AUDIO	-	-	-	-	-	13.5	4.4	4.9	4.9
RADIO ON; SQUELCHED	-	-	-	-	-	0.1	0	0	0

EPF-8416-B

CHARGER BOARD DC VOLTAGE MEASUREMENTS

1. ITEMS REQUIRED:
   a. UNIVERSAL,"OMNI," MT500 RADIO
   b. MT500 BATTERY
   c. DC VOLTMETER
   d. DC POWER SUPPLY–13.8Vdc @ 6A.
2. CONNECT CONSOLE TO THE DC POWER SUPPLY AND SET IT TO SUPPLY 13.8Vdc @ 6A.
3. PLACE MT500 RADIO INTO CONSOLE AND MAKE THE FOLLOWING DC VOLTAGE MEASUREMENTS.

		Q108	Q110	Q111	Q112	Q109			Q114
	U101-1	E	C	B	C	C	B	E	C
NO RADIO IN CONSOLE	.1	28.0	0.95	1.48	1.40	1.25	1.39	0.74	22.5
FAST CHARGE	.1	23.0	19.1	0.19	0.12	22.0	0.2	0.74	.23
SLOW CHARGE	.1	24.0	18.5	1.6	15.3	0.8	1.6	0.8	24.0

EPF-8359-O

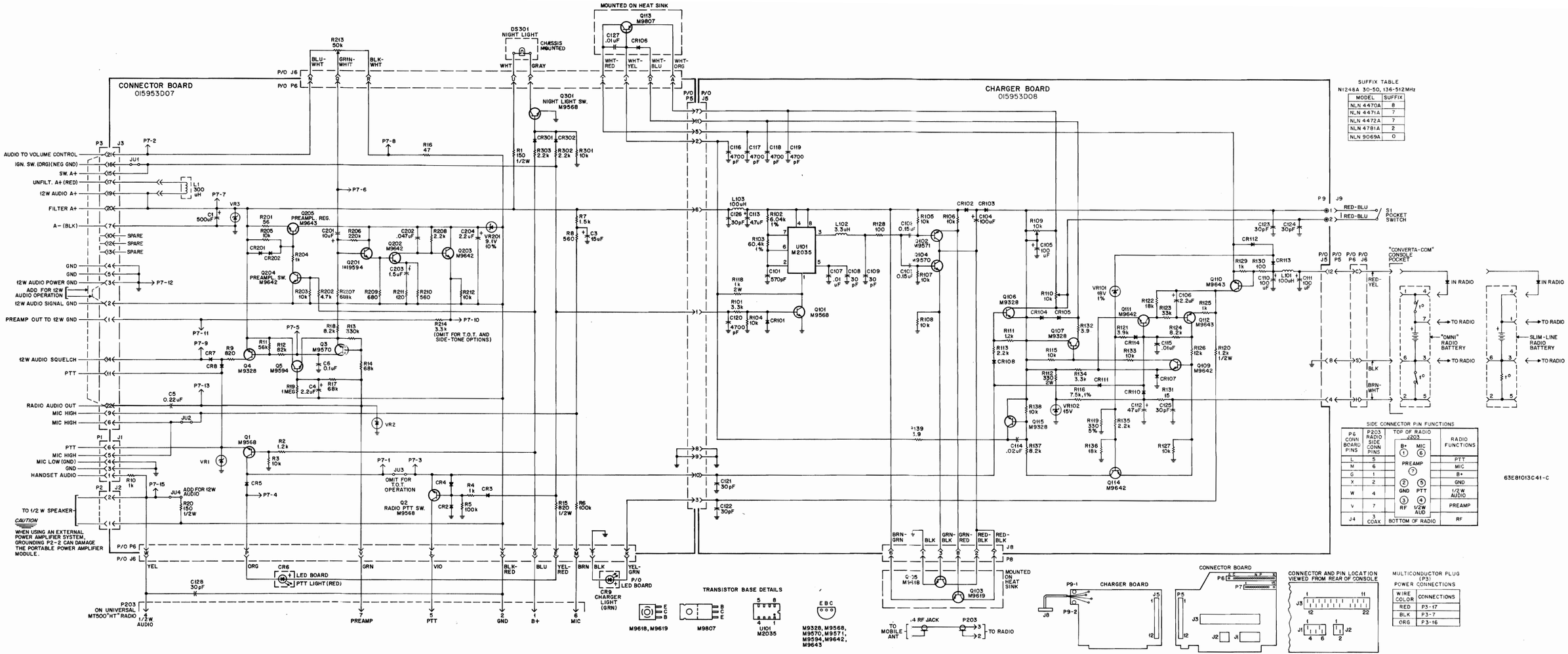

SUFFIX TABLE
N1248A 30-50, 136-512 MHz

MODEL	SUFFIX
NLN 4470A	8
NLN 4471A	7
NLN 4472A	7
NLN 4781A	2
NLN 9069A	0

SIDE CONNECTOR PIN FUNCTIONS

P6 CONN BOARD PINS	P203 RADIO SIDE CONN PINS	TOP OF RADIO J203	RADIO FUNCTIONS
L	5	B+ (1), MIC (6), PREAMP (7)	PTT
M	6		MIC
G	1		B+
X	2	GND (2), PTT (5)	GND
W	4		1/2 W. AUDIO
V	7	RF (3), 1/2W AUD (4)	PREAMP
J4	3 COAX	BOTTOM OF RADIO	RF

MULTICONDUCTOR PLUG (P3)
POWER CONNECTIONS

WIRE COLOR	CONNECTIONS
RED	P3-17
BLK	P3-7
ORG	P3-16

N1248A "CONVERTA-COM" CONSOLE
Electrical Parts List

TPLF-1363-C

REFERENCE SYMBOL	MOTOROLA PART NO.	DESCRIPTION
		CAPACITOR, Fixed: uF ± 20%; 20V unless stated
C1	2383210A19	500
C3	2382397D04	15; 15V
C4	2382397D19	2.2; 10V
C5	0882096J30	0.22 ± 10%; 250V
C6	0882096J29	0.1 ± 10%; 100V
C101	2182633E17	570pF ± 5%; 100V
C101, 102	0882905G05	0.15; 50V
C104, 105	2382077C01	100; 35V
C106	2383441B12	2.2; 6V
C107	2182428B12	0.01 − 20 + 80%; 100V
C108, 109	2182133C75	30pF ± 5%; 100V
C110, 111	2382077C01	100; 35V
C112	2383441B32	47
C113	2382256J01	− 10 + 50%; 47; 29V
C114	2182428B18	0.02
C115	2184008H16	0.01 ± 0.05%
C116 thru 120	2182213E06	4700pF; 100V
C121 thru 125	2182358G95	30pF ± 10%; 100V
C126	2182213E06	4700pF; 100V
C127	2182428B59	0.01uF − 20 + 80%; 200V
C128	2182358G95	30pF ± 10%; 100V
C201	2382256J03	10; 25V
C202	0882096J31	0.047 ± 10%; 250V
C203	2383441B14	1.5
C204	2382397D19	2.2; 10V
		DIODE: See Note
CR2 thru 5	4883654H01	Silicon
CR6	4805776D01	LED, Red
CR7, 8	4883654H01	Silicon
CR9	4805776D02	LED, Green
CR101	4883654H01	Silicon
CR102, 103	4885648E01	Fast Switching
CR104 thru 106	4882466H13	Silicon
CR107, 108	4883654H01	Silicon
CR109	4805776D02	LED
CR110, 111	4883654H01	Silicon
CR112, 113	4882466H13	Silicon
CR114	4883654H01	Silicon
CR201, 202	4883654H01	Silicon
CR301, 302	4883654H01	Silicon
		ZENER DIODE: See Note
VR1, 2	4882256C58	39V Zener
VR3	4805746G19	22V Zener
VR101	4883461E33	18V Zener
VR102	4882256C59	15V Zener
VR201	4882256C18	9.1V Zener
		LAMP:
DS301	6583479E01	Indicator
		JACK:
J1,2,3	2905260D02	CONNECTOR, Terminal
J4	0982442E01	CONNECTOR, Coaxial
J5	0905340E08	CONNECTOR, Female; 12-contact
J6	0905259D20	CONNECTOR, Female; 23-contact (terminals part no. 2905260D02)
J8	0105953D24	CONNECTOR, Female; 8-contact
		COIL:
L1	2582180B01	CHOKE, Filter
L101	2400848627	100uH CHOKE
L102	2482549D35	3.3uH CHOKE
L103	2400848627	100uH CHOKE
		PLUG:
P1	0184135C01	ASSEMBLY, Cable & Connector
P5	2805310F11	CONNECTOR, Male; 12-contact
P6	2805309F44	CONNECTOR, Male; 23-contact
P7	2805309F28	CONNECTOR, Male
P9-1, P9-2	9083445D01	CONNECTOR, Male
		TRANSISTOR: See Note
Q1, 2	4800869568	NPN; Type M9568
Q3	4800869570	NPN; Type M9570
Q4	4800869328	PNP; Type M9328
Q5	4800869594	NPN; Type M9594
Q101	4800869568	NPN; Type M9568
Q102	4800869571	PNP; Type M9571
Q103	4800869619	PNP; Type M9619
Q104	4800869570	NPN; Type M9570
Q105	4800869618	NPN; Type M9618
Q106, 107	4800869328	PNP; Type M9328
Q109	4800869642	NPN; Type M9642
Q110	4800869643	PNP; Type M9643
Q111	4800869642	NPN; Type M9642
Q112	4800869643	PNP; Type M9643
Q113	4800869807	PNP; Type M9807
Q114	4800869642	NPN; Type M9642
Q115	4800869328	PNP; Type M9328
Q201	4800869594	NPN; Type M9594
Q202 thru 204	4800869642	NPN; Type M9642
Q205	4800869643	PNP; Type M9643
Q301	4800869568	NPN; Type M9568
		RESISTOR, Fixed: Ω ± 5%; ¼W unless stated
R1	0600125C29	150 ± 10%; ½W
R2	0611009C51	1.2k
R3	0611009C73	10k
R4	0611009C49	1k
R5, 6	0611009C97	100k
R7	0611009C53	1.5k
R8	0611009C43	560
R9	0611009C47	820
R10	0611009C49	1k
R11	0611009C91	56k
R12	0611009C95	82k
R13	0611009D10	330k
R14	0611009C93	68k
R15	0600125C47	820 ± 10%; ½W
R16	0600124C17	47
R17	0611009C93	68k
R18	0611009C71	8.2k
R19	0611009D22	1 Meg.
R20	0600125C29	150 ± 10%; ½W
R101	0611009C61	3.3k
R102	0683175C86	6.04k ± 1%
R103	0683175C64	60.4k ± 1%
R104 thru 108	0611009C73	10k
R109, 110	1805821E01	Pot., 10k
R111	0611009C51	1.2k
R112	0600127C37	330 ± 10%; 2W
R113	0611009C57	2.2k
R115	0611009C73	10k
R116	0683175C89	7.5k ± 1%
R118	0600127C49	1k ± 10%; 2W
R119	0611009C37	330
R120	0600125C51	1.2k ± 10%; ½W
R121	0611009C63	3.9k
R122	0611009C79	18k
R123	0611009C85	33k
R124	0611009C71	8.2k
R125	0611009C49	1k
R126	0611009C75	12k
R127	0611009C73	10k
R128	0611009C25	100
R129	0611009C49	1k
R130	0611009C25	100
R131	0611009C05	15
R132	0600124B59	3.9
R133	0611009C73	10k
R134	0611009C61	3.3k
R135	0611009C57	2.2k
R136	0611009C79	18k
R137	0611009C71	8.2k
R138	0611009C73	10k
R139	0600124B57	3.9
R201	0600124C19	56
R202	0611009C65	4.7k
R203	0611009C73	10k
R204	0611009C49	1k
R205	0611009C73	10k
R206	0611009D06	220k
R207	0611009C93	68k
R208	0611009C57	2.2k
R209	0611009C45	680
R210	0611009C43	560
R211	0600124C27	120
R212	0611009C73	10k
R213	1805708D02	Pot., 50k ± 20%
R214	0611009C61	3.3k
R301	0611009C73	10k
R302, 303	0611009C57	2.2k
		SWITCH:
	4005377K01	
S1	4082191J01	SPDT, Snap-action
		INTEGRATED CIRCUIT:
U101	5184320A35	Timer; Type NE555V

NONREFERENCED ITEMS		
	0105953D08	CIRCUIT BOARD; Charger
	0105953D07	CIRCUIT BOARD; Connector
	0105953D09	CIRCUIT BOARD; LED

NOTE: For optimum performance, order replacement diodes and transistors by Motorola part number only.

NLN4730A TIME-OUT TIMER
SCHEMATIC DIAGRAM

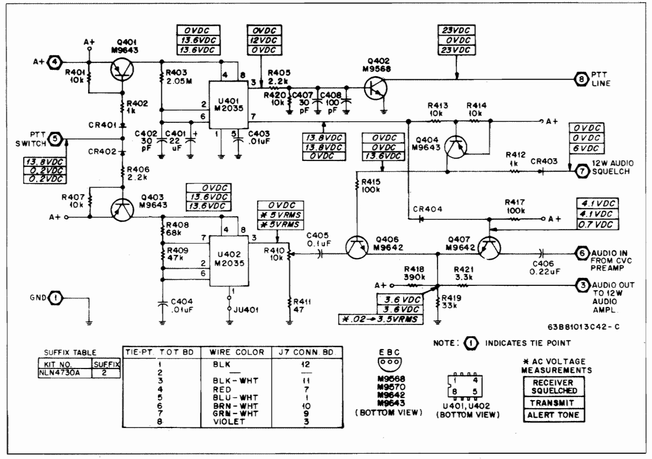

BACK-DATING INFORMATION

KIT AND SUFFIX NO.	REFERENCE SYMBOL	CHANGE
NLN4470A	CR4	WAS Located Q2 emitter and J5 pin 10
	Q2	WAS 4800869643, Type M9643
	R5, 111	WERE 0600124C73, 10kΩ
	R113	WAS 0600124C59, 2.7kΩ
NLN4470A-1	CR4	Relocated to Q2 emitter & base
NLN4470A-2	C6	WAS 0882096J18, 0.1uF; 250V
NLN4471A-1	C202	WAS 0882096J04, 0.47uF
NLN4472A-1	VR1	ADDED
NLN4470A-3 NLN4471A-2 NLN4472A-2	C116, 117, 118, 119, 120, 126	WERE 2182358G95, 30pF; 100%
NLN4470A-4 NLN4471A-3 NLN4472A-3 NLN4781A-1	R11	WAS 0600124C81, 22kΩ
NLN4470A-5	R208	WAS 0600124C57, 2.2kΩ
NLN4470A06 NLN4471A-4 NLN4472A-4	R214	WAS 0600124C71, 8.2kΩ
NLN4470A-7 NLN4471A-5 NLN4472A-5 NLN4781A-2	R136	WAS 0600124C73, 10kΩ
NLN4470A-8	VR2	Relocated VR2
NLN4471A-6	CR4	Reversed CR4
NLN4472A-6 NLN4781A-3	C113	WAS 2383441B32, 47uF
NLN4470A-9 NLN4471A-7 NLN4472A-7 NLN4781A-4	C113	WAS 2382256J01
NLN4470A-10	C107	WAS 2182428B12, 0.01; 100V
NLN4471A-8 NLN4472A-8	CR1	DELETED, WAS 4805349C01, WAS located in same location as VR3
NLN4781A-5	VR3	ADDED
NLN4470A-11 NLN4471A-9 NLN4472A-9 NLN4481A-6	AS SHOWN	

NLN4730A TIME-OUT TIMER
CIRCUIT BOARD DETAIL

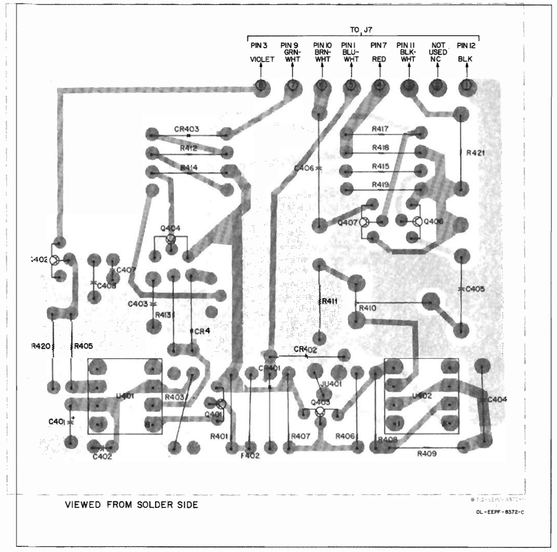

NLN4730A
TIME-OUT-TIMER

PLF-1365-B

REFERENCE SYMBOL	MOTOROLA PART NO.	DESCRIPTION
		CAPACITOR, Fixed: uF ± 10% 250V unless stated
C401	2383441B35	22 ± 10%; 20V
C402	2182358G95	30pF; N750
C403	2182428B59	0.01 − 20 + 80%; 200V
C404	0882096J27	0.01
C405	0882096J29	0.1;100V
C406	0882096J30	0.22;100V
C407	2182358G95	30pF; N750
C408	2182358G93	100pF; N750
		DIODE: See Note
CR401 thru 404	4883654H01	Silicon
		TRANSISTOR: See Note
Q401	4800869643	PNP; Type M9643
Q402	4800869568	NPN; Type M9568
Q403, 404	4800869642	PNP; Type M9643
Q405, 407	4800869642	NPN; Type M9642
		RESISTOR, Fixed: Ω ± 5%; ¼W unless stated
R401	0611009C73	10K
R402	0611009C49	1K
R403	1705787D02	2.05 Meg. ± 1%
R405, 406	0611009C57	2.2K
R407	0611009C73	10K
R408	0611009A93	68K
R410	1884944C03	Pot., 10K
R411	0611009C17	47
R412	0611009C49	1K
R413, 414	0611009C73	10K
R415, 417	0611009C97	100K
R418	0611009D12	390K
R419	0611009C85	33K
R420	0611009C73	10K
R421	0611009C57	3.9K
		INTEGRATED CIRCUIT:
U401, 402	5184320A35	Timer; Type SN555P

	MOTOROLA PART NO.	NONREFERENCED ITEMS
	0105953D05	ASSEMBLY, Board: includes: 0905259D01 CONNECTOR 2805353F01 PLUG, Key and Lead & Lug Assemblies
	4210217A02	STRAP, Tie
	8405248F01	CIRCUIT BOARD

NOTE: For optimum performance, order replacement diodes and transistors by Motorola part number only.

BACK-DATING INFORMATION

KIT AND SUFFIX NO.	REFERENCE SYMBOL	CHANGE
NLN4730A	C404	WAS 0882096J03: .01uF; 100%
	C405	WAS 0882096J18, 0.1uF; 100%
	C406	WAS 0882096J20, 0.22uF; 100%
NLN4730A-1	R421	Ref. Symbol Change, was C421
	R421	WAS 0600124C57, 2.2k
NLN4730A-2	AS SHOWN	

NLN4729A SIDE-TONE SWITCHING
NLN4731A SIDE-TONE SWITCHING & TIME-OUT-TIMER

PLF-1364-B

REFERENCE SYMBOL	MOTOROLA PART NO.	DESCRIPTION
		CAPACITOR, Fixed: pF ± 10% 250V unless stated
C501	0882096J29	0.1; 100V
C502	0882096J28	0.0056; 100V
C503	0882096J30	0.22; 100V
C504, 505	0882096J29	0.1; 100V
C506	2382397D19	2.2 ± 20%; 10V
C507	2182428B36	0.002; 200V
C508, 509	0882096J29	0.1; 100V
C510	2382397D12	0.12; 20V
C511	2182358G95	30pF; N750
C512	2383441B35	22; 20V
C513	2182358G95	30pF; N750
C514	2182358G93	100pF; N750
C515	0882096J27	0.01; 100V
C516	0882096J29	0.1; 100V
C517	0882096J30	0.22; 100V
C518	2182428B59	0.01 − 20 + 80%; 200V
		DIODE: See Note
CR501 thru 511	4883654H01	Silicon
		TRANSISTOR: See Note
Q501	4800869570	NPN; Type M9570
Q502, 503	4800869642	NPN; Type M9642
Q504	4800869643	PNP; Type M9643
Q505	4800869642	NPN; Type M9642
Q506	4800869643	PNP; Type M9643
Q507, 508	4800869642	NPN; Type M9642
Q509, 510	4800869643	PNP; Type M9643
Q511	4800869642	NPN; Type M9642
Q512	4800869643	PNP; Type M9643
Q513	4800869568	NPN; Type M9568
Q514	4800869643	PNP; Type M9643
Q515, 516	4800869642	NPN; Type M9642
		RESISTOR, Fixed: Ω ± 5%; ¼W unless stated
R501	0611009C97	100K
R502	0611009C73	10K
R503	0611009C69	6.8K
R504	0611009C49	1K
R505	0611009C73	10K
R506	0611009C85	33K
R507, 508	0611009C73	10K
R509	0611009C65	4.7K
R510, 511	0611009C81	22K
R512	0611009C25	100
R513 thru 516	0611009C81	22K
R517	0611009C49	1K
R518	0611009D20	820K
R519	0611009C73	10K
R520	0611009D06	220K
R521	0611009C73	10K
R522	0611009D06	220K
R523, 524	0611009C97	100K
R525	0611009D06	220K
R526, 527, 528	0611009C97	100K
R529	0611009C81	22K
R530	0611009C51	1.2K
	or 0611009C59	2.7K (Side Tone Switching only)
R531	1884944C03	Pot., 10K
R532	0611009D06	220K
R533	0611009C49	1K
R534	1705787D02	2.05 Meg. ± 1%
R536	0611009C57	2.2K
R537	0611009C73	10K
R538	0611009A93	68K
R539	0611009A89	47K
R540	1884944C03	Pot., 10K
R541	0611009C17	47K
R542	0611009C97	100K
R543, 544	0611009C81	22K
R545	0611009C97	100K
R546	0611009D12	390K
R547	0611009C85	33K
R548	0611009C49	1K
R549	0611009C97	100K
R550	0611009C73	10K
		INTEGRATED CIRCUIT:
U501, 502	5184320A35	Timer; Type NE555V

NOTE: For optimum performance, order replacement diodes and transistors by Motorola part number only.

NLN4731A SIDE-TONE SWITCHING AND TIME-OUT TIMER CIRCUIT BOARD DETAIL

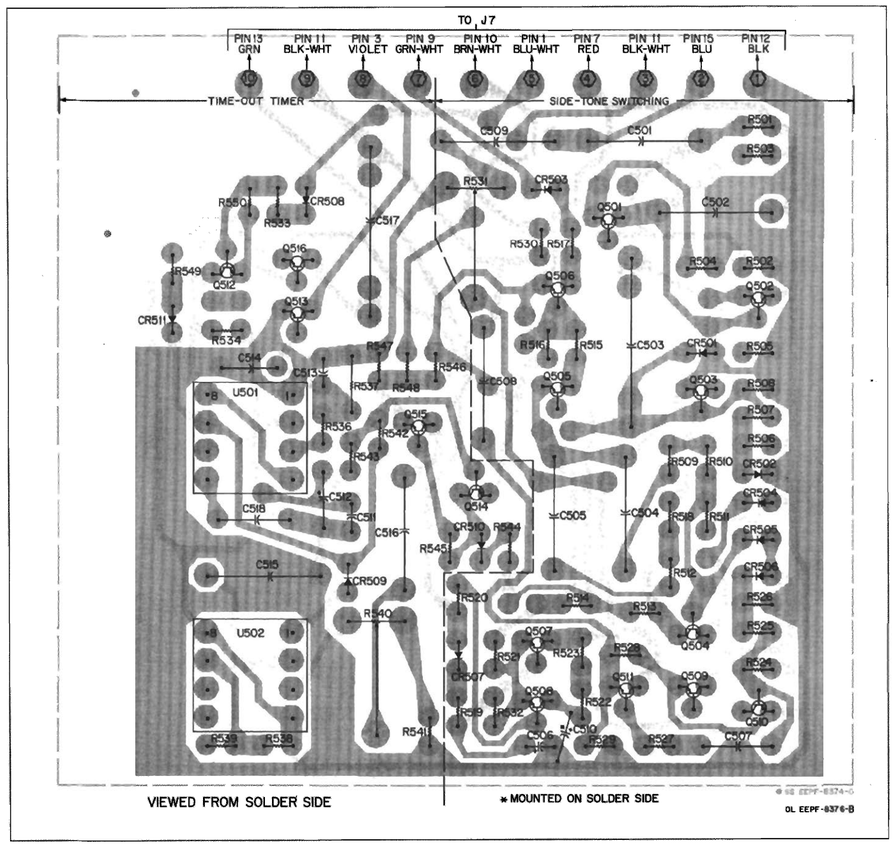

	MOTOROLA PART NO.	NONREFERENCED ITEMS
	0105953D01	ASSEMBLY, Cable (NLN4731A) includes: 0905259D01 CONNECTOR 2805353F01 PLUG, Key and Lead & Lug Assemblies
	0105953D03	ASSEMBLY, Cable (NLN4729A) includes: 0905259D01 CONNECTOR 2805353F01 PLUG, Key and Lead & Lug Assemblies
	0300120621	SCREW, Phillips; 4-40 × ¼"
	0300129676	SCREW, Phillips; 4-40 × ¼"
	0705250F01	BRACKET
	4210217A02	STRAP, Tie
	4684203F01	GUIDE
	8405558F01	CIRCUIT BOARD

BACK-DATING INFORMATION

KIT AND SUFFIX NO.	REFERENCE SYMBOL	CHANGE
NLN4729A	C501, 504, 505, C508, 509, 516	WERE 0882096J18, 0.1uF; 250V
	C502	WAS 0882096J07, .0056uF; 250V
	C503, 517	WERE 0882096J20, 0.22uF; 250V
	C515	WAS 0882096J03, .01uF; 250V
NLN4729A-1 NLN4731A-1	R530, 548	WERE 0600124C57, 2.2k
NLN4729A-2 NLN4731A-2		AS SHOWN

NLN4731A SIDE-TONE SWITCHING AND TIME-OUT TIMER SCHEMATIC DIAGRAM

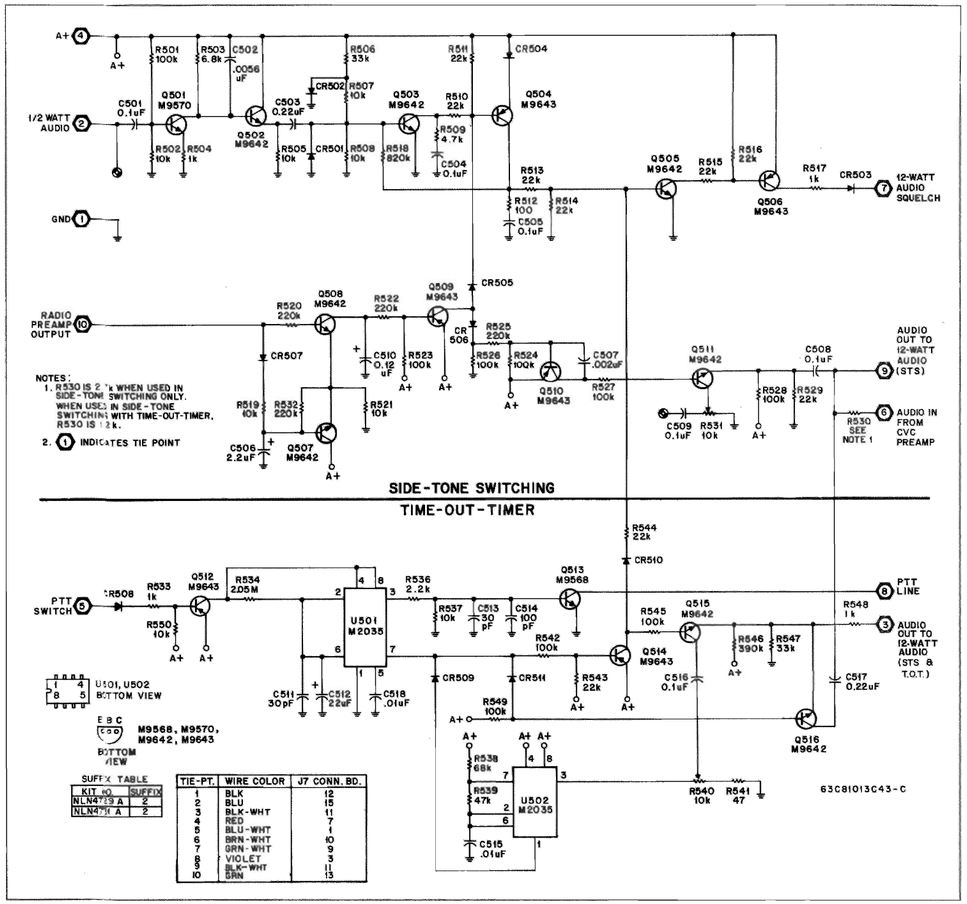

N1248A "CONVERTA-COM" CONSOLE
Mechanical Parts List

TPLF-1429-D

ITEM NO.	MOTOROLA PART NO.	NOMENCLATURE
1	1505669F01	COVER, Housing (for NLN4470A, NLN4471A, and NLN4472A)
	or 1505669F02	COVER, Housing, (for NLN4781A)
2	0405151F01	WASHER, Detent
3	0400007652	LOCKWASHER, Ext. tooth; #10
4	0305336F05	SCREW, Hex Driver; 10-32 × ⅜"
5	3805158F01	CAP, Cover
6	0105953D22	ASSEMBLY, Tray
7	0305336F05	SCREW, Hex Driver; 10-32 × ⅜"
8	0105953D10	ASSEMBLY, LED Bracket, does not include LED's
9	4210217A02	TIE, Cable
10	0400009777	LOCKWASHER, Split; #4
11	0300120621	SCREW, Phillips; 4-40 × ¼"
12	5505156F01	LOCK
13	3805149F01	BUTTON, Lock
14	0300138699	SCREW, Phillips; 4-40 × ⅜"
15	0300114820	SCREW, Hex Driver; 4-40 × 3/16"
16	0300120938	SCREW, Phillips; 4-40 × 5/16"
17	0400009777	LOCKWASHER, Split; #4
18	4105146F09	SPRING
19	1505157F01	HOUSING, Lock
20	3700010559	GROMMET, Rubber
21	1505154F01	HOUSING, Lamp
22	See Note	LAMP (DS301)
23	4205138F01	RETAINER, Spring
24	1405127F01	INSULATOR
25	0105953D23	ASSEMBLY, Insulator
26	0400114970	WASHER, Flat; #4
27	0400009777	LOCKWASHER, Split; #4
28	0300120938	SCREW, Phillips; 4-40 × 5/16"
29	1405157E03	TAPE, Insulating
30	0200001354	NUT, Hex; 4-40
31	2900005222	LUG, Solder
32	See Note	CONNECTOR, Coaxial (J4)
33	See Note	CHOKE (L1)
34	0300120938	SCREW, Phillips; 4-40 × 5/16"
35	0400009777	LOCKWASHER, Split; #4
36	1505194F01	POCKET, Bottom
37	1505191F01	POCKET, Top (NLN4470A,4471A,4472A)
	or 1505192F01	POCKET, Top (NLN4781A)
38	0405469F01	WASHER, Flanged
39	0200007019	NUT, Hex; ¼"
40	4105143F04	SPRING, Hold Down (NLN4470A,4471A, 4472A)
	or 4105439F01	SPRING, Hold Down (NLN4781A)
41	-----	Not Used
42	0300139987	SCREW, Phillips; 4-20 × 5/16"
43	3100131861	TERMINAL STRIP
44	-----	Not Used
45	0300139987	SCREW, Phillips; 4-20 × 5/16"
46	4705130F01	ROD, Pin
47	4210219A53	RING, Snap
48	4105142F01	SPRING, Hold Down (NLN4470A, 4471A, 4472A)
	or 4105440F01	SPRING, Hold Down (NLN4781A)
49	-----	Not Used
50	0300139987	SCREW, Phillips; 4-20 × 5/16"
51	0200001354	NUT, Hex; 4-40
52	4205571F01	CLIP
53	0410057A13	WASHER, Special
54	See Note	TRANSISTOR (Q113)
55	1405536E02	INSULATOR
56	0200120487	NUT, Hex; 2-56
57	0400002625	WASHER, Flat
58	2900118336	LUG, Solder
59	0200120487	NUT, Hex; 2-56
60	3100122887	TERMINAL STRIP
61	0300138012	SCREW, Phillips; 2-56 × 7/16"
62	0400002625	LOCKWASHER, Split; #2
63	0305662D01	SCREW, Captive; Phillips, 4-40
64	0400009777	LOCKWASHER, Split; #4
65	0300131979	SCREW, Phillips; 4-40 × 7/16"
67	0400007667	LOCKWASHER, Ext. tooth; #4
68	0300120938	SCREW, Phillips; 4-20 × 5/16"
69	3010151A38	WIRE, Safety
70	0705137F01	BRACKET, Switch
71	4505139F01	ASSEMBLY, Actuator (Early version only)
72	See Note	SWITCH (S1)
73	0105953D19	ASSEMBLY, Contact Actuator
74	0300131979	SCREW, Phillips; 4-40 × 7/16"
75	4105135F01	SPRING
76	4210219A53	RING, Snap
77	0300139075	SCREW, Phillips; 4-40 × ⅞"
78	0400009777	LOCKWASHER, Split; #4
79	4205491H01	CLIP, Spring
80	0300125482	SCREW, Phillips; 6-32 × ½"
81	0400009795	LOCKWASHER, Split; #6
82	0400001719	WASHER, Flat
83	0405469F01	WASHER, Flanged
84	0200007019	NUT, Hex; ¼"
85	0300139075	SCREW, Phillips; 4-40 × ⅞"
86	0400009777	LOCKWASHER, Split #4
87	0405469F01	WASHER, Flanged
88	0300120938	SCREW, Phillips; 4-40 × 5/16"
89	0400009777	LOCKWASHER, Split; #4
90	4684203F01	BLOCK, Slide
91	0705250F01	BRACKET
92	-----	Not Used
93	0300139987	SCREW, Phillips; 4-20 × 5/16"
94	4210217A02	STRAP, Cable
95	2805353F01	PLUG, Key
96	0105953D01	ASSEMBLY, Cable (NLN4731A)
	0905259D01	includes: CONNECTOR, PLUG, Key (Item 95), and Lead & Lug Assemblies, OR
	0105953D03	ASSEMBLY, Cable (NLN4729A)
	0905259D01	includes: CONNECTOR, PLUG, Key (Item 95), and Lead & Lug Assemblies
97	0300139987	SCREW, Phillips; 4-40 × 5/16"
98	0400001706	SPACER, Washer
99	0705363F01	BRACKET (NLN4470A,4471A,4472A) or
	0705438F01	BRACKET (NLN4781A)
100	4305517H01	BUSHING, Adjustable
101	0300139987	SCREW, Phillips; 4-20 × 5/16"
102	0105953D24	ASSEMBLY, Cable, includes:
	0905259D09	CONNECTOR, PLUG, Key (Item 103), and Lead & Lug Assemblies
103	2805353F01	PLUG, Key
104	0105953D15	ASSEMBLY, Cable (NLN4470A,4471A),
	0905259D20	includes: CONNECTOR, PLUG, Key (Item 103), and Lead & Lug Assemblies, OR
	0105957D80	ASSEMBLY, Cable (NLN4472A, 4781A),
	0905259D20	includes: CONNECTOR, PLUG, Key (Item 103), and Lead & Lug Assemblies
105	4305477F01	STAND-OFF
106	0300131979	SCREW, Phillips; 4-40 × 7/16"
107	0300131979	SCREW, Phillips; 4-40 × 7/16"
108	0400009777	LOCKWASHER, Split; #4
109	0300120938	SCREW, Phillips; 4-40 × 5/16"
110	1505468F01	COVER
111	1405157E03	INSULATOR
112	0405825C01	WASHER, Mica
113	See Note	TRANSISTOR (Q103, 105)
114	0400114970	WASHER
115	0400007667	LOCKWASHER, Ext. tooth; #4
116	0200001354	NUT, Hex; 4-40
117	0305126F13	BOLT, Shoulder, ⅜" × ⅝"
118	0305126F11	BOLT, Shoulder, 3/16" × ½"
119	4505589H01	PAWL ARM, Adjustable
120	4505150F01	LEVER, Actuator
121	4105113G01	SPRING
122	4505162F01	BASE, Actuator
123	2210133A26	PIN
124	0305126F09	BOLT, Shoulder, ⅜" × 1"
125	4105146F11	SPRING
126	0300130938	SCREW, Phillips; 4-40 × 5/16"
127	0400009777	LOCKWASHER, Split; #4
128	0400114970	WASHER, Flat
129	4282143C01	CLIP
130	4105146F15	SPRING
131	4210219A54	RING, Retaining
132	4505161F01	ACTUATOR CONTACT
133	4105146F01	SPRING
134	4705611H02	ROD, Locator
135	4205463E02	RETAINER, Ring; "C" clip
136	0300120900	SCREW, Phillips; 6-32 × 5/16"
137	0400009795	LOCKWASHER, Split; #6
138	0400001719	WASHER, Flat
139	0905160F01	CONTACT BLOCK
140	4105700F01	SPRING
141	4705140F01	ROD, Contacting
142	4705140F05	ROD, Contacting
143	4705140F03	ROD, Contacting
144	4105145F01	SPRING
145	0300120900	SCREW, Phillips; 6-32 × 5/16"
146	0400009795	LOCKWASHER, Split #6
147	0400001719	WASHER, Flat
148	4205463E01	RETAINER, Ring; "C" clip
149	See Note	POTENTIOMETER (R213)
150	-----	PART OF ITEM 149
151	-----	PART OF ITEM 149
152	3605153F01	KNOB
153	1305197F01	ESCUTCHEON
154	0300136049	SCREW, Phillips; 2-56 × ½"
155	0410059A58	WASHER, Spring
156	4210219A20	RING, Retaining
157	4210219A34	RING, Retaining
158	4210219A20	RING, Retaining
159	2200125842	PIN, Cotter
160	1405849R01	INSULATOR, Connector

NOTE: Refer to electrical parts list for part number and description.

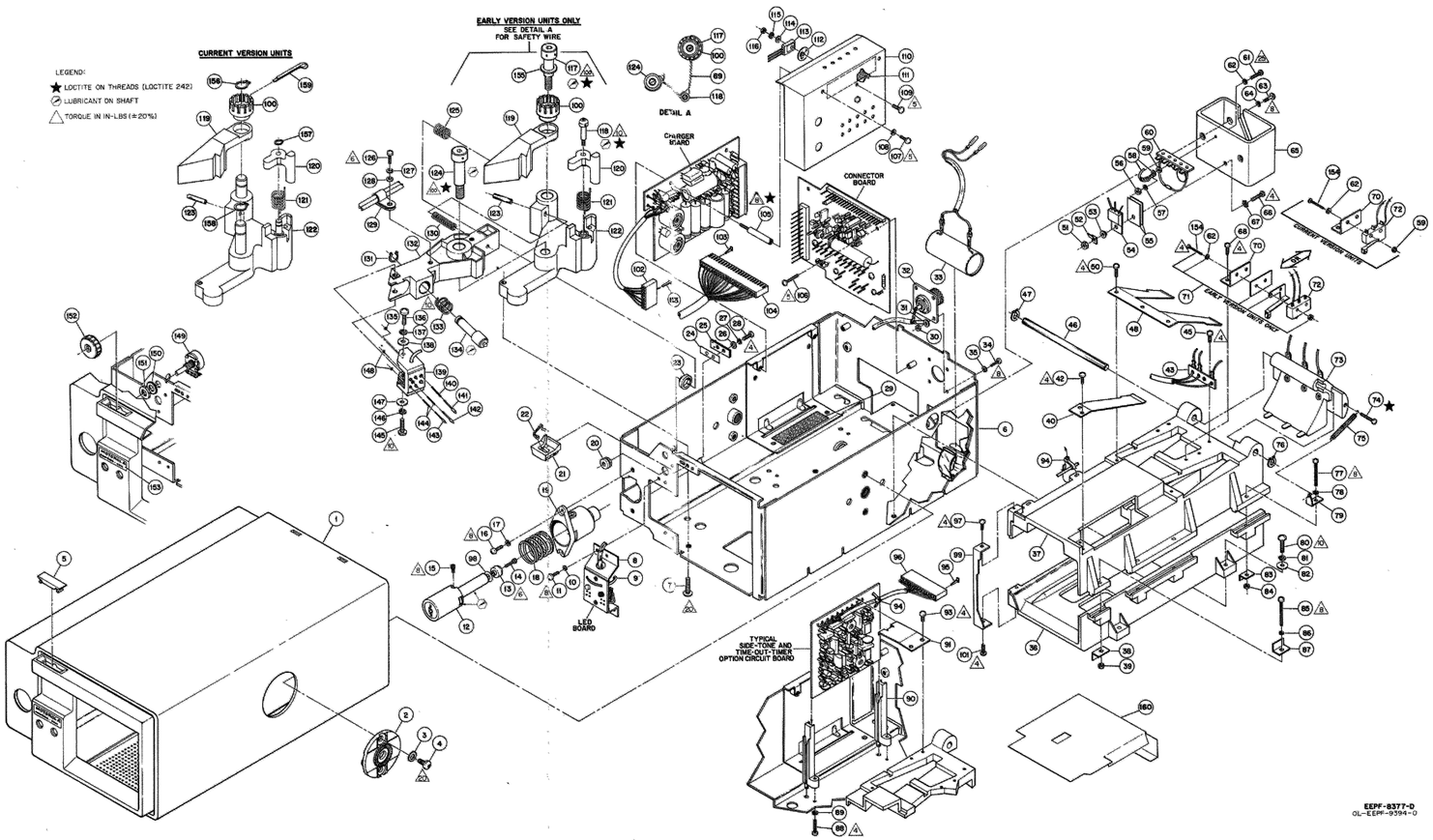

END OF DOCUMENT