MOBILE RADIO

MAINTENANCE MANUAL

VEHICULAR CHARGER MODELS 4EP63A12 & 4EP63A13 (OPTIONS 4352, 4364 & 4390 THRU 4398)

Maintenance Manual LBI-4358E

DF-
0069

4EP63A12,13

SPECIFICATIONS *

VEHICULAR CHARGER

Model 4EP63A13	12-Volt, Negative Ground					
Model 4EP63A12	12 to 72 Volts, ± Ground					
Used With	PR Model Two-Way Radios					
Input Voltage	12 V (Neg. Gnd)	12 V (±Gnd)	24 V (±Gnd)	36 V (±Gnd)	48 V (±Gnd)	72 V (±Gnd)
Current Drain						
High Charge	280 mA	530 mA	275 mA	275 mA	275 mA	275 mA
Trickle Charge	90 mA	430 mA	215 mA	215 mA	215 mA	215 mA
Charging Current						
High Charge	200 mA	200 mA	200 mA	200 mA	200 mA	200 mA
Trickle Charge	75 mA	75 mA	75 mA	75 mA	75 mA	75 mA
Maximum Charge Time						
100% Charge	14 hours					
70% Charge	6 hours					
Temperature Range	+5°C to 45°C (+41°F to 113°F)					

SPEAKER AMPLIFIER

Audio Power Output	10 Watts
Audio Input	500 Milliwatts
Distortion	Less than 10% at rated audio
Power Drain	
Standby	80 Milliamperes
Full Power	1.5 amperes maximum
Input Voltage	±12 V

*These specifications are intended primarily for the use of the serviceman. Refer to the appropriate Specification Sheet for the complete specifications.

GENERAL ELECTRIC

TABLE OF CONTENTS

OPTION NUMBER	DESCRIPTION
4352	10-Watt Speaker Model 4EZ18A13
4364	Handset Model 4EM26C10 and Hookswitch 19B204867G7
4390	12-Volt, Neg. Ground Charger and Antenna Model 4EY12A13
4391	12-Volt, ± Ground Charger and Antenna Model 4EY12A13
4392	24-Volt, ± Ground Charger and Antenna Model 4EY12A13
4393	36-Volt, ± Ground Charger and Antenna Model 4EY12A13
4394	48-Volt, ± Ground Charger and Antenna Model 4EY12A13
4395	72-Volt, ± Ground Charger and Antenna Model 4EY12A13
4396	12-Volt, Neg. Ground Charger, Microphone Model 4EM25E10, 10-Watt Speaker-Amplifier Model 4EZ18A13, and Antenna Model 4EY12A13
4397	12-Volt, Neg. Ground Charger, Microphone Model 4EM25E10, 1/2-Watt Speaker Model 4EZ16A22, and Antenna Model 4EY12A13
4398	Adaptor Cable 19A129195G1

WARNING

Under no circumstances should any person be permitted to handle any portion of equipment that is supplied with high voltage, or to connect any external apparatus to the units while the units are supplied with power. KEEP AWAY FROM LIVE CIRCUITS.

DESCRIPTION

General Electric Vehicular Charger Models 4EP63A12 and 4EP63A13 are used for mounting MASTR Personal PR Series two-way radios in a vehicle so that the radio can be used as a mobile unit while recharging the battery. The vehicular charger will recharge the nickel-cadmium battery in the radio in 14 hours or less.

The charger is equipped with a circuit that prevents the battery from overcharging. When the battery is charged to approximately 70% of capacity, the circuit switches to trickle charge for the remainder of the charging time (approximately 5 to 6 hours). When not being used, the radio can be left on trickle charge indefinitely without damage to the battery.

When necessary to leave the vehicle, the radio can be locked in the charger, or quickly removed from the charger and carried with the operator.

Placing the radio in the charger automatically turns the charger on, and connects the radio to the external antenna, microphone, Push-to-Talk, speaker and charging contacts. No additional external cable connections to the radio are required.

Removing the radio from the charger automatically turns the charger off.

INSTALLATION

CHARGER

Install the charger where it will be within convenient reach of the operator, and where it will not interfere with the safe operation of the vehicle. The charger is normally mounted on the underside of the instrument panel.

To mount the charger:

1. Use the mounting bracket as a template and drill the two pilot holes with a #29 (9/64-inch) drill.

2. Attach the bracket to the mounting surface with the #10 x 5/8-inch self-tapping screws and lockwashers provided.

3. Mount the charger in the mounting bracket with the four machine screws and lockwashers provided. Be sure to leave sufficient space behind the charger so that the four screws holding the chassis to the case can be removed.

4. Connect the Red fused lead to battery plus, and the Black fused lead to to battery negative. Leave sufficient slack so that the charger may be pulled out of its case for servicing with the power applied.

SPEAKER

Mount the speaker where it will direct sound to the operator but not interfere with his vision. In exposed locations or areas of high humidity, mount the speaker so that moisture will not accumulate in the speaker cone.

The universal mounting bracket enables the speaker to be mounted on the top or bottom of the instrument panel, on the firewall, above the windshield in trucks, or behind the speaker grille in some vehicles.

To mount the speaker:

1. Use the mounting bracket as a template and drill three mounting holes with a #29 (9/64-inch) drill.

2. Attach the bracket to the mounting surface with the #10 x 5/8-inch self-tapping screws supplied with the unit.

3. Attach the speaker to the mounting bracket and connect the speaker plug cable to the speaker jack on the back of the charger.

MICROPHONE

Mount the microphone where it will be within easy reach of the operator but will not interfere with the safe operation of the vehicle.

To mount the microphone:

1. Use the microphone bracket as a template and drill two mounting holes with a #32 (1/8-inch) drill.

2. Attach the bracket to the mounting surface with the two #8 x 1/2" screws provided.

3. Connect the microphone plug to the jack on the front of the charger.

HANDSET & HOOKSWITCH OPTION

Mount the hookswitch where the handset will be within easy reach of the operator but will not interfere with the safe operation of the vehicle. To mount the hookswitch:

1. Use the hookswitch as a template and drill the two mounting holes with a #32 (1/8-inch) drill.

2. Mount the hookswitch with the two #8 x 1-1/4-inch screws provided.

3. Connect the hookswitch leads to TB2 in the speaker as shown in the Hookswitch Installation Instructions listed in the Table of Contents.

4. Connect the handset plug to the microphone jack on the front of the charger.

ANTENNA

Installation instructions for the antenna are packaged with the antenna. The antenna must be installed in accordance with good engineering practice for optimum results.

For the 4EY12A13 antenna, the most effective mounting position is usually in the center of the roof of the vehicle. The antenna cable will normally run from antenna jack J502 on the back of the charger, behind sections of the interior trim to a door or window post, and then up between the roof and header in the passenger compartment to the antenna base.

ADAPTOR CABLE OPTION

Adaptor cable option 4398 is available to permit the charger to be used with earlier PR model radios. The plug connects to the accessory jack on the top of the radio to provide receiver audio, PTT and microphone connections. Installation instructions for the adaptor cable are listed in the Table of Contents.

OPERATION

To use the vehicular charger, place the radio into the charging insert with the speaker facing down (see Figure 1). Then press in the radio against the bottom of the charging insert until the latch catches, holding the radio in the charger. This automatically turns the charger on.

The radio can be used to send and receive messages while charging - although it will probably take longer to recharge the battery. An external microphone and Personal Series radio equipped for Remote Push-to-Talk are required for this application.

To remove the radio from the charger, simply press the release button on the front of the charger and slide the radio out of the insert. When it is necessary to leave the radio in the charger, use the key supplied with the charger and turn the lock all the way to the right. This blocks the release button, locking the radio in the charger.

When using the 10-Watt speaker, set the speaker output for a comfortable listening level with the VOLUME control on the radio.

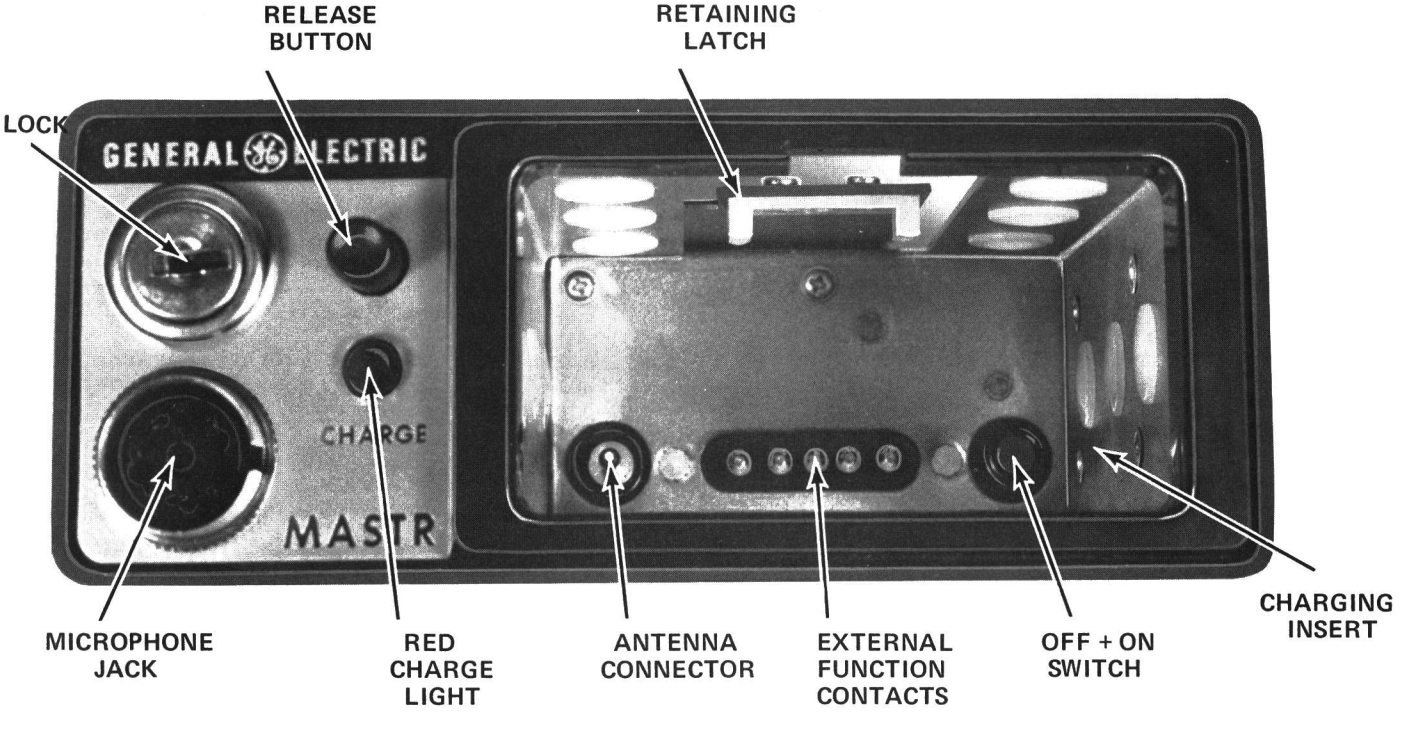

Figure 1 - Layout Diagram

NOTE

Due to the temperature characteristics of nickel-cadmium batteries, the batteries will not accept a full charge at temperature extremes.

CIRCUIT ANALYSIS

VEHICULAR CHARGERS

Both of the vehicular chargers are equipped with a red CHARGE light, charging circuit, lock and fused power leads. The 4EP63A12 is also equipped with a DC-to-DC coverter to permit operation in positive and negative ground vehicle systems. Modifications required for positive or negative ground, 12-Volt through 72-Volt operation are listed in the Maintenance section of this manual (see Table of Contents).

References to symbol numbers mentioned in the following text can be found on the Schematic Diagram, Outline Diagram and Parts List (see Table of Contents).

DC-to-DC Converter

Transistors Q1 and Q2 and transformer T1 on charger board A501 operate as a conventional, inductively-coupled DC-to-DC converter. Placing a radio in the charger turns on S501. This applies the supply voltage to the collectors of Q1 and Q2 through the primary windings of T1.

Q1 and Q2 act as switches, with one conducting while the other is off. Due to the inherent differences in the transistors, one will start conducting before the other when power is applied to their emitters.

Assume that Q1 starts to conduct first, causing current to flow through one half of the primary winding of T1. The induced voltage in the feedback winding of T1 is coupled to the base of Q1, further increasing collector current. Regenerative action continues until the primary of T1 is saturated. When saturation is reached, no voltage is induced in the feedback winding. The magnetic field starts to collapse, sending a current through the transformer in the opposite direction. This reverses the polarity of the induced voltage in the feedback winding which cuts off Q1 and provides a forward bias for Q2 causing it to conduct. The two transistors continue to conduct alternately at a frequency of approximately 4000 hertz.

The AC voltage developed across the secondary windings of T1 is rectified by CR3 through CR6 and applied to the charging circuit.

Charging Circuit

Placing a radio into the charger causes Q3 to conduct, applying a 200 milliampere charging current to the battery. The charging current is limited by CHARGE light DS501.

When Q3 is conducting, Q4 and Q5 are turned off. Whenever the battery charges up to 70% of capacity, the voltage developed across the voltage reference circuitry (VR1, CR7, CR8, R8, R4, and R7) causes Q4 to start conducting. This causes Q3 to begin to turn off. As Q3 starts turning off, its collector voltage begins to rise. When the voltage rises to over 11 Volts (8.5 Volts in the 4EP63A13), Zener diode VR3/VR4 conducts and turns on Q4. Turning on Q4 turns off Q3 and CHARGE light DS501. The switching action is assisted by this positive feedback through VR3/VR4.

When Q3 is turned off, the circuit is "latched" in the trickle-charge mode. The trickle-charge current is limited by current limiting resistor R13/R22. The charger will remain on trickle-charge until the radio is removed from the charger, or power has been removed from the charger.

The setting of potentiometer R4 determines the voltage level that causes the charger to switch to the trickle-charge mode. Complete instructions for setting R4 are contained in the Adjustment section as listed in the Table of Contents.

Removing the radio from the charger causes the voltage at the positive charging terminal to rise to approximately 14 Volts. The voltage at the junction of R8 and R10 rises to approximately 5 Volts, which turns on Q5. Turning on Q5 turns off Q4 and keeps C3 discharged, resetting the charging circuit. Load resistor R14 and Zener diode VR2 keep the converter input voltage from rising in 36- to 72-Volt systems when no radio is in the charger.

Placing a radio into the charger instantly turns off Q5. Capacitor C3 keeps Q4 turned off so that Q3 starts conducting, restarting the charging cycle.

Keying the microphone turns off Q4 and discharges C3 through diode CR12. Turning off Q4 causes Q3 to switch to the high charge rate. When the microphone button is released, C4 is discharged, keeping Q4 turned off and Q3 turned on. This holds the circuit in the high charge rate until the battery is recharged.

Audio Amplifier

Receiver audio at contact E503 is coupled through C5 to the base of impedance-matching transistor Q6. The output of Q6

is applied to a complementary amplifier (Q7 and Q8), and then applied to the external speaker.

In charger Model 4EP63A13, coil L1 is provided to reduce alternator noise.

SPEAKER-AMPLIFIER

Speaker-Amplifier Model 4EZ18A13 is designed for operation in 12-Volt systems only.

Audio from the receiver is coupled through transformer T1 to the base of the Class B, push-pull amplifier transistors Q1 and Q2. Base bias is provided by resistors R4, R5, R8, R9 and RT1. Thermistor RT1 and resistor R4 form a parallel compensating network which stabilizes the emitter current of Q1 and Q2 under varying temperature conditions.

The output taken from the emitters of Q1 and Q2 is coupled through impedance matching auto-transformer T2 to speaker LS2.

ADJUSTMENT

PREFERRED METHOD

Potentiometer R4 is adjusted at the factory. However, if either CR7, CR8, VR1 or Q4 is replaced, it becomes necessary to adjust R4.

Calibrator Model 4EX10A10 is designed for use with the vehicular charger for properly setting R4. When using the calibrator, set R4 as follows:

1. Remove the charger from its housing, as directed in the Disassenbly Procedure.
2. Connect a clip lead from the red jack on the calibrator to the positive charger terminal (E501). The connect a clip lead from the black jack on the calibrator to the negative charger terminal (E502).
3. Place the calibrator switch in Position B.
4. Rotate R4 until the CHARGE light turns on. Then carefully adjust R4 until the CHARGE light just turns off.

ALTERNATE METHOD

This alternate method of adjusting R4 may be used if Calibrator Model 4EX10A10 is not available. This procedure requires a DC-VTVM that is accurate to .02 Volts, and a fully charged battery pack.

CAUTION

Failure to adjust potentiometer R4 to within .02-Volt may result in an insufficient charge or damage to the battery.

Set R4 as follows:

1. Connect the positive meter lead to the positive charging terminal (E501) and the negative meter lead to the negative charging terminal (E502).
2. Place the battery into the charger. If necessary, rotate R4 until the CHARGE light turns on. Then turn R4 until the light just turns off.
3. Remove and then replace the battery pack in the charger. Note the meter reading when the CHARGE light turns off. If reading is not 8.35 Volts, adjust R4 slightly.
4. Repeat Step 3 until the CHARGE light turns off when the meter reads 8.35 Volts.

MAINTENANCE

CHARGER

To gain access to the charger circuitry for servicing, remove the four Phillips-head screws in the rear of the housing and slide the charger out of the housing.

To remove A501/A502 for servicing, remove the flat-head screws in eahc corner of the board (located on the side of the chassis).

To replace the CHARGE light: remove the chassis from the case and charge the bayonet-type bulb.

SPEAKER-AMPLIFIER

To gain access to the speaker-amplifier circuitry, remove the two screws on each side of the speaker case. Then lift off the front section of the speaker housing.

TROUBLESHOOTING

Should a difficult service problem arise, the Troubleshooting Procedure for the Charger listed in the Table of Contents is provided to assist the serviceman. The procedure includes DC voltage readings of the transistor stages in the charge, trickle-charge and reset mode, and voltage readings for the converter circuit.

CHARGER VOLTAGE CHANGES

The following circuit changes must be performed when changing the 4EP63A12, for 12-, 24-, 48-, and 72-Volt, positive or negative ground operation. Refer to the Outline and Schematic Diagrams for the location of components changed.

12-Volt Operation

1. Connect a jumper from H9 to H11, and from H14 to H16 on charger board A501.
2. If present, remove dropping resistor R1, R2, R3, or R4 (located under the shield on the back of the charger housing) and connect a jumper from TB1-1 to TB1-6.

24-Volt Operation

1. Connect a jumper from H9 to H10, and from H15 to H16 on charger board A501.
2. If present, remove the jumpers connected from TB1-1 to TB1-6.
3. Mount dropping resistor R4 (20 ohms 7W) as shown on the Outline Diagram. Connect one lead to TB1-1 and the other lead to TB1-6.
4. Mount protective shield 19B216774P1 over R4. Sleeve the leads before connecting.
5. Change fuses in power cable to lamp.

36-Volt Operation

1. Connect a jumper from H9 to H10, and from H15 and H16 on charger board A501.
2. If present, remove the jumper connected from TB1-1 to TB1-6.
3. Mount dropping resistor R3 (62 ohms, 20 Watts) as shown on the Outline Diagram. Connect one lead to TB1-1 and the other lead to TB1-6. Sleeve the leads before connecting.
4. Mount the protective shield (19B216774P1) over R3.
5. Change fuses in power cable to 1 amp.

48-Volt Operation

1. Connect a jumper from H9 to H10, and from H15 to H16 on charger board A501.
2. If present, remove the jumper connected from TB1-1 to TB1-6.
3. Mount dropping resistor R1 (125 ohms 20 Watts) as shown on the Outline Diagram. Connect one lead to TB1-1 and the other to BT1-6. Sleeve the leads before connecting.
4. Mount the protective shield (19B216774P1) over R1.
5. Change fuses in power cable to 1 amp.

72-Volt Operation

1. Connect a jumper from H9 to H10, and from H15 to H16 on charger board A501.
2. If present, remove the jumper connected from TB1-1 to TB1-6.
3. Mount dropping resistor R2 (250 ohms 20 Watts) as shown on the Outline Diagram. Connect one lead to TB1-1 and the other to TB1-6. Sleeve the leads before connecting.
4. Mount the protective shield (19B216774P1) over R2.
5. Change fuses in power cable to 1 amp.

SPEAKER VOLTAGE CONNECTIONS

The Speaker Amplifier jumper connections should be connected as shown on the Schematic Diagram for 12 Volt negative ground operation.

OUTLINE DIAGRAM

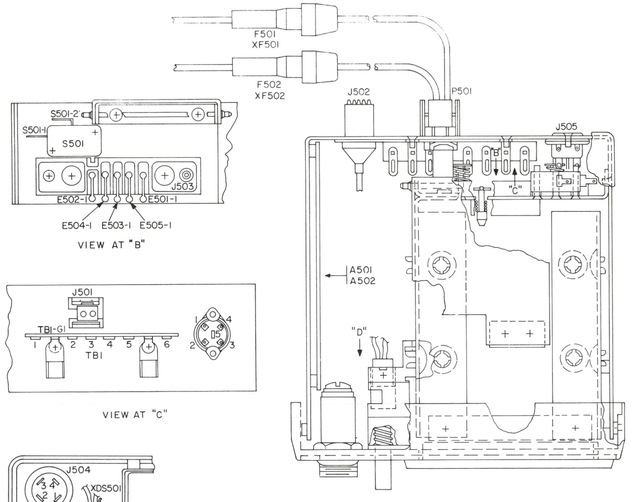

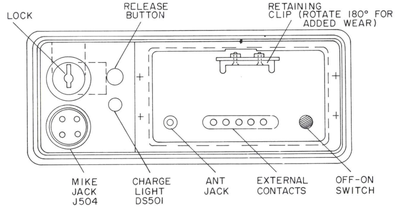

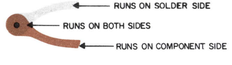

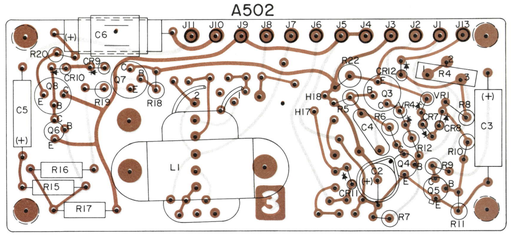

LEAD IDENTIFICATION FOR Q3 & Q4

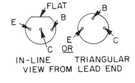

LEAD IDENTIFICATION FOR Q5

NOTE: LEAD ARRANGEMENT, AND NOT CASE SHAPE, IS DETERMINING FACTOR FOR LEAD IDENTIFICATION.

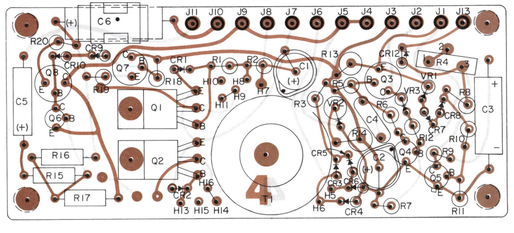

(19D416794, Rev. 3)
(19C320028, Sh. 1, Rev. 4)
(19C320028, Sh. 2, Rev. 4)

SCHEMATIC DIAGRAM

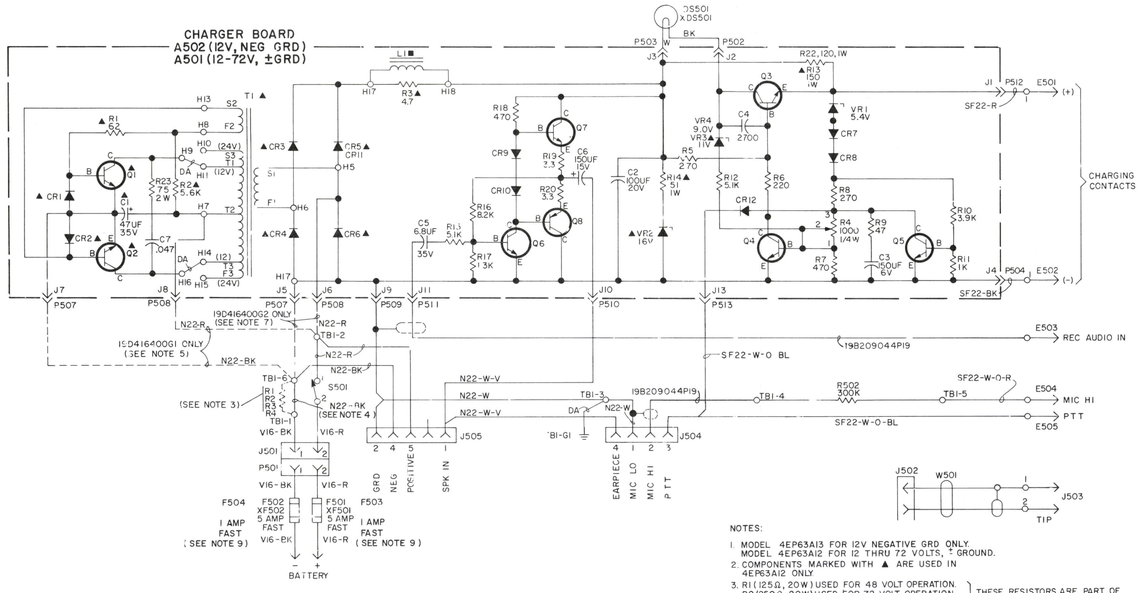

NOTES:

1. MODEL 4EP63A13 FOR 12V NEGATIVE GRD ONLY. MODEL 4EP63A12 FOR 12 THRU 72 VOLTS, ± GROUND.
2. COMPONENTS MARKED WITH ▲ ARE USED IN 4EP63A12 ONLY.
3. R1 (125Ω, 20W) USED FOR 48 VOLT OPERATION. R2 (250Ω, 20W) USED FOR 72 VOLT OPERATION. R3 (62Ω, 20W) USED FOR 36 VOLT OPERATION. R4 (20Ω, 7W) USED FOR 24 VOLT OPERATION. } THESE RESISTORS ARE PART OF MOD. KIT 19A129192G1, G2, G3 & G4 OPTIONS 4392, 4393, 4394 & 4395
4. N22-BK WIRE CONNECTED FROM TB1-1 TO TB1-6 FOR 12 VOLT OPERATION.
5. FOR 4EP63A12, CONNECT N22-BK WIRE FROM TB1-6 TO J7, AND N22-R WIRE FROM TB1-2 TO J8 AS SHOWN BY DASHED LINES.
6. DA = #22 AWG WIRE SIZE.
7. FOR 4EP63A13, CONNECT N22-BK WIRE FROM TB1-6 TO J5, AND N22-R WIRE FROM TB1-2 TO J6, AS SHOWN BY DASHED LINES.
8. COMPONENT MARKED WITH ■ IS USED ON 4EP63A13 ONLY.
9. F503 AND F504 ARE USED FOR 24-72V OPTIONS AND ARE CONTAINED IN KITS 19A129192G1 - G4.

SEE APPLICABLE PRODUCTION CHANGE SHEETS IN INSTRUCTION BOOK SECTION DEALING WITH THIS UNIT, FOR DESCRIPTION OF CHANGES UNDER EACH REVISION LETTER.

THIS ELEM DIAG APPLIES TO

MODEL NO	REV LETTER
4EP63A12	D
4EP63A13	C
19A129192G1	A
19A129192G2	A
19A129192G3	A
19A129192G4	A

ALL RESISTORS ARE 1/2 WATT UNLESS OTHERWISE SPECIFIED AND RESISTOR VALUES IN OHMS UNLESS FOLLOWED BY K=1000 OHMS OR MEG=1,000,000 OHMS. CAPACITOR VALUES IN PICOFARADS (EQUAL TO MICROMICROFARADS) UNLESS FOLLOWED BY UF=MICROFARADS. INDUCTANCE VALUES IN MICROHENRYS UNLESS FOLLOWED BY MH=MILLIHENRYS OR H=HENRYS.

IN ORDER TO RETAIN RATED EQUIPMENT PERFORMANCE, REPLACEMENT OF ANY SERVICE PART SHOULD BE MADE ONLY WITH A COMPONENT HAVING THE SPECIFICATIONS SHOWN ON THE PARTS LIST FOR THAT PART.

(19D416392, Rev. 15)

SCHEMATIC & OUTLINE DIAGRAM

VEHICULAR CHARGER MODELS 4EP63A12 & 13

Issue 5

PARTS LIST

LBI-4359E

VEHICULAR CHARGER
MODEL 4EP63A12 (19D416400G1)
MODEL 4EP63A13 (19D416400G2)

SYMBOL	GE PART NO.	DESCRIPTION
A501 and A502		CHARGER BOARD A501 19C320030G1 12-72 V ± GRD A502 19C320030G2 12 V REG GRD
		- - - - - - - - - - CAPACITORS - - - - - - - - -
C1	5496267P20	Tantalum: 47 µf ±20%, 35 VDCW; sim to Sprague Type 150D.
C2	5496267P16	Tantalum: 100 µf ±20%, 20 VDCW; sim to Sprague Type 150D.
C3	5496267P3	Tantalum: 150 µf ±20%, 6 VDCW; sim to Sprague Type 150D.
C4	5494481P127	Ceramic disc: 2700 pf ±20%, 1000 VDCW; sim to RMC Type JF Discap.
C5	5496267P18	Tantalum: 6.8 µf ±20%, 35 VDCW; sim to Sprague Type 150D.
C6	5496267P12	Tantalum: 150 µf ±20%, 15 VDCW; sim to Sprague Type 150D.
C7*	19A116080P105	Polyester: 0.047 µf ±10%, 50 VDCW. Added by REV B.
		- - - - - - - DIODES AND RECTIFIERS - - - - - -
CR1 and CR2	19A115250P1	Silicon.
CR3* thru CR6*	4037822P1	Silicon.
		In REV C and earlier:
	5494922P3	Silicon; sim to Hughes 1N458.
CR7 thru CR10	19A115250P1	Silicon.
CR11	4037822P1	Silicon.
CR12	19A115250P1	Silicon.
		- - - - - - - - JACKS AND RECEPTACLES - - - - - -
J1 thru J12	4033513P4	Contact, electrical: sim to Bead Chain L93-3.
		- - - - - - - - - - - INDUCTORS - - - - - - - - -
L1*	19A115743P1	Reactor: 10.1 mh at .500 amp DC, 1.2 ohms DC res max, 24 VDC operating. Added to 4EP63A13 by REV A.
		- - - - - - - - - TRANSISTORS - - - - - - - - -
Q1 and Q2	19A116118P2	Silicon, NPN.
Q3	19A115300P2	Silicon, NPN; sim to Type 2N3053.
Q4*	19A116774P1	Silicon, NPN; sim to Type 2N5210.
		In REV B and earlier:
	19A115362P1	Silicon, NPN; sim to Type 2N2925.
Q5*	19A116755P1	Silicon, NPN; sim to Type 2N3947.
		In REV B and earlier:
	19A115123P1	Silicon, NPN.
Q6	19A115552P1	Silicon, NPN; sim to Type 2N2714.
Q7	19A115300P4	Silicon, NPN.
Q8	19A115562P2	Silicon, PNP.
		- - - - - - - - - - RESISTORS - - - - - - - - -
R1*	3R77P620J	Composition: 62 ohms ±5%, 1/2 w.
		Earlier than REV A:
	3R77P101K	Composition: 100 ohms ±10%, 1/2 w.
R2	3R77P562K	Composition: 5600 ohms ±10%, 1/2 w.
R3	7147161P12	Composition: 4.7 ohms ±10%, 1/2 w.
R4	19B209358P103	Variable, carbon film: approx 25 to 1000 ohms ±10%, 0.2 w; sim to CTS Type X-201.
R5*	3R77P271K	Composition: 270 ohms ±10%, 1/2 w.
		In REV B and earlier:
	3R77P561K	Composition: 560 ohms ±10%, 1/2 w.
R6	3R77P221K	Composition: 220 ohms ±10%, 1/2 w.
R7	3R77P471J	Composition: 470 ohms ±5%, 1/2 w.
R8	3R77P511J	Composition: 510 ohms ±5%, 1/2 w.
R9	3R77P470K	Composition: 47 ohms ±10%, 1/2 w.
R10	3R77P392K	Composition: 3900 ohms ±10%, 1/2 w.
R11	3R77P102K	Composition: 1000 ohms ±10%, 1/2 w.
R12	3R77P512J	Composition: 5100 ohms ±5%, 1/2 w.
R13	3R78P151J	Composition: 150 ohms ±5%, 1 w.
R14	3R78P510J	Composition: 51 ohms ±5%, 1 w.
R15	3R77P512J	Composition: 5100 ohms ±5%, 1/2 w.
R16	3R77P822J	Composition: 8200 ohms ±5%, 1/2 w.
R17	3R77P132J	Composition: 1300 ohms ±5%, 1/2 w.
R18	3R77P471J	Composition: 470 ohms ±5%, 1/2 w.
R19 and R20	7147161P15	Composition: 3.3 ohms ±5%, 1/2 w.
R21*	7147161P17	Composition: 1.5 ohms ±5%, 1/2 w. Deleted by REV A.
R22	3R78P121J	Composition: 120 ohms ±5%, 1 w.
R23*	3R79P750J	Composition: 75 ohms ±5%, 2 w. Added by REV B.
		- - - - - - - - - TRANSFORMERS - - - - - - - -
T1	19C317251G1	Coil.
		- - - - - - - - VOLTAGE REGULATORS - - - - - - -
VR1	4036887P5	Silicon, Zener.
VR2	19A115528P6	Silicon, Zener.
VR3	4036887P8	Silicon, Zener.
VR4*	4036887P7	Silicon, Zener.
		In REV B and earlier:
	4036887P9	Silicon, Zener.
		- - - - - - - INDICATING DEVICES - - - - - - -
DS501	19C307037P29	Lamp, incandescent: 6.3 v; sim to GE 44.
		- - - - - - - - - - TERMINALS - - - - - - - - -
E501 thru E505		Includes:
	19A129190P1	Contact.
	4033714P17	Terminal.
		- - - - - - - - - - - FUSES - - - - - - - - - -
F501 and F502	1R16P8	Quick blowing: 5 amps at 250 v; sim to Littelfuse 312005 or Bussmann MTH-5.
		- - - - - - - JACKS AND RECEPTACLES - - - - - -
J501		(See RC-2291, items 52 and 53).
J502		(Part of W501).
J503		(See mechanical parts RC-2291, items 59-63).
J504		(See mechanical parts RC-2291, items 54-56).
J505	5493018P1	Connector: 5-contacts, molded black phenolic, steel mounting saddle; sim to Cinch Mfg Co 203-41-05-D81.
		- - - - - - - - - - PLUGS - - - - - - - - -
P501		(See RC-2291, items 57 and 58).
P502 thru P504	4029840P1	Contact, electrical: sim to AMP 41854.
P507 thru P513	4029840P2	Contact, electrical: sim to Amp 42827-2.
		- - - - - - - - - - RESISTORS - - - - - - - - -
R501*	3R77P911J	Composition: 910 ohms ±5%, 1/2 w. Deleted by REV B.
R502*	3R77P304J	Composition: 0.30 megohm ±5%, 1/2 w.
		In REV A and earlier:
	3R77P473K	Composition: 47,000 ohms ±10%, 1/2 w.
		- - - - - - - - - - SWITCHES - - - - - - - - - -
S501	19A116681P1	Switch, sensitive: Single pole, normally open, 5 amp at 125/250 VAC, 60 Hz, 0.500 amp at 12 VDC; sim to Cherry Electrical Products E23-23B.
		- - - - - - - - TERMINAL BOARDS - - - - - - - -
TB1	7775500P24	Phen: 8 terminals.
		- - - - - - - - - - CABLES - - - - - - - - -
W501	19A127521G2	RF: approx 6 inches long. (Includes J502).
		- - - - - - - - - - SOCKETS - - - - - - - - -
XDS501	4032220P1	Lampholder, miniature: sim to Drake N517.
XF501	19A122111G1	Fuse lead.
XF502	19A122111G4	Fuse lead.
		HARNESS ASSEMBLY 19D416400G5 (Includes J501, J504, J505, P504, P507-P513, R502, TB1)
		FUSE ASSEMBLY 19D416400G3 (Includes P501, XF501, XF502)
		LAMPHOLDER ASSEMBLY 19D416400G4 (Includes P502, P503, XDS501)
		MODIFICATION KIT 19A129192G1 48 V ± GRD 19A129192G2 72 V ± GRD 19A129192G3 36 V ± GRD 19A129192G4 24 V ± GRD
		- - - - - - - - - - - FUSES - - - - - - - - - -
F503* and F504*	1R16P3	Quick blowing, cartridge: 1 amp 250 v; sim to Littelfuse 312001 or Bussmann AGC-1. Added by REV A.
		- - - - - - - - - - RESISTORS - - - - - - - - -
R1	5493035P36	Wirewound: 125 ohms ±10%, 20 w; sim to Hamilton Hall Type HR.
R2	5493035P37	Wirewound: 250 ohms ±10%, 20 w; sim to Hamilton Hall Type HR.
R3	5493035P47	Wirewound: 62 ohms ±10%, 20 w; sim to Hamilton Hall Type HR.
R4	5493035P20	Wirewound: 20 ohms ±5%, 7 w; sim to Hamilton Hall Type HR.
		- - - - - - - - - - MISCELLANEOUS - - - - - - -
	19B216774P1	Shield.
	N80P9005C13	Screw: No. 4-40 x 5/16.
	N210P9C13	Steel nut: No. 4-40.
	N404P11C13	Lockwasher: No. 4-40.
		132-470 MHz ANTENNA MODEL 4ET12A13
		- - - - - - - - - - MISCELLANEOUS - - - - - - -
	19A121902G1	Mounting bracket includes two 19A115495P2 machine screws (1/4-20 x 5/16).
	19A115495P2	Machine screw: No. 1/4-20 x 5/16. (Secures mounting bracket to charger case).
		MECHANICAL PARTS (SEE RC-2291)
1	19C320038P1	Lever.
2	4033198P14	Eyelet, metal: sim to Stimpson A1386.
3	4037460P127	Stud, self cinching: No. 6-32 x 7/8; sim to Penn FH-632-14C.
4	7141225P3	Nut, steel: No. 6-32.
5	4037460P1	Stud, self cinching: No. 4-40 x 1/4; sim to Penn FH-440-4CL.
6	N404P13C6	Lockwasher, internal tooth: No. 6.
7	4035235P6	Spring, helical: sim to Lee LC-032E-7.
8	19A127498P1	Spring, helical: sim to Lee LC-016B-438.
9	19A129190P1	Contact.
10	19A121891G2	Cover.
11	7150186P2	Spacer: No. 4 x 1/16.
12	4035656P14	Spacer, threaded: No. 4-40 x 3/16.
13	19B219424P1	Support.
14	4037072P13	Button plug, nylon; sim to Fastex 207-230201-00.
15	4035656P40	Spacer, threaded: No. 6-32 x 3/16.
16	19C320039P1	Casting.
17	K136P504C	Screw, phillipshead: No. 2-32 x 1/4.
18	N402P3C13	Washer, steel: No. 2.
19	19C317255P2	Sleeve.
20	19B219423P1	Clip, molded nylon.
21	19D416401P1	Support.
22	19C317271P2	Plunger.
23	19A127633P1	Spring: sim to Lee 111-1969.
24	19B216726P1	Button, Lexan®.
25	19B219426P1	Support.
26	7483709P8	Cinch nut: No. 6-32; sim to Penn CL-632-2.
27	19B209209P705	Tap screw, Phillips Pozidriv: No. 6-32 x 5/16.
28	5491682P18	Rim lock: sim to Yale and Towne P67022 90° cw rotation with (2) 5491682P17 Keys (LL47).
29	5491682P9	Cam, lock: sim to Yale and Towne 02-Y.
30	19B200525P127	Rivet, tubular, steel.
31	4032248P1	Clip, spring tension: steel; sim to Augat Brothers 6183-1A.
32	4036555P1	Insulator, washer: nylon. (Used with Q3, Q7 and Q8 on A501 and A502).
33	4037460P3	Stud, self cinching: No. 4-40 x 3/8; sim to Penn FH-440-6CL.
34	7141225P2	Nut, steel: No. 4-40.
35	N404P11C6	Lockwasher, internal tooth: No. 4.
36	N402P35C6	Washer, steel: No. 4.
37	19D416363P1	Support.
38	7118719P12	Clip, spring tension: sim to Prestole E-50019-041. (Used with C5 on A501 and A502).
39	19B200525P153	Rivet, tubular. (Used with C5 on A501 and A502).
40	19A116689P1	Spring, helical: sim to Lee LE-026B-00.
41	19C307038P6	Nut, push on: sim to Tinnerman C1522638-010.
42	19B204949P1	Jewel: red plastic.
43	4937460P132	Stud, self cinching: No. 4-40 x 3/4; sim to Penn FH-440-12C.
44	7141225P2	Nut, steel: No. 4-40.
45	N402P5C13	Washer, steel: No. 4.
46	7483709P7	Nut, cinch: No. 4-40; sim to Penn CL-440-2.
47	19A127776P1	Support.
48	19C307038P3	Nut, push on: sim to Tinnerman C14100-014-2.
49	19A129191P1	Hinge.
50	NP270638	Nameplate, etched aluminum.
51	7483709P7	Nut, cinch: No. 4-40; sim to Penn CL-440-2.
52	19A115884P7	Contact, electrical: No. 14-18 wire size; sim to AMP 60328-1. (Part of J501).
53	19A115884P5	Shell: sim to AMP 1-480359-0. (Part of J501).
54	19A116061P2	Shell: sim to Amphenol 91-PM4F-1000. (Part of J504).
55	19A116061P4	Lockwasher, internal tooth. (Part of J504).
56	19A122600P1	Nut, knurled: No. 13/16-27. (Part of J504).
57	19A115884P8	Contact, electrical: No. 14-18 wire size; sim to AMP 60327-1. (Part of P501).
58	19A115884P6	Shell, nylon: sim to AMP 1-480360-0. (Part of P501).
59	19B219425P1	Contact. (Part of J503).
60	19A127502P1	Insulator, teflon. (Part of J503).
61	19B219422P1	Collar. (Part of J503).
62	403614 3P2	Retainer ring: sim to Truarc 5133-18. (Part of J503).
63	19C307038P13	Nut, push on: sim to Tinnerman C13001-55-008-27. (Part of J503).
64	4033714P17	Solderless terminal: sim to Zierick 691.
65	4037460P127	Stud, self cinching: No. 6-32 x 7/8; sim to Penn FH-632-14C.
66	19D416362P1	Housing, contact.

PRODUCTION CHANGES

Changes in the equipment to improve performance or to simplify circuits are identified by a "Revision Letter", which is stamped after the model number of the unit. The revision stamped on the unit includes all previous revisions. Refer to the Parts List for descriptions of parts affected by these revisions.

REV. A (4EP63A13 only)

To eliminate alternator whine. Deleted R23, and added L1. Also added connection from TB1-3 to TB1-G1 (Ground).

REV. A - 4EP63A12

To improve charge current under all load conditions. Changed R1.

REV. B - To prevent transistor failure and reduce converter whine. Deleted R501 and Changed R502. Added C7 and R23 to Charger Board A501.

REV. C - To improve operation. Changed Q4, Q5, VR4 and R5.

REV. A - Mod Kit 19A129192G1-4
To protect charger in 24-74 volt operation. Added F503 and F504.

REV. D - 4EP63A12

To improve operation. Changed CR3 through CR6.

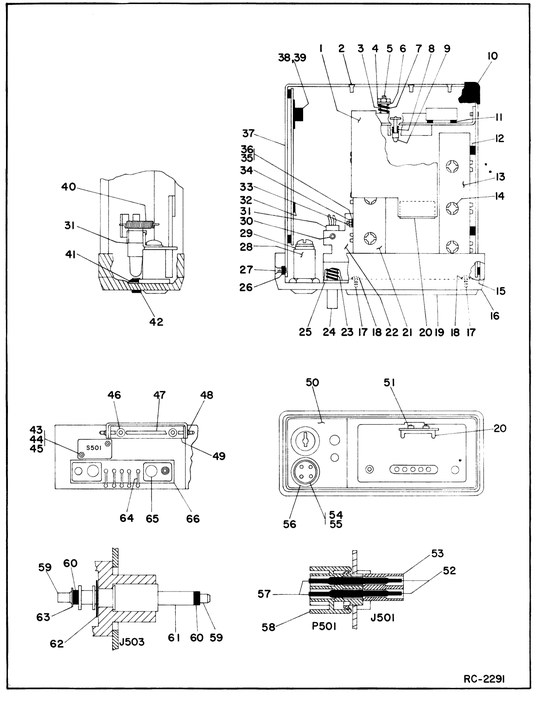

*COMPONENTS ADDED, DELETED OR CHANGED BY PRODUCTION CHANGES

SCHEMATIC DIAGRAM

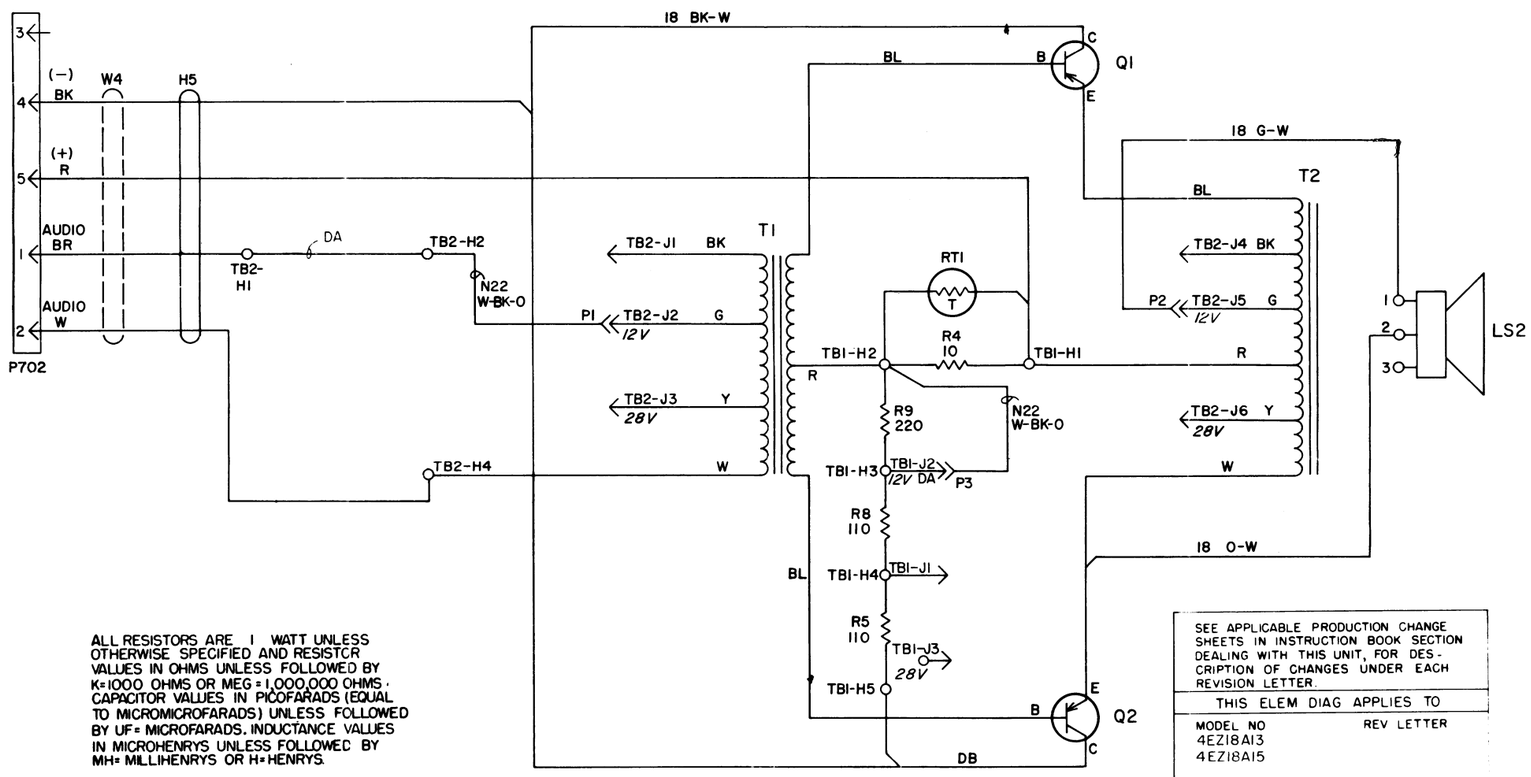

ALL RESISTORS ARE 1 WATT UNLESS OTHERWISE SPECIFIED AND RESISTOR VALUES IN OHMS UNLESS FOLLOWED BY K=1000 OHMS OR MEG=1,000,000 OHMS. CAPACITOR VALUES IN PICOFARADS (EQUAL TO MICROMICROFARADS) UNLESS FOLLOWED BY UF= MICROFARADS. INDUCTANCE VALUES IN MICROHENRYS UNLESS FOLLOWED BY MH= MILLIHENRYS OR H=HENRYS.

IN ORDER TO RETAIN RATED EQUIPMENT PERFORMANCE, REPLACEMENT OF ANY SERVICE PART SHOULD BE MADE ONLY WITH A COMPONENT HAVING THE SPECIFICATIONS SHOWN ON THE PARTS LIST FOR THAT PART.

SEE APPLICABLE PRODUCTION CHANGE SHEETS IN INSTRUCTION BOOK SECTION DEALING WITH THIS UNIT, FOR DESCRIPTION OF CHANGES UNDER EACH REVISION LETTER.

THIS ELEM DIAG APPLIES TO

MODEL NO	REV LETTER
4EZ18A13	
4EZ18A15	

(19C317673, Rev. 1)

OUTLINE DIAGRAM

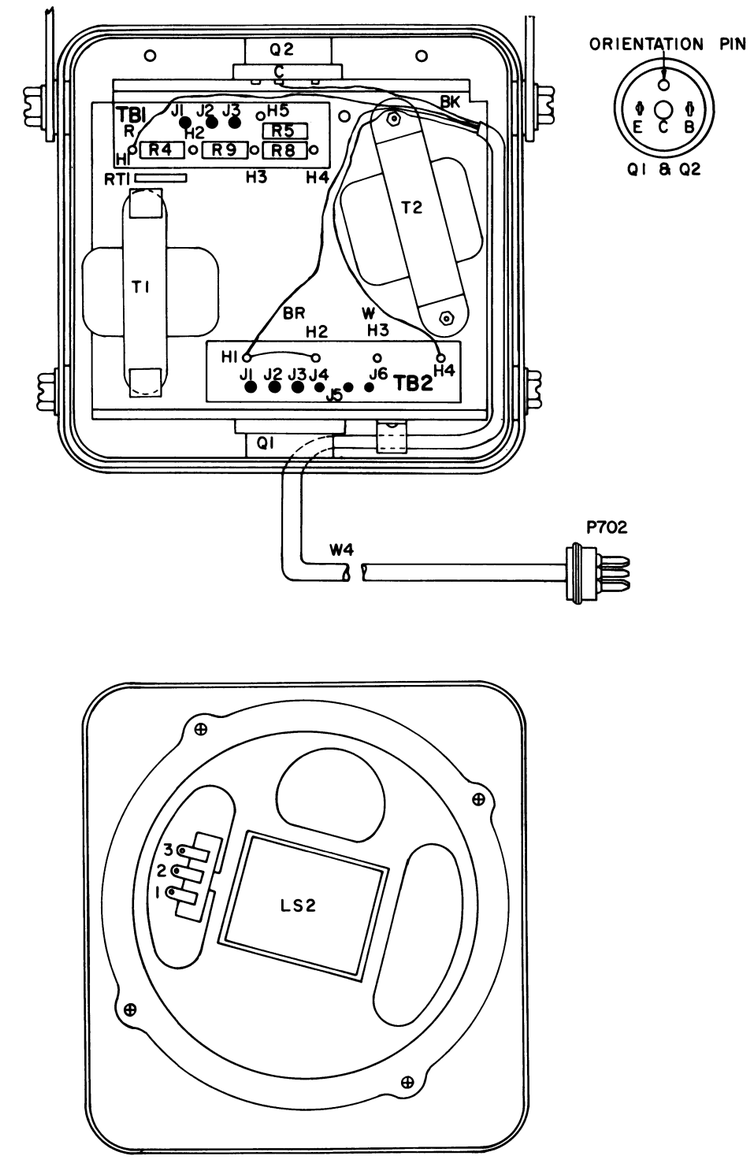

(19C317906, Rev. 2)

RESISTANCE READINGS

READINGS TAKEN FROM TRANSISTOR PIN TO RED LEAD OF SPEAKER CABLE (POSITIVE).

TRANSISTORS	BASE	EMITTER
Q1 & Q2	*3.0Ω	0.2Ω

*MEASURED AT 70° F AMBIENT

SCHEMATIC & OUTLINE DIAGRAM

SPEAKER-AMPLIFIER
MODEL 4EZ18A13

PARTS LIST

LBI-4238A

SPEAKER-AMPLIFIER
MODEL 4EZ18A13 (19D402449G16)

SYMBOL	GE PART NO.	DESCRIPTION
		- - - - - - - - - LOUDSPEAKERS - - - - - - - -
LS2	5491260P7	Permanent magnet, 5-inch: 3.2 ohms ±10% voice coil imp, 15 w max operating, 385 Hz ±15% resonance, paper dust cap; sim to Jensen Model P5-VAS12761.
		- - - - - - - - - - - PLUGS - - - - - - - - - -
P1	4036731P1	Contact, friction: sim to Bead Chain M152-30.
P2	4029840P1	Contact, electrical: sim to AMP 41854.
P3	4029840P2	Contact, electrical: sim to AMP 42827-2.
		- - - - - - - - - TRANSISTORS - - - - - - - - -
Q1 and Q2	5490810P1	Germanium, PNP.
		- - - - - - - - - - RESISTORS - - - - - - - - -
R4	3R78P100J	Composition: 10 ohms ±5%, 1 w.
R5	3R78P111J	Composition: 110 ohms ±5%, 1 w.
R8	3R78P111J	Composition: 110 ohms ±5%, 1 w.
R9	3R78P221J	Composition: 220 ohms ±5%, 1 w.
		- - - - - - - - - THERMISTORS - - - - - - - - -
RT1	19C300048P3	Disc: 1 ohm ±10%.
		- - - - - - - - - TRANSFORMERS - - - - - - - -
T1	19B209220P1	Audio freq: 0.3-3 KHz freq range nominal, Pri: 0.17 ohm DC res max, Sec: 5.2 ohms DC res max.
T2	19B209218P1	Audio freq: 0.3-3 KHz freq range nominal, 0.3 ohm DC res max.
		- - - - - - - TERMINAL BOARDS - - - - - - - - -
TB1		BOARD 19A121707G1
		- - - - - - - JACKS AND RECEPTACLES - - - - - -
J1 thru J3	4033513P12	Contact, electrical: sim to Bead Chain L93-3.
TB2		BOARD 19A121291G1
		- - - - - - - JACKS AND RECEPTACLES - - - - - -
J1 thru J3	4033513P12	Contact, electrical: sim to Bead Chain R125-17.
J4 thru J6	4033513P4	Contact, electrical: sim to Bead Chain L93-3.
		- - - - - - - - - - CABLES - - - - - - - - - -
W4	19B205410G1	Power: 4-conductor, 300 VRMS, approx 4 feet (modified).
P702	5493018P2	Plug, phen: 5 contacts; sim to Cinch 204-31-05-010.
		MECHANICAL PARTS (SEE RC-2138)
1	19B216269G1	Housing.
2	19B201806P5	Insert.
3	19B201806P2	Insert.
4	4036835P1	Terminal: solder; sim to Shakeproof 2118-10-01-2520N.
5	4032596P1	Nut: No. 10-32.
6	N405P9C13	Lockwasher: No. 10.
7	19A115221P3	Insulator, washer: mica.
8	4031291P1	Insulator: approx 1-1/8 inch dia.
9	5490407P6	Grommet, rubber. (Upper)
10	4034215P2	Bushing: approx 3/8 inch dia.
11	4034225P1	Flatwasher: approx 1/2 inch dia.
12	19A121521G1	Mounting support.
13	19A121711P1	Insulator: approx 2-1/2 x 3/4 inches.
14	4038072P2	Speed nut: sim to Tinnerman C8092-632-1.
15	19A115470P1	Grommet, rubber: (Lower) sim to Atlantic India Rubber 2279 (without hole).
16	19B204603G2	Chassis.
17	19A121645P1	Insulator.
18	7150186P105	Spacer.
19	19A121550G3	Rear Cover.
20	19A115495P1	Screw, hexhead: No. 1/4-20 x 5/8. (Secures housing to mounting bracket).

*COMPONENTS ADDED, DELETED OR CHANGED BY PRODUCTION CHANGES

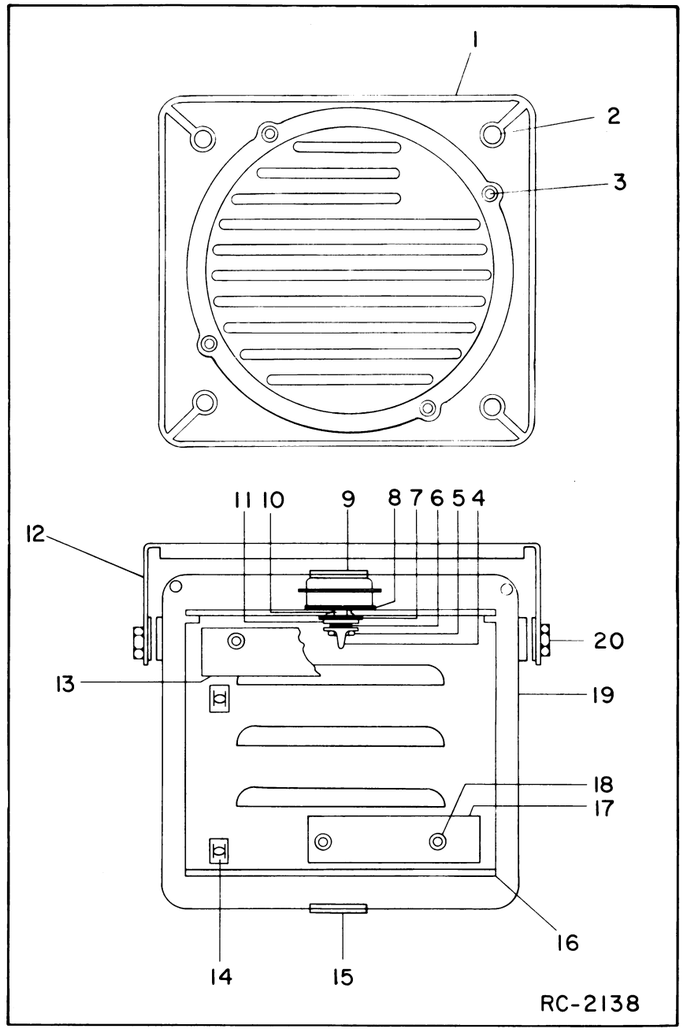

PARTS LIST

LBI-4360

SPEAKER
MODEL 4EZ16A22
19D402449G17

SYMBOL	GE PART NO.	DESCRIPTION
		- - - - - - - - - LOUDSPEAKERS - - - - - - - - -
LS4	5491260P3	Permanent magnet, 5-inch: 8 ohms ±10% voice coil imp, 15 w max operating, 345 Hz ±15% resonance, paper dust cap; sim to Jensen Model P5-VA.
		- - - - - - - - - - - PLUGS - - - - - - - - - -
P702		(Part of W5).
		- - - - - - - - - - CABLES - - - - - - - - - -
W5		CABLE ASSEMBLY 19A122167G1
		- - - - - - - - - - - PLUGS - - - - - - - - - -
P702	5493018P2	Plug, phenolic: sim to Cinch Mfg 204-31-05-010.
	5493018P4	Hood.
		- - - - - - - - MISCELLANEOUS - - - - - - - - -
	19A121521G1	Mounting bracket.
	NP243513	Nameplate. (GE MASTR).
	5490407P33	Rubber grommet. (Top)
	19A115470P1	Rubber grommet. (Bottom)
	N403P13C	Lockwasher, No. 6. (Used to secure LS4).
	N80P13006C6	Screw: No. 6-32 x 3/8. (Used to secure LS4).
	19A121550G3	Rear cover.
	19A115495P1	Screw, hexhead: No. 1/4-20 x 5/8. (Secures housing to mounting bracket).
	19B216269G1	Housing.
	19B201806P5	Insert. (for cover).
	19B201806P2	Insert. (for LS4).

*COMPONENTS ADDED, DELETED OR CHANGED BY PRODUCTION CHANGES

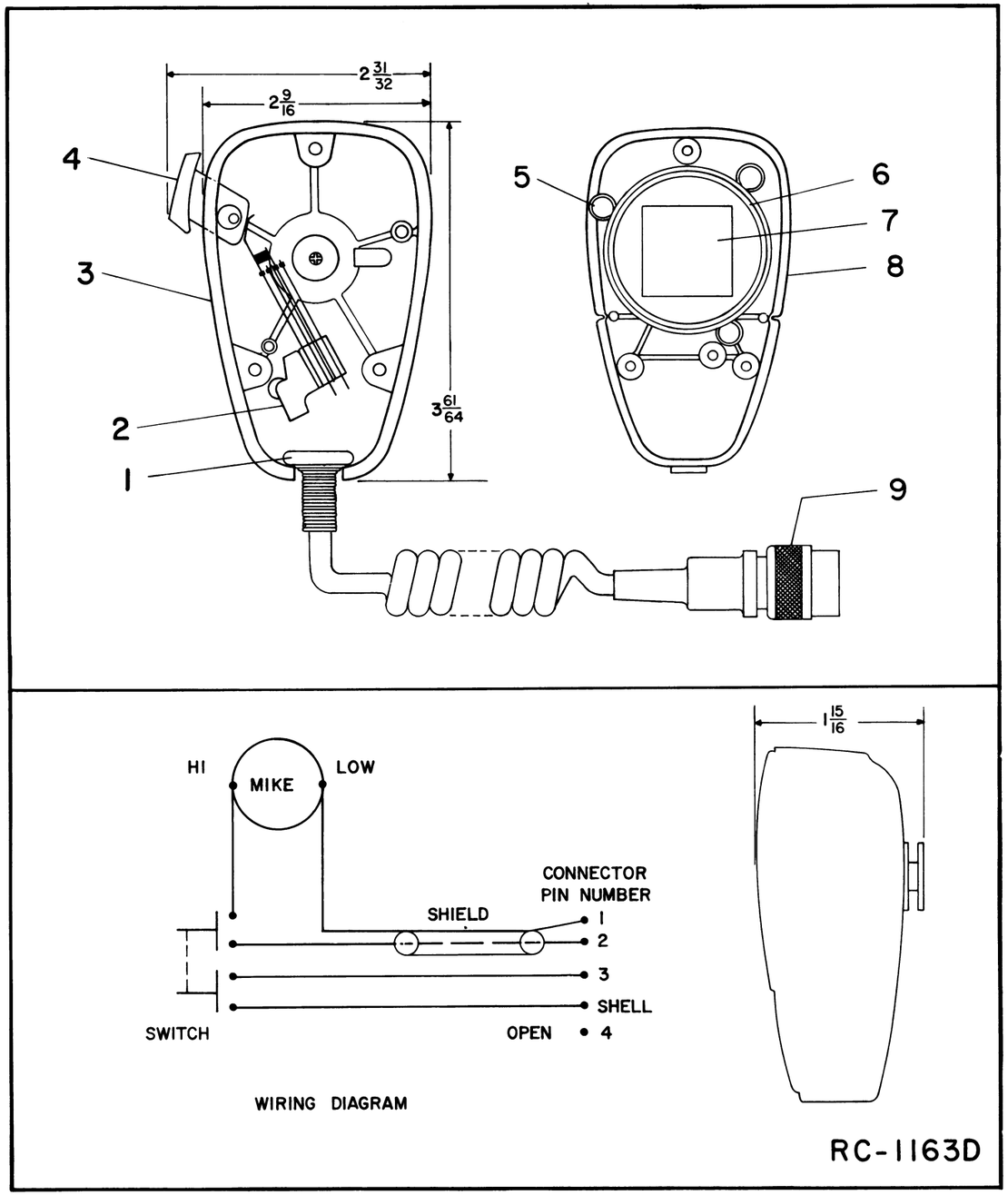

PARTS LIST

LBI-4236

MICROPHONE
MODEL 4EM25E10
(19B209102P2)
(SEE RC-1163)

SYMBOL	GE PART NO.	DESCRIPTION
1		Cable clamp. Shure Brothers RP16.
2		Switch. Shure Brothers RP26.
3		Case (back) and mounting button: plastic. Shure Brothers RP96. (RP96 also includes item 8).
4		Switch button: gray plastic. Shure Brothers RP97.
5		Spring. Shure Brothers RP1.
6		Shield. Shure Brothers RP23.
7		Magnetic controlled cartridge. Shure Brothers RP13.
8		Case (front) plastic. Shure Brothers RP96. (RP96 also includes item 3).
9		Cable and plug: approx 6 feet long. Shure Brothers RP14.

*COMPONENTS ADDED, DELETED OR CHANGED BY PRODUCTION CHANGES.

SCHEMATIC & OUTLINE DIAGRAM

MILITARY MICROPHONE 4EM25E10

PARTS LIST
LBI-4237

HANDSET MODEL 4EM26C10
AND
HOOKSWITCH 19B204867G7

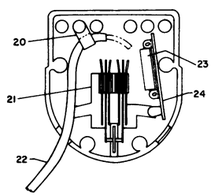

HOOKSWITCH

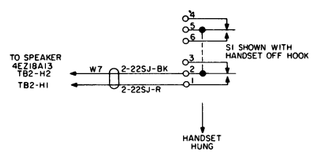

HOOKSWITCH
WIRING DIAGRAM

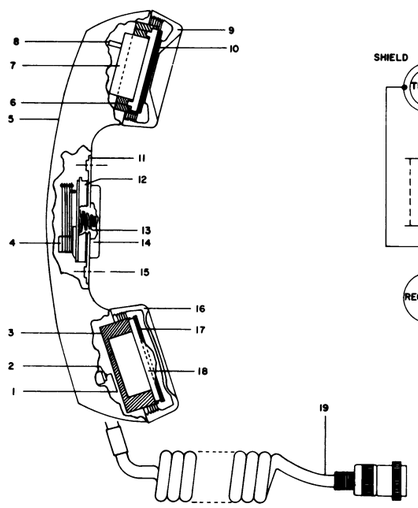

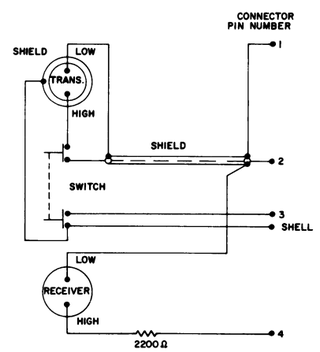

HANDSET
WIRING DIAGRAM

SYMBOL	GE PART NO.	DESCRIPTION
		HANDSET 19B209100P3
1		Self tap screw, bind head: No. 4 x 5/16. Shure Brothers 30C640C.
2		Cable clamp. Shure Brothers 53A532.
3		Shield. Shure Brothers RP19.
4		Switch. Shure Brothers RP81.
5		Case, Shure Brothers 21RP899F.
6		Adapter. Shure Brothers 65A230.
7		Magnetic controled cartridge. Shure Brothers RP41.
8	3R77P222K	Resistor, composition: 2200 ohms ±10%, 1/2 w.
9		Receiver cap. (Part of item 5).
10		Washer. Shure Brothers 34A321.
11		Escutcheon. Shure Brothers 53A536A.
12		Actuator. Shure Brothers 53A556.
13		Spring. Shure Brothers 44A140.
14		Plunger bar. Shure Brothers RP82.
15		Flat head screw, socket cap: No. 4-40 x 1/4. Shure Brothers 30C557B.
16		Transmitter cap. (Part of item 5).
17		Washer. Shure Brothers 34A309.
18		Magnetic controled cartridge, Transmitter. Shure Brothers RP13.
19		Cable and plug. Shure Brothers 21RP738F.
		HOOKSWITCH ASSEMBLY 19B204867G7
20	4029851P12	Cable clamp; sim to Weckesser 1/8-4-140.
21	19A121612P1	Holder and switch: thermoplastic case, contact rating 1 amp at 125 v.
22	19A128059P1	Cable: approx 3 feet long.
23		(Not Used).
24		(Not Used).

*COMPONENTS ADDED, DELETED OR CHANGED BY PRODUCTION CHANGES.

SCHEMATIC & OUTLINE DIAGRAM

HANDSET MODEL 4EM26C10 &
HOOKSWITCH 19B204867-G7

VOLTAGE READINGS FOR 4EP63A12

Except for readings at (L) and (M), these voltage readings are typical DC readings measured with GE Test Set 4EX3A10, 4EX8K11 or equivalent 20,000 ohms-per-volt meter, and measured from the metering point shown to component board ground. AC readings measured with an AC-VTVM.

	Metering Point	With No Battery	High Charge Rate (Charge Light On)	Trickle Charge (Charge Light Off)
(A)	Input Voltage at H7	13.6 V	13.6 V	13.6 V
(B)	Q3 Emitter	15.2 V	7.5 - 8.4 V	8.1 - 8.5 V
(C)	Q3 Base	15.8 V	8.1 - 9.1 V	4.9 V
(D)	Rectifier Output Junction of CR5 and R3	16 V	14.8 V	15.7 V
(E)	Q4 Collector	15.8 V	8.1 - 8.9 V	0.9 V
(F)	Q4 Base			0.7 V
(G)	Q5 Collector	0.08 V	0.8 V	0.6 V
(H)	Q5 Base	0.74 V	0.2 - 0.35 V	0.3 V
(J)	Junction of R8 and R10	8 V	1.6 V	1.6 V
(K)	Junction of R12 and VR3	4.9 V	.45 - .6 V	4.2 V
(L)	H9	13.6 DC 15.0 AC	13.6 DC 15.0 AC	13.6 DC 15.0 AC
(M)	H16	13.6 DC 15.0 AC	13.6 DC 15.0 AC	13.6 DC 15.0 AC
(N)	Junction of R19 and R20	6.5 VDC	6.0 VDC	6.5 VDC

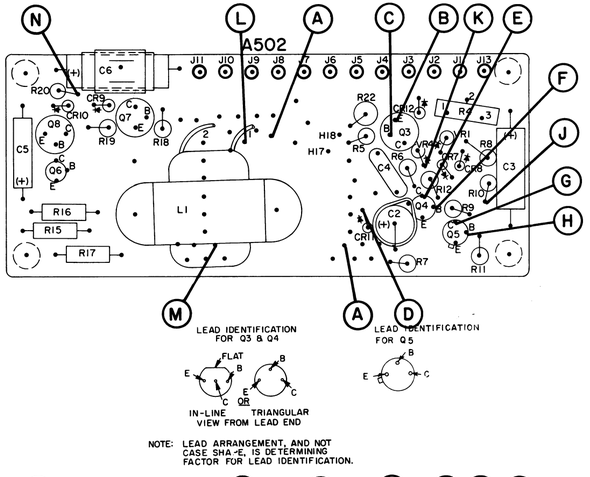

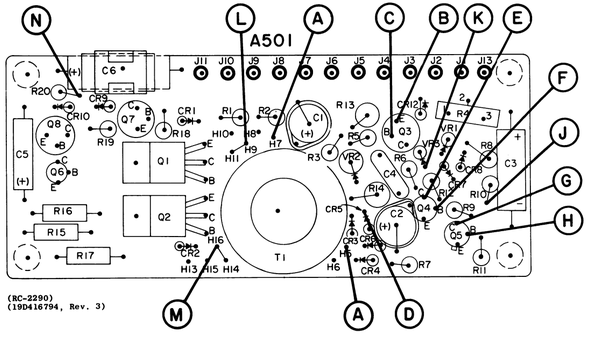

(RC-2290)
(19D416794, Rev. 3)

VOLTAGE READINGS FOR 4EP63A13

These voltage readings are typical DC readings measured with GE Test Set 4EX3A10, 4EX8K11 or equivalent 20,000 ohms-per-volt meter, and measured from the metering point shown to component board ground.

	Metering Point	With No Battery	High Charge Rate (Charge Light On)	Trickle Charge (Charge Light Off)
(A)	Input Voltage at H5	13.6 V	13.6 V	13.6 V
(B)	Q3 Emitter	12.1 V	7.5 - 8.4 V	8.3 V
(C)	Q3 Base	12.7 V	8.1 - 9.1 V	4 - 6 V
(D)	Junction of CR5 and R3	12.8 V	12.5 V	12.6 V
(E)	Q4 Collector	12.7 V	8.1 - 8.9 V	0.65 V
(F)	Q4 Base	0.1 V		0.65 V
(G)	Q5 Collector	0.1 V	0.5 - 0.7 V	0.7 V
(H)	Q5 Base	0.7 V	0.2 - 0.3 V	0.3 V
(J)	Junction of R8 and R10	5.0 V	1.5 V	1.5 V
(K)	Junction of R12 and VR3	2.0 V	0.45 - 0.6 V	1.6 V
(N)	Junction of R19 and R20	6.5 VDC	6.0 VDC	6.5 VDC

QUICK CHECKS

SYMPTOM	CHECK FOR:
Battery will not charge at the high rate (charge light won't come on).	1. Open DS501, F502 or F501 2. Defective Q3 3. Q5 not resetting charging circuit 4. Open C3, or battery contact damaged 5. On 4EP63A12, voltage input jumpers connected incorrectly
Battery pack won't charge at high rate.	1. Defective or excessively discharged battery 2. Defective VR3, R4, VR1, or R4 improperly adjusted
Charger switches to trickle charge too soon.	1. Improper adjustment of R4 - NOTE - A new battery will not reach full charge on 1st or 2nd charge-discharge cycle
Charger remains on high charge rate.	1. Improper adjustment of R4, or R4 defective 2. Shorted Q3 or open Q4 3. Shorted Q5 or Q3 4. On 4EP63A12, voltage input jumpers connected incorrectly
Audio Amplifier won't work	1. Defective Q6, Q7 or Q8 2. CR9 or CR10 open 3. Check resistors R15 through R20

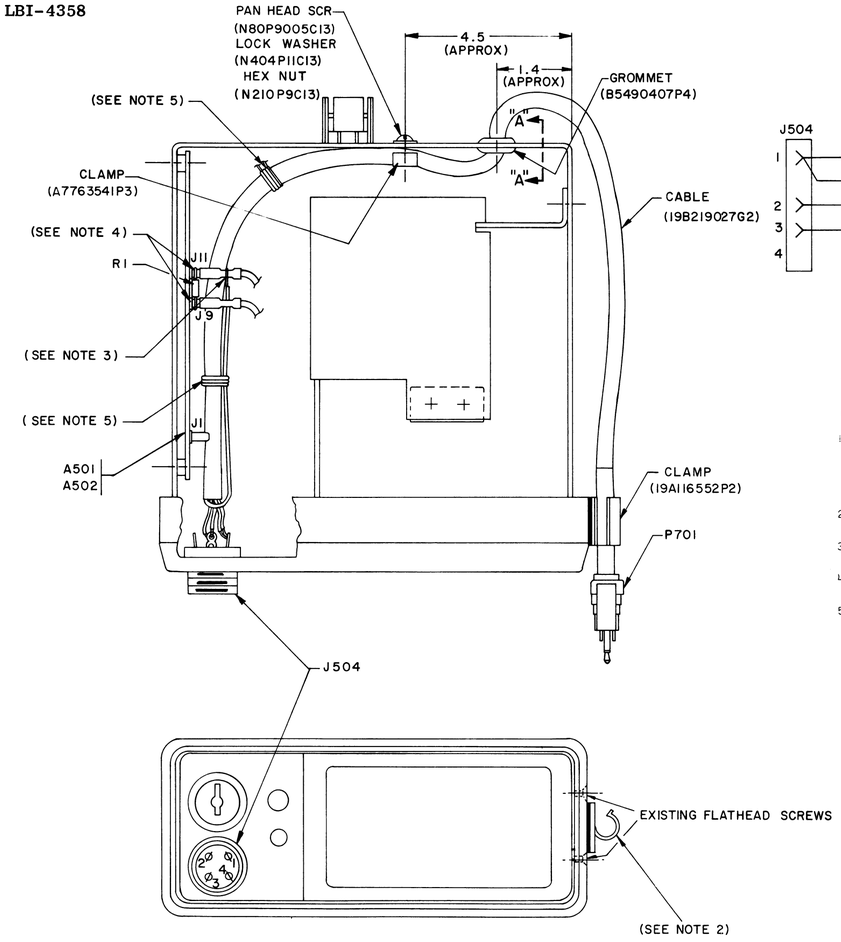

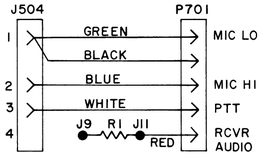

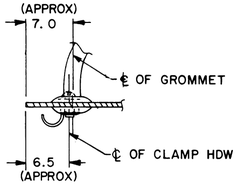

THESE INSTRUCTIONS COVER INSTLLATION OF MOD KIT 19A129195.

NOTES:

1. REMOVE EXISTING PLUG BUTTON AND REPLACE WITH GROMMET (B5490407P4). ATTACH CLAMP (A7763541P3) IN POSITION SHOWN AND SECURE WITH SCREW, LOCK-WASHER & NUT. ROUTE CABLE (19B21902 7G2) THROUGH GROMMET AND CLAMP AS SHOWN AND SOLDER WIRES OF CABLE TO J504 IN ACCORDANCE WITH WIRING DIAGRAM.
2. STICK CLAMP (19A116552P2) TO SIDE OF UNIT, IN POSITION SHOWN.
3. SOLDER RED WIRE OF CABLE (19B21902 7G2) TO FEMALE CONNECTOR ON J11 AND SOLDER IN POSITION SHOWN.
4. SOLDER RESISTOR R1 (3R152P201J) BETWEEN J9 AND J11 OF BOARD A501 OR A502, IN POSITION AS SHOWN.
5. TIE IN CABLE (19B21902 7G2) WITH WIRE HARNESS TO KEEP IT AWAY FROM MOVING CLAMP.

(19C320049, Rev. 2)

INSTALLATION DIAGRAM

ADAPTOR CABLE 19A129195G1

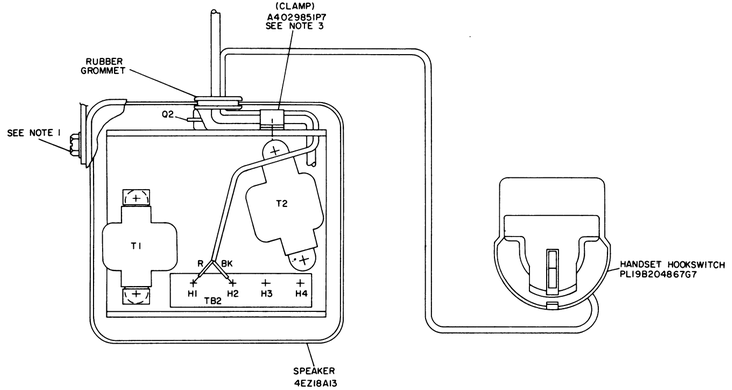

CONNECTION CHART		
FROM	TO	WIRE COLOR
HOOKSWITCH	TB2-H1	2-22SJ-R
HOOKSWITCH	TB2-H2	2-22SJ-BK

INSTRUCTIONS:
1. DETACH FRONT COVER OF SPEAKER, BY REMOVING 4 SCREWS.
2. REMOVE WIRE BETWEEN TB2-H1 AND TB2-H2.
3. REMOVE CABLE CLAMP AND DISCARD, REPLACE WITH NEW CABLE CLAMP.
4. ROUTE CABLE FROM HANDSET HOOKSWITCH THROUGH RUBBER GROMMET IN TOP OF SPEAKER, AND ALSO NEW CABLE CLAMP, MAKE WIRE CONNECTIONS PER CHART.
5. SOLDER ALL ELECTRICAL CONNECTIONS.
6. REPLACE FRONT COVER AND SECURE ALL SCREWS.

(19C317629, Rev. 1)

INSTALLATION DIAGRAM

HANDSET MODEL 4EM26C10 &
HOOKSWITCH 19B204867G7

ORDERING SERVICE PARTS

Each component appearing on the schematic diagram is identified by a symbol number, to simplify locating it in the parts list. Each component is listed by symbol number, followed by its description and GE Part Number.

Service parts may be obtained from Authorized GE Communication Equipment Service Stations or through any GE Radio Communication Equipment Sales Office. When ordering a part, be sure to give:

1. GE Part Number for component
2. Description of part
3. Model Number of equipment
4. Revision letter stamped on unit

MAINTENANCE MANUAL

LBI-4358

MOBILE RADIO DEPARTMENT
GENERAL ELECTRIC COMPANY • LYNCHBURG, VIRGINIA 24502

GENERAL ELECTRIC

PRINTED IN U.S.A.