MAINTENANCE MANUAL

SYNTHESIZER BOARD
19C851880G15 (403-440 MHz)
19C851880G16 (440-470 MHz)
19C851880G17 (470-512 MHz)

TABLE OF CONTENTS

DESCRIPTION

The Synthesizer Board 19C851880G15, 16 or 17 (403-440 MHz, 440-470 MHz or 470-512 MHz respectively) generates all transmit and receive RF frequencies for the MPI-II Personal Radio. The frequency synthesizer circuit generates the transmit carrier frequency and the first mixer injection frequency for the receive circuit. This circuit uses a phase-locked Voltage Controlled Oscillator (VCO) operating on the actual transmitter frequency (403-512 MHz) during transmit and 45 MHz below the actual receive frequency during receive. The Synthesizer Board plugs into the Transmit/Receive Board at P5 and P6. See Figure 1 for the Synthesizer Block Diagram.

CIRCUIT ANALYSIS

The synthesizer frequency output is controlled by the microprocessor on the Transmit/Receive Board. Frequency stability is maintained by a temperature compensated crystal controlled reference oscillator (TCXO) module (U203). The oscillator has a stability of ±5 PPM over the temperature range of -30°C to 60°C and determines the overall frequency stability of the radio.

The synthesizer output signal is generated directly by VCO module U204. The output from U204 is fed through a low pass filter to the Prescaler U202, with output SYNTH to the Local Oscillator buffer Q421 and the Power Amplifier buffer Q102. The Local Oscillator and the Power Amplifier are located on the T/R Board. The VCO output is also buffered by transistor Q201 to feed divide-by 128/129 dual modulus prescaler U202. The prescaler feeds the Fin input of the Phase-Lock-Loop (PLL) chip U201.

Within U201, the prescaler signal is further divided down to 12.5 kHz to be compared with a reference signal. This reference signal is derived by division within U201 from the 12.8 MHz output of the TXCO module U203. Divider circuits in U201 are programmed by three inputs from the microprocessor on the T/R Board. These are SYN ENABLE, SYN DATA and SYN CLOCK lines. A LOCK DETECT line from the PLL chip to the T/R Board microprocessor is used to prevent transmissions when the synthesizer is unlocked. A pulsed beep will be sounded if this condition occurs.

Audio modulation from the T/R Board is applied to the Synthesizer Board at P6-2. Audio Modulation then goes to Mod Pot R230 to adjust the modulation level. The output from the Mod Pot is summed with the unfiltered control voltage and fed to operational amplifier U206.2. Amplifier U206.2 is biased to produce gain variation with different control voltages. When the control voltage is below 1.7 volts, both diodes in diode package D201 are biased off. The op amp gain is then unity. As the control voltage rises above approximately 1.7 volts, one of the diodes (D201) is forward biased. This increases the op amp gain to approximately 1.2. Further increases in the control voltage above approximately 2.5 volts turns both diode paths on , thus increasing gain to about 1.4. Gain variation versus control voltage compensates for decreasing VCO gain at higher control voltages. The net affect of this is to linearize the loop response across the frequency band to maintain relatively constant audio modulation and constant digital Channel Guard waveshape.

The synthesizer enable line also drives bilateral switches U205.2 and U205.3. The pulse applied to these gates, when channel changes occur, turns the gates on which shorts out resistors R224 and R225. This allows rapid channel acquisition.

During Standby operation, the Synthesizer 5.4 volts is switched ON for 25 ms and OFF for 75 ms. In order to facilitate channel acquisition during Standby operation, bilateral switch U205.1 is driven by the Synthesizer data line to quickly determine if a carrier with the proper signaling tone is present. If no carrier or a carrier with incorrect tone is detected, the radio remains in Standby. If a carrier with the proper tone is detected, the Synthesizer 5.4 volts is switched ON continuously until the carrier and/or the tone is removed.

A delay and isolation circuit is applied to the output of the VCO to prevent unwanted Synthesizer output before the VCO has locked and settled on frequency. This is necessary to prevent excessive L.O. leakage at the antenna terminal. Components of this circuit are R239-R247, C231-C233, Q203, Q204, D202. When the Synth. 5.4V is applied in receive mode, D202 is reversed biased to maximize isolation. "Enable" pulse is applied to Q204 and Q205, delayed by five milliseconds (set by R239, R240, C231), whereupon the transistor pair "latches up" and forward biases D202, connecting the VCO output to the "Synthesizer Output" pin (P5-6).

ERICSSON

Ericsson GE Mobile Communications Inc.
Mountain View Road • Lynchburg, Virginia 24502

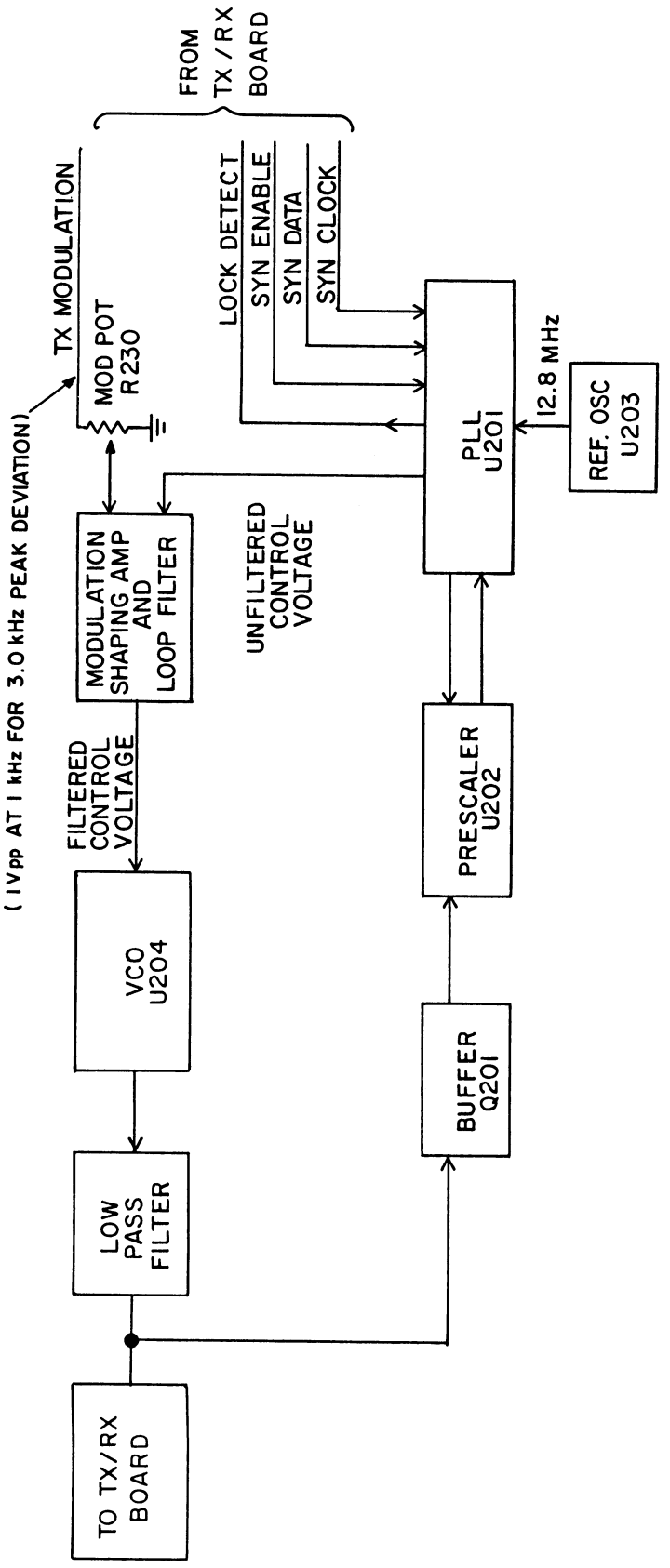

Figure 1 - Synthesizer Block Diagram

SYNTHESIZER BOARD

COMPONENT SIDE

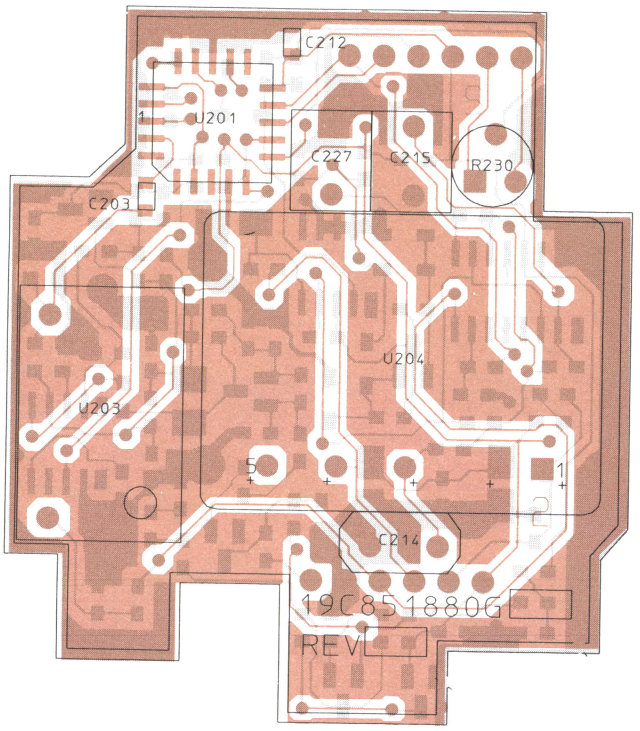

(19C851880, Sh. 2, Rev. 0)
(19D903401, Component Side, Rev. 2)
(19D903401, Solder Side, Rev. 2)

SOLDER SIDE

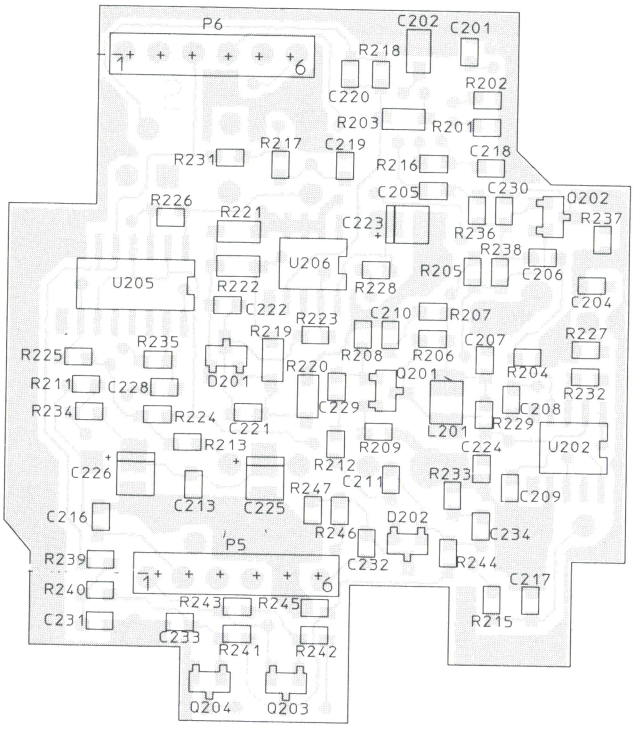

BACK SIDE VIEW

(19C851880, Sh. 2, Rev. 0)
(19D903401, Solder Side, Rev. 2)

CAUTION
OBSERVE PRECAUTIONS FOR HANDLING
ELECTROSTATIC SENSITIVE DEVICES

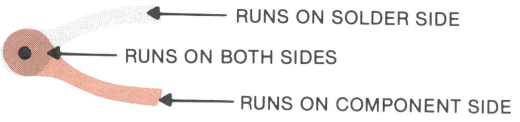

SYNTHESIZER BOARD
19C851880G15, 16 & 17

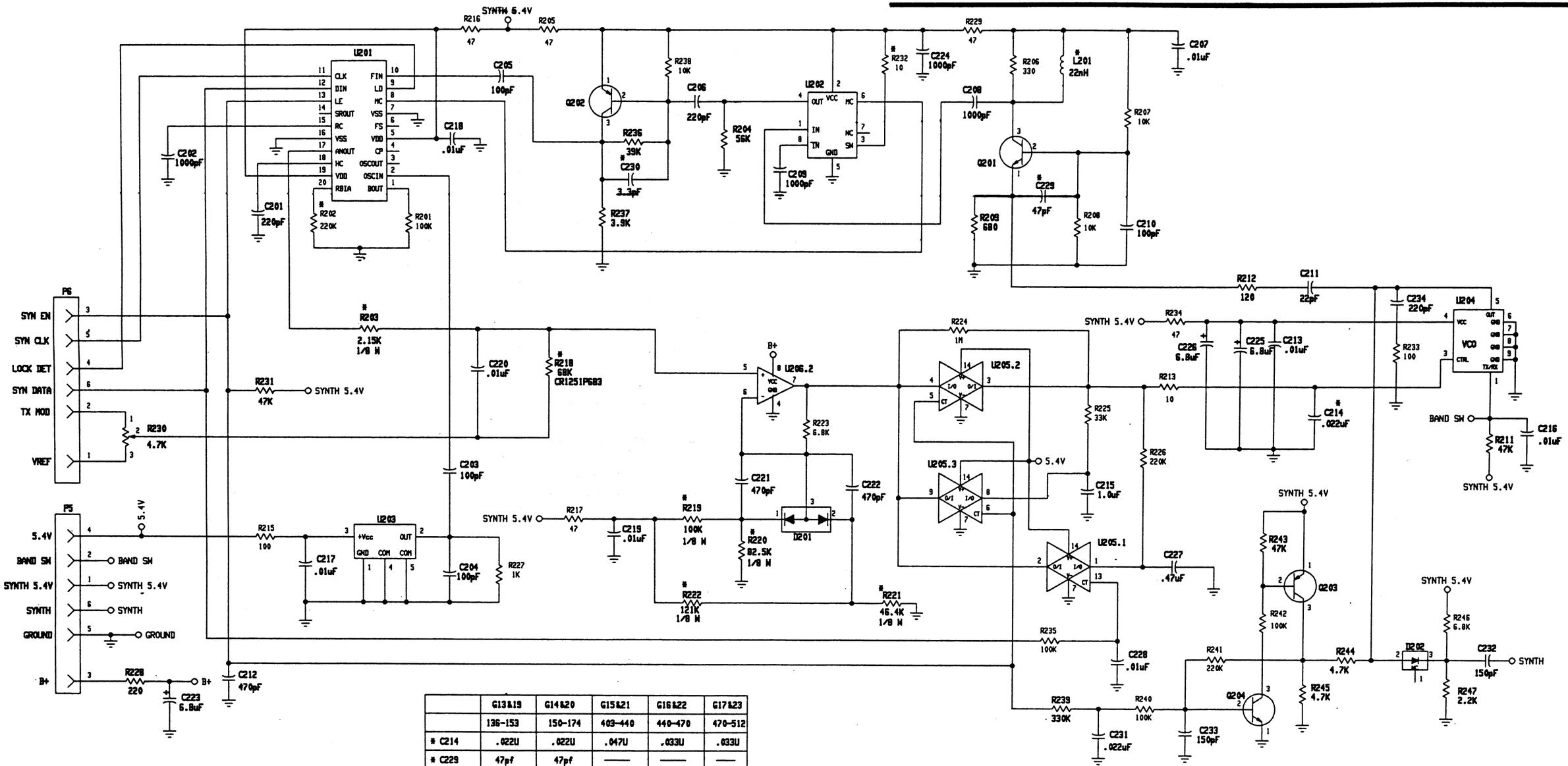

ALL RESISTORS ARE 0.1 WATT UNLESS OTHERWISE SPECIFIED AND RESISTORS VALUES ARE IN OHMS UNLESS FOLLOWED BY MULTIPLIER K OR M.
CAPACITOR VALUES IN F UNLESS FOLLOWED BY MULTIPLIER U, N OR P
INDUCTANCE VALUES IN H UNLESS FOLLOWED BY MULTIPLIER M OR U

THESE MECHANICAL VARIANTS APPLY TO MODEL NO.	REV LETTER
19C851880G13	A
19C851880G14	A
19C851880G15	A
19C851880G16	A
19C851880G17	A

	G13&19	G14&20	G15&21	G16&22	G17&23
	136-153	150-174	403-440	440-470	470-512
* C214	.022U	.022U	.047U	.033U	.033U
* C229	47pf	47pf	——	——	——
* R202	150K	220K	100K	100K	100K
* R203	3.16K	2.15K	2.15K	2.15K	2.15K
* R218	68K	68K	150K	100K	100K
* R219	61.9K	100K	100K	100K	100K
* R220	46.4K	82.5K	46.4K	68.1K	68.1K
* R221	39.2K	46.4K	39.2K	39.2K	39.2K
* R222	100K	121K	46.4K	121K	121K
* R232	10	10	——	——	10
*L201			22n	22n	22n
*C230	3.3P	3.3P	3.3P	3.3P	1.5P

SYNTHESIZER BOARD

SYNTHESIZER BOARD
19C851880G15, 16 & 17

(19D903492, Sh. 1, Rev. 4)

SYNTHESIZER BOARD
19C851880G15 403-440 MHz
19C851880G16 440-470 MHz
19C851880G17 470-512 MHz
ISSUE 1

SYMBOL	PART NO.	DESCRIPTION
		CAPACITORS
C201	19A702061P69	Ceramic: 220 pF ±5%, 50 VDCW, temp coef 0 ±30 PPM/°C.
C202	19A702061P99	Ceramic: 1000 pF ±5%, 50 VDCW, temp coef 0 ±30 PPM/°C.
C203 thru C205	19A702061P61	Ceramic: 100 pF ±5%, 50 VDCW, temp coef 0 ±30 PPM.
C206	19A702061P69	Ceramic: 220 pF ±5%, 50 VDCW, temp coef 0 ±30 PPM/°C.
C207	19A702052P14	Ceramic: 0.01 uF ±10%, 50 VDCW.
C208 and C209	19A702052P5	Ceramic: 1000 pF ±10%, 50 VDCW.
C210	19A702061P61	Ceramic: 100 pF ±5%, 50 VDCW, temp coef 0 ±30 PPM.
C211	19A702061P29	Ceramic: 22 pF ±5%, 50 VDCW, temp coef 0 ±30 PPM.
C212	19A702061P77	Ceramic: 470 pF ±5%, 50 VDCW, temp coef 0 ±30 PPM.
C213	19A702052P14	Ceramic: 0.01 uF ±10%, 50 VDCW.
C214	T644ACP347K	Polyester: .047 uF ±10%, 50 VDCW. (Used in G15).
C214	T644ACP333K	Polyester: .033 uF ±10%, 50 VDCW. (Used in G16 and G17).
C215	344A3532P2	Metallized polyester: 1.0 uF ±10%, 63 VDCW.
C216 thru C220	19A702052P14	Ceramic: 0.01 uF ±10%, 50 VDCW.
C221 and C222	19A702061P77	Ceramic: 470 pF ±5%, 50 VDCW, temp coef 0 ±30 PPM.
C223	19A705205P5	Tantalum: 6.8 uF, 10 VDCW; sim to Sprague 293D.
C224	19A702052P5	Ceramic: 1000 pF ±10%, 50 VDCW.
C225 and C226	19A705205P5	Tantalum: 6.8 uF, 10 VDCW; sim to Sprague 293D.
C227	344A3532P1	Metallized polyester: .47 uF ±10%, 63 VDCW.
C228	19A702052P14	Ceramic: 0.01 uF ±10%, 50 VDCW.
C230	19A702236P13	Ceramic: 3.3 pF ±.5%, 50 VDCW, temp coef 0 ±30 PPM. (Used in G15 and G16).
C230	19A702236P8	Ceramic: 1.5 pF ±.25 pF, 50 VDCW. (Used in G17).
C231	19A702052P30	Ceramic: 0.022 uF ±10%, 50 VDCW.
C232	19A702236P54	Ceramic: 150 pF ±5%, 500 VDCW, temp coef 0 ±30 PPM/°C.
C233		
C234	19A702061P69	Ceramic: 220 pF ±5%, 50 VDCW, temp coef 0 ±30 PPM/°C.
		DIODES
D201	19A703561P2	Silicon, fast recovery (2 diodes in series).
D202	19A702525P2	Silicon, PIN: sim to MMBV3401.

* COMPONENTS ADDED, DELETED OR CHANGED BY PRODUCTION CHANGES

SYMBOL	PART NO.	DESCRIPTION
		INDUCTORS
L201	19A705470P5	Coil, Fixed: 22 nH; sim to Toko 380NB-22nM.
		PLUGS
P5 and P6	344A3641P1	Connector, printed wire, 2 part, 6 position; sim to SEP 12664-01.
		TRANSISTORS
Q201	19A704708P2	Silicon, NPN: sim to NEC 2SC3356.
Q202 and Q203	19A700059P2	Silicon, PNP: sim to MMBT3906, low profile.
Q204	19A700076P2	Silicon, NPN: sim to MMBT3904, low profile.
		RESISTORS
R201 and R202	19B801251P104	Metal film: 100K ohms ±5%, 1/10 w.
R203	19A702931P233	Metal film: 2150 ohms ±1%, 200 VDCW, 1/8 w.
R204	19B801251P563	Metal film: 56K ohms ±5%, 1/10 w.
R205	19B801251P470	Metal film: 47 ohms ±5%, 1/10 w.
R206	19B801251P331	Metal film: 330 ohms ±5%, 1/10 w.
R207 and R208	19B801251P103	Metal film: 10K ohms ±5%, 1/10 w.
R209	19B801251P681	Metal film: 680 ohms ±5%, 1/10 w.
R211	19B801251P473	Metal film: 47K ohms ±5%, 1/10 w.
R212	19B801251P121	Metal film: 120 ohms ±5%, 1/10 w.
R213	19B801251P100	Metal film: 10 ohms ±5%, 1/10 w.
R215	19B801251P101	Metal film: 100 ohms ±5%, 1/10 w.
R216 and R217	19B801251P470	Metal film: 47 ohms ±5%, 1/10 w.
R218	19B801251P154	Metal film: 150K ohms ±5%, 1/10 w. (Used in G15).
R218	19B801251P104	Metal film: 100K ohms ±5%, 1/10 w. (Used in G16 and G17).
R219	19A702931P401	Metal film: 100K ohms ±1%, 200 VDCW, 1/8 w.
R220	19A702931P365	Metal film: 46.4K ohms ±1%, 200 VDCW, 1/8 w. (Used in G15).
R220	19A702931P381	Metal film: 68.1K ohms ±1%, 200 VDCW, 1/8 w. (Used in G16 and G17).
R221	19A702931P358	Metal film: 39.2K ohms ±1%, 200 VDCW, 1/8 w.
R222	19A702931P409	Metal film: 121K ohms ±1%, 200 VDCW, 1/8 w. (Used in G16 and G17).
R222	19A702931P365	Metal film: 46.4K ohms ±1%, 200 VDCW, 1/8 w. (Used in G15).
R223	19B801251P682	Metal film: 6.8K ohms ±5%, 1/10 w.
R224	19B801251P105	Metal film: 1M ohms ±5%, 1/10 w.
R225	19B801251P333	Metal film: 33K ohms ±5%, 1/10 w.
R226	19B801251P224	Metal film: 220K ohms ±5%, 1/10 w.
R227	19B801251P102	Metal film: 1K ohms ±5%, 1/10 w.
R228	19B801251P221	Metal film: 220 ohms ±5%, 1/10 w.
R229	19B801251P470	Metal film: 47 ohms ±5%, 1/10 w.
R230	19B800779P8	Variable, cermet: 4.7K ohms ±25%, .3 w.
R231	19B801251P473	Metal film: 47K ohms ±5%, 1/10 w.

SYMBOL	PART NO.	DESCRIPTION
R232	19B801251P100	Metal film: 10 ohms ±5%, 1/10 w. (Used in G17).
R233	19B801251P101	Metal film: 100 ohms ±5%, 1/10 w.
R234	19B801251P470	Metal film: 47 ohms ±5%, 1/10 w.
R235	19B801251P104	Metal film: 100K ohms ±5%, 1/10 w.
R236	19B801251P393	Metal film: 39K ohms ±5%, 1/10 w.
R237	19B801251P392	Metal film: 3.9K ohms ±5%, 1/10 w.
R238	19B801251P103	Metal film: 10K ohms ±5%, 1/10 w.
R239	19B801251P334	Metal film: 330K ohms ±5%, 1/10 w.
R240	19B801251P104	Metal film: 100K ohms ±5%, 1/10 w.
R241	19B801251P224	Metal film: 220K ohms ±5%, 1/10 w.
R242	19B801251P104	Metal film: 100K ohms ±5%, 1/10 w.
R243	19B801251P473	Metal film: 47K ohms ±5%, 1/10 w.
R244 and R245	19B801251P472	Metal film: 4.7K ohms ±5%, 1/10 w.
R246	19B801251P682	Metal film: 6.8K ohms ±5%, 1/10 w.
R247	19B801251P222	Metal film: 2.2K ohms ±5%, 1/10 w.
		INTEGRATED CIRCUITS
U201	19B800902P5	Synthesizer, custom: CMOS, serial input.
U202	19A149944P204	Prescaler; sim to Motorola MC12022SLB.
U203	19B801351P8	Crystal Oscillator.
U204	19C851916G1	Voltage Controlled Oscillator. (Used in G15).
U204	19C851916G2	Voltage Controlled Oscillator. (Used in G16).
U204	19C851916G3	Voltage Controlled Oscillator. (Used in G17).
U205	19A702705P4	Digital: Quad Analog Switch/Multiplexer; sim to 4066BM.
U206	19A702293P3	Linear: Dual Op Amp; sim to LM358D.

U201:

SYNTHESIZER
19B800902P5

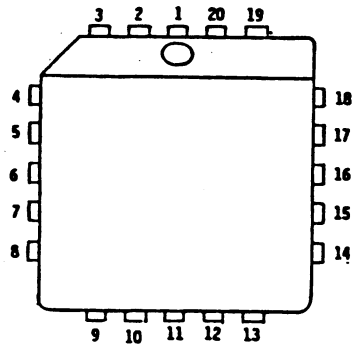

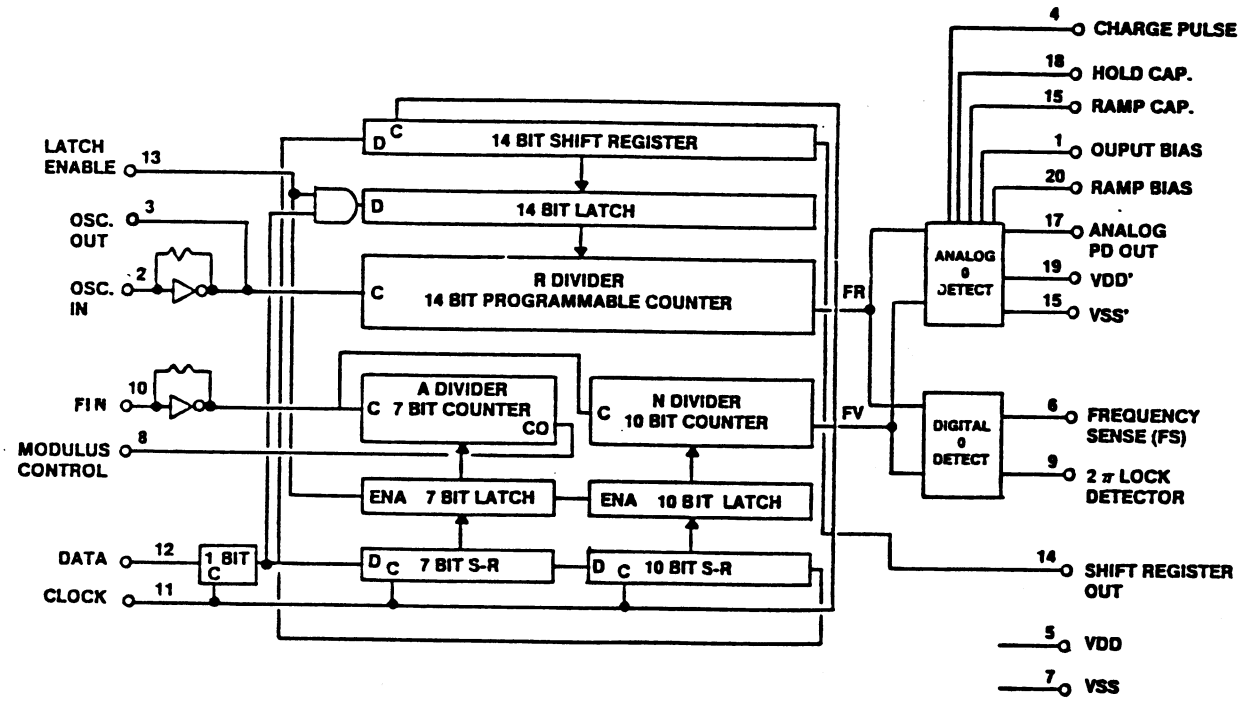

SYNTHESIZER BOARD

PRESCALER
19A149944P201

U202:

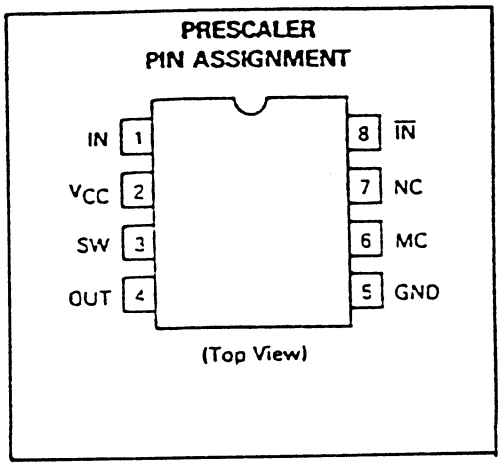

FUNCTION TABLE		
SW	MC	DIVIDE RATIO
H	H	64
H	L	65
L	H	128
L	L	129

SW: H= Vcc L = OPEN
MC: H= 2.0 V TO Vcc
L= GND TO 0.8V

LOGIC DIAGRAM

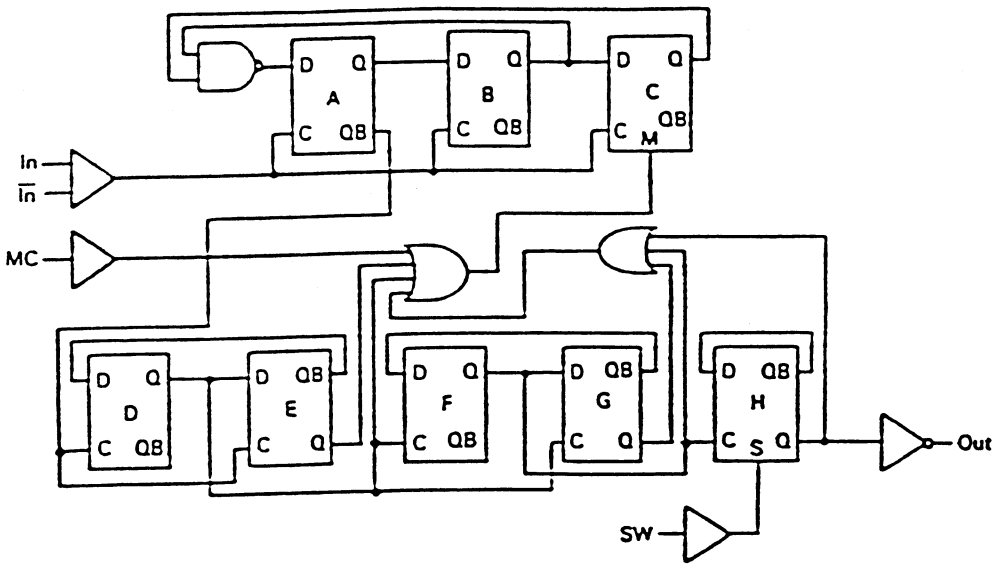

U203:

CRYSTAL OSCILLATOR
19B801351P7,P8 & P13

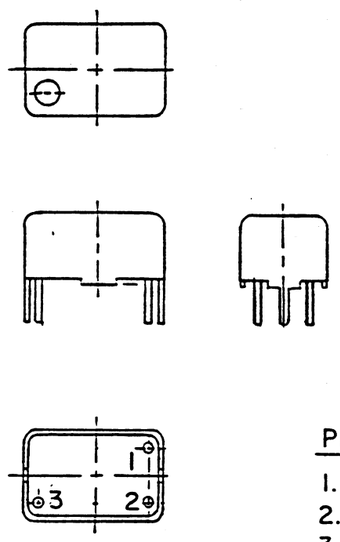

PIN CONNECTIONS

1. COMMON AND CASE
2. OUTPUT
3. + V_{CC}

U205:

QUAD ANALOG SWITCH/MULTIPLEXER
19A702705P1,P4
(CMOS)

PIN CONFIGURATION

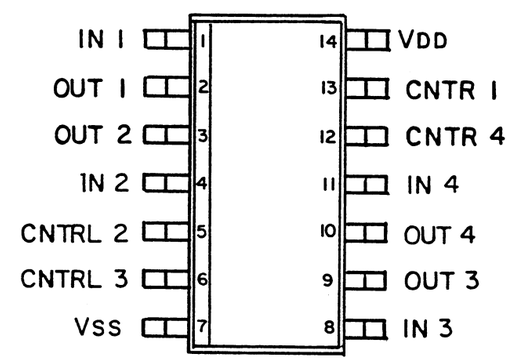

LOGIC DIAGRAM

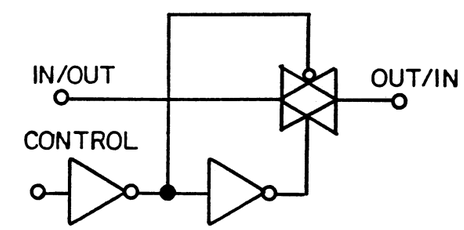

(1/4 OF DEVICE SHOWN)

CONTROL	SWITCH
0	OFF
1	ON

U204:

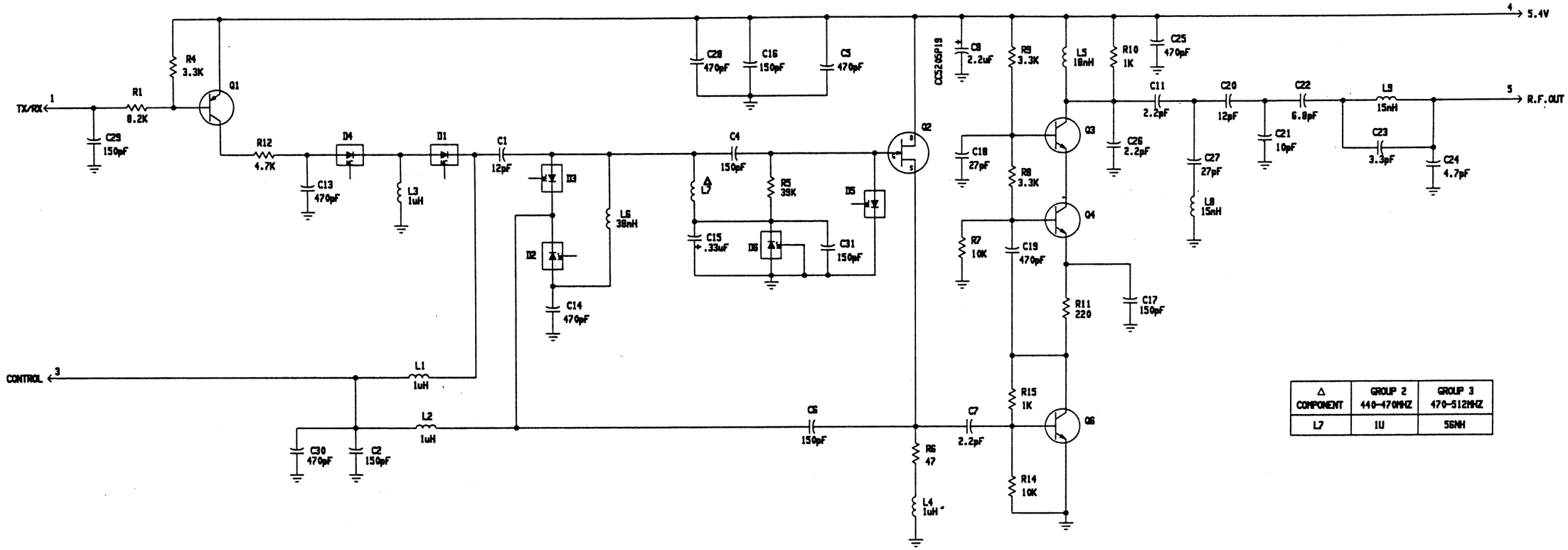

Δ COMPONENT	GROUP 2 440-470MHZ	GROUP 3 470-512MHZ
L7	1U	56NH

ALL RESISTORS ARE 0.1 WATT UNLESS OTHERWISE SPECIFIED AND RESISTORS VALUES ARE IN OHMS UNLESS FOLLOWED BY MULTIPLIER K OR M.
CAPACITOR VALUES IN F UNLESS FOLLOWED BY MULTIPLIER U, N OR P
INDUCTANCE VALUES IN H UNLESS FOLLOWED BY MULTIPLIER M OR U

THIS SCHEMATIC DIAGRAM APPLIES TO

MODEL NO.	REV LETTER
PLI9CB51916G2	A

NOTE: SCHEMATIC DIAGRAM FOR REFERENCE ONLY

(19D902737)

U206:

OPERATIONAL AMPLIFIER

19A702293P2 & P3