MAINTENANCE MANUAL

DISPLAY PANEL ASSEMBLIES

19D438901P1 (Scan), 19D438902P1 (System)
19D438651P1 (Scan), 19D438652P1 (System)

TABLE OF CONTENTS

SPECIFICATIONS*

Input Power		
A+SW	(J1-18)	13.8 volts DC
+5V	(J1-1)	5.0 volts DC
AC PWR	(J1-20)	125.0 volts DC 400 Hz
Maximum Current Drain		
A+SW	(J1-18)	
System	(all LED's off)	0.5 milliamperes DC
System	(all LED's on)	160 milliamperes DC
Scan	(all LED's off)	0.5 milliamperes DC
Scan	(all LED's on)	50 milliamperes DC
+5V	(J1-1)	10 milliamperes DC
AC-PWR	(J1-20)	15 milliamperes AC

SPECIFICATIONS* - Cont'd.

Temperature Range	-30°C (-22°F) to +70°C (+128°F)
Logic Levels	
High (1)	4.0 ± 1.0 volts DC
Low (0)	0.5 ± 0.5 volts DC
Low (0)	

*These specifications are intended primarily for use by service personnel. Refer to the appropriate Specification Sheet for complete specifications.

DESCRIPTION

Display panel assemblies 19D438901P1 (Scan) and 19D438902P1 (System) provide operator interface to the control unit and the radio. Display panel assemblies (19D438651P1) (Scan) and (19D438652P1) (System) were used on earlier versions. The display panels consist of the following parts:

- bezel
- keypad
- electroluminescent (EL) panel
- printed circuit board
- LCD window

The System display panel contains 25 push-buttons, and the Scan unit contains 15 push-buttons. The display panel is backlighted by the EL panel. A photodetector senses the ambient light level to turn off the EL panel in "high light" conditions.

The System display panel also contains 12 push-buttons that have an LED in the upper left corner. This LED flashes when the function is enabled.

The Scan display panel also contains four push-buttons that have a LED in the upper left corner. These LED's also flash where the function is enabled.

Both the System and Scan display panels contain four LED's that are located below the LCD. They are:

- XMIT = Transmitter indicator
- BUSY = Indicates selected channel is busy
- SCAN = Indicates that scan feature is enabled
- S = Indicates that the displayed channel is in the scan list.

CIRCUIT ANALYSIS

For references to symbol numbers used in the following text, refer to the Outline Diagram, Schematic Diagram or Parts List as listed in the Table of Contents.

KEYPAD

Two parallel-to-serial converters (U3 and U4) sample and read out the key closure information from the keyboard. The converters sample the keypad buttons on a low to high transition of the LCD_D0 line (J1-8) when the LCD_D1 line (J1-9) is high.

The keypad button information is serially shifted out of the converters on a low-to-high transition of LCD_D0 line (J1-8) when the LCD_D1 line (J1-9) is low. The serial output of U4 (pin 3) is shifted to the serial input of U3 (pin 11). The serial output of U3 (pin 3) is read by the microcomputer on the processor board.

When a keypad button is depressed, a pair of input lines to the converters are switched to logic ground. The only exception to this is the PWR button, which has only one input line switched to ground. Table 1 shows the key closures, and the corresponding grounded inputs to the converters. Table 2 shows the keypad board inputs and outputs.

The PWR push-button is also sensed by converter U3, and is also applied directly to the processor board. Whenever the control unit is powered down (turned off), the PWR button will power up (turn on) the control unit and radio system. If the PWR control unit is on, and the PWR button is pressed, the button is sensed by the processor board. The control unit is then powered down under control of the microcomputer on the processor board.

Switch Closure	Switch Name/Keypad	System Function	Scan Function	Converter Inputs to Logic Ground	
S1	PWR	Y	Y	U3-1	
S2	FNC	Y	Y	U3-5	U3-4
S3	MODE	Y	Y	U3-13	U3-4
S4	HOME	Y	Y	U3-6	U3-4
S5	CG	Y	Y	U3-13	U3-5
S6	SQL	Y	Y	U3-6	U3-5
S7	VOL ▲	Y	Y	U3-13	U3-7
S8	VOL ▼	Y	Y	U3-6	U3-7
S9	CHAN ▲	Y	Y	U3-13	U3-6
S10	CHAN ▼	Y	Y	U4-1	U4-4
S11	ADD	Y	Y	U4-14	U4-4
S12	SCAN	Y	Y	U4-13	U4-4
S13	DEL	Y	Y	U4-15	U4-4
S14	YELP/1	Y	N	U4-1	U4-5
S15	SL1/4	Y	N	U4-13	U4-5
S16	SL4/7	Y	N	U4-14	U4-5
S17	SPKR/*	Y	N	U4-15	U4-5
S18	RESET/2	Y	N	U4-1	U4-6
S19	SL2/5	Y	N	U4-13	U4-6
S20	SL5/8	Y	N	U4-14	U4-6
S21	AUX1/0	Y	N	U4-15	U4-6
S22	WAIL/3	Y	N	U4-1	U4-7
S23	SL3/6	Y	N	U4-13	U4-7
S24	SL6/9	Y	N	U4-14	U4-7
S25	AUX2/#	Y	N	U4-15	U4-7
S26	SPKR	N	Y	U3-15	U3-14
S27	AUX	N	Y	U3-6	U3-14

Table 1 - Keypad Closure

CODE INPUT LCD_				DISPLAY OUTPUT LCD_(05,04)			
03	02	01	00	0.0	0.1	1.0	1.1
0	0	0	0	@	P		0
0	0	0	1	A	Q	!	1
0	0	1	0	B	R	"	2
0	0	1	1	C	S	#	3
0	1	0	0	D	T	$	4
0	1	0	1	E	U	%	5
0	1	1	0	F	V	&	6
0	1	1	1	G	W	'	7
1	0	0	0	H	X	<	8
1	0	0	1	I	Y	>	9
1	0	1	0	J	Z	*	:
1	0	1	1	K	[	+	;
1	1	0	0	L	\	/	∠
1	1	0	1	M	]	−	=
1	1	1	0	N	↗	.	⌟
1	1	1	1	O	←	/	⌝

DATA DECODING
6-BIT ASCII—18 SEGMENT

RC-5982

Table 2 - LCD 18-Segment Encoding

LCD

LCD DS1 is an eight digit alphanumeric display capable of showing all of the characters shown in Table 2. Each digit of DS1 consists of an 18 segment display. The digit displayed is controlled by LCD_D0 through LCD-D3. The position of each digit displayed is controlled by LCD_D4, LCD_D5, and the rising/falling edge of LCD_EN. The position of the characters on the LCD is shown in Table 3.

LCD drivers U1 and U2 generate the necessary triplexed waveforms to the other display, DS1. The two drivers accept parallel data from the processor board (via LCD_D0 through LCD_D5, LCD_A0, and LCD_A1) to generate the timing waveforms, and to encode the alphanumeric digits to the display.

The triplexed waveforms are generated by three common lines (COM1, COM2, and COM3). They consist of a six-phase periodic waveform, along with segment lines U, V, W, X, Y, and Z. Segment lines U-Z consist of a periodic waveform varying in shape according to the number of LCD segments to be illuminated in a particular segment line column. The six phases of a complete cycle consist of a three-phase portion and the inversion of the three-phase portion.

Temperature compensation of the LCD and LCD drivers is accomplished by the network consisting of Q17, R59, R60, and R61.

LED DISPLAY

The LED displays indicate the state of operation of the radio system. There are a total of 16 LED's (12 flashing and four static) on the System keypad board, and four flashing and four static LED's on the Scan keypad board. The four static LED's are common to both keypad boards.

The flashing LED's normally blink whenever the applicable key is pressed to activate a function. The 4 static LED's are non-blinking in both control units.

The 12 flashing LED's for the System Control Unit are WAIL, SL1, SL2, SL3, SL4, SL5, SL6, SPKR, AUX1, AUX2, YELP, and RESET.

The four flashing LED's on the Scan control unit are SPKR, SQL, CG, and AUX.

DISPLAY LOCATION

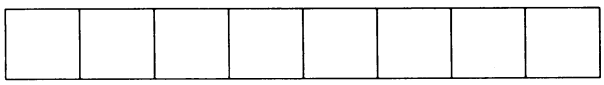

CODE INPUT LCD_A1	LCD_A0	LCD_EN	DISPLAY POSITION
0	0	↗	1 (U2)
0	0	↘	8 (U1)
0	1	↗	2 (U2)
0	1	↘	7 (U1)
1	0	↗	3 (U2)
1	0	↘	6 (U1)
1	1	↗	4 (U2)
1	1	↘	5 (U1)

RC-7233

Table 3 - LCD Digit Position Encoding

The four static LED's are EMIT, BUSY, SCAN, and S.

LED driver devices U5 and U6 drive the base of transistors Q1 through Q14, Q23 and Q24. The inputs to the drivers are LCD_D0 through LCD_D5, LCD_A0, and LCD_A1. The transistor collectors sink approximately 10 milliampere of current through the LED's. Two series current-limiting resistors are used in the anode leg of the LED's to set up the 10 milliampere nominal value.

Transistors Q18, Q19, and associated circuitry supply power to all of the flashing LED's. Transistors Q20, Q21, and associated circuitry supply power to the 4 static LED's. LED drivers U5 and U6 enable the LED's to be turned on or off.

Brightness of the LED's is controlled by FLASH and LED_BACKLIGHT which pulse width modulates the power to the LED's. The symbol number, name and function of each of the LED's is shown in Table 4.

PHOTODETECTOR

The keypad boards employ a photodetector to measure the ambient light level. The light level provides an analog level to the processor board to be thresholded. This information is used by the controller on the processor board to automatically turn on or turn off the electroluminescent (EL) panel, and to dim the LED's in low light conditions.

EL PANEL INTERFACE

The EL panel backlight interface occurs via two holes on the keypad boards (HL1 and HL2). HL2 provides the high voltage AC drive to illuminate the electroluminescent panel. HL1 provides the AC ground for the electroluminsescent panel.

Power for the EL panel is derived from the processor board through a custom matched EL driver device for the particular EL panel used as part of the front panel.

LED NAME	SYSTEM FUNCTION	SCAN FUNCTION	FLASHING FUNCTION
SL5	Y	N	Y
AUX1	Y	N	Y
AUX2	Y	N	Y
SL6	Y	N	Y
SL3	Y	N	Y
WAIL	Y	N	Y
BUSY	Y	Y	N
XMIT	Y	Y	N
SL2	Y	N	Y
SL4	Y	N	Y
SCAN	Y	Y	N
SL1	Y	N	Y
SPKR	Y	N	Y
S	Y	Y	N
YELP	Y	N	Y
RESET	Y	N	Y

Table 4 - LED Names and Functions

POWER DISTRIBUTION

The power supplies used to power the keypad boards are A+SW and +5V.

A+SW is the switched battery power of the control unit. This power supply is switched through the action of the PWR button on the front panel of the control unit (and keypad board). The switching action occurs on the I/O board of the control unit through the power on/off circuitry found on the processor board. A+SW is used to supply power to the LED's.

The +5V is the regulated 5 volt power used to power all logic devices on the keypad boards. The +5V is also used to provide a stable reference voltage in the LCD temperature compensation circuit and the photodetector circuit.

TEST PROCEDURES

Two test procedures are available for testing the control unit. The tests are as follows:

- Keyboard Self-Test
- S-800 Automatic Tester

The keyboard self-test can be performed to check the display panel keyboard functions only. No other test equipment is required.

The complete keyboard self-test procedure is provided in the following section.

For the automatic tester procedure, a "dumb" terminal is required in addition to the Automatic Tester. This procedure uses the dumb terminal to access the MONITOR test software

KEYPAD BOARD CONNECTOR PIN J1	SIGNAL NAME	INPUT (I)/ OUTPUT (O)	DIGITAL (D)/ ANALOG (A)	LEVEL (VOLTS)
1	+5V	I	A	5
2	GND	I	A	0
3	PWR-SW	O	A	0, FLOAT
4	LIGHT-SENSOR	O	A	0 - 5
5	KEYBOARD-DATA	O	D	TTL
6	LCD-A0	I	D	TTL
7	LCD-A1	I	D	TTL
8	LCD-D0	I	D	TTL
9	LCD-D1	I	D	TTL
10	LED-EN	I	D	TTL
11	LCD-D2	I	D	TTL
12	LCD-D3	I	D	TTL
13	LCD-D4	I	D	TTL
14	LCD-D5	I	D	TTL
15	LCD-EN	I	D	TTL
16	FLASH	I	D	TTL
17	LED-BLACKLIGHT	I	D	13.8
18	A+SW	I	A	0
19	AC-GND	I	A	125

Table 5 - Display Board Interface and Levels

that is resident in the control unit to perform a complete test on the display panel. The tests include checking all keypad functions, light tests, EL panel and photodetector tests.

The section for the automatic tester that follows the keyboard self-test provides an introduction to the automatic tester procedure. This introduction lists the equipment required, test commands, and general procedures used with the automatic tester. For complete information, refer to the Automatic Tester Maintenance Manual.

KEYBOARD SELF-TEST

The self-test procedures contained in this section provide a quick check of all of the keyboard functions. The self-test includes a test of all push-button, both static and flashing LED's, all segments of the display panel, the EL panel and the photodetector. The tests should be helpful in quickly locating keyboard failures as well as an aid in troubleshooting.

Test Requirements:

1. Make sure the control unit is connected to a 13.8 Vdc supply.

2. Turn the control unit on by pressing the **PWR** push-button.

NOTE

The test mode may be terminated at any point by pressing the **FNC** and **ADD** push-button simultaneously on the front of the control unit. The software will go into a wait state and allows the watchdog timer to expire & reset the control head.

Test Procedure:

Put the control unit in the test mode by simultaneously pressing both the **FNC** and **ADD** push-button. The control unit will now exercise a series of keyboard tests in typically less than one minute. Active user interaction is necessary for some of these tests. The test procedure and order of keyboard test functions is as follows:

NOTE

To prevent accidentally leaving the control unit in test mode, a 30 second timer is restarted each time a key is pressed. If this timer ever expires, the control unit will automatically leave the test mode.

a) Control Unit software version number is displayed on the eight character LCD as follows:

REV X

where X is an alpha character (A-0)

b) This display lasts until a key is pushed or timer expires. The control unit will display "stars" in all LCD digit positions as follows:

* * * * * * * *

This display lasts until a key is pushed or timer expires.

c) The control unit will display "zeros" in all LCD digit positions as follows:

0 0 0 0 0 0 0 0

This display lasts until a key is pushed or timer expires.

d) The control unit will turn on the XMIT LED wiht the LCD showing the following:

XMIT LED

This test lasts until a key is pushed or timer expire.

e) The control unit will blink the BUSY LED with the LCD showing the following:

BUSY LED

This test lasts until a key is pushed.

f) The control unit will blink the SCAN LED with the LCD showing the following:

SCAN LED

This test lasts until a key is pushed or timer expires.

g) The control unit will blink the S LED with the LCD showing the following:

S LED

This test lasts until a key is pushed.

h) The control unit will blink the EL panel with the LCD showing the following:

EL PANEL

This test lasts until a key is pushed.

i) The control unit will display either of the following:

PHOTO L	or	PHOTO D

The display shown indicates whether the photodetector of the front panel detects either a high ambient light level (L for light) or a low ambient light level (D for dark).

This test lasts until a key is pushed.

j) The control unit will display the following:

PUSH KEY

This display will last until a key is pushed.

Each subsequent key pushed is displayed on the LCD of the front panel until a following key is pushed.

AUTOMATIC TESTER

The S-800 Automatic Tester is used in order to test the keypad board of the control unit with the two known functional remaining boards (Processor and I/O boards) of the control unit. Complete instructions for the automatic tester are contained in LBI-38166.

Connections to the S-800 Automatic Tester are provided by five cables that plug directly into the control unit (on the I/O Board), one cable for the dumb terminal interface, and one cable for the 13.8 volt nominal power supply input.

One command is executed via MONITOR software to perform the automatic testing of the keypad board. The command is:

TSTK S (or D) performs keypad related tests.

The character S or D designates whether the unit (or board) is configured for the Scan version or System version, respectively.

The keypad board test performs the following:

- Cycling of the LED
- Cycling of a character on the LCD (* or O)
- Photodetector test via * (for light) or O (for dark) on the LCD
- EL panel blinking at a rate of one complete LED cycle
- Sampling of the buttons

The S-825 Series Control Unit is mated to the automatic tester via the cables labeled J1 through J5 on the tester. The automatic tester receives input power from the 13.8 volt nominal supply source. The dumb terminal mates with the tester through an RS-232C cable.

Upon a power up, the control unit detects that the automatic tester is plugged in the unit. The control unit then performs an autobaud function where it will lock onto the proper baud rate of the terminal as determined by decoding the carriage return character from the dumb terminal. The permissible baud rates are 19.2 k, 9600, 4800, 3600, 2400, and 1200.

The dumb terminal is interfaced to the control unit (via the automatic tester) to exercise the MONITOR test software that is embedded as part of the operational code of the microcomputer on the processor board.

The basic test setup procedure used ot test the keypad board is shown in Figure 1.

The dumb terminal is set up for the serial transmission as shown in Table 6.

When powered up, the control unit displays a flashing "MONITOR" banner on the LCD. At this point, the control unit is awaiting a carriage return character from the dumb terminal. The control unit starts to look for the character at a baud rate of 19.2 k. If the carriage return is sent at a different baud rate or if another character is received, the control unit will switch to looking for the carriage return at 9600 baud. This process continues until the carriage return is received at the expected baud rate. The allowable baud rates are 19.2 k, 9600, 4800, 3600, 2400, and 1200.

Upon reception of the carriage return at the expected baud rate, the control unit transmits to the dumb terminal the standard S-825 Series Control Unit banner message.

All commands from the dumb terminal are entered after the MONITOR prompt "*". The commands are processed and cause the control unit to perform a series of operations after the reception of a carriage return character (line feed character is not required).

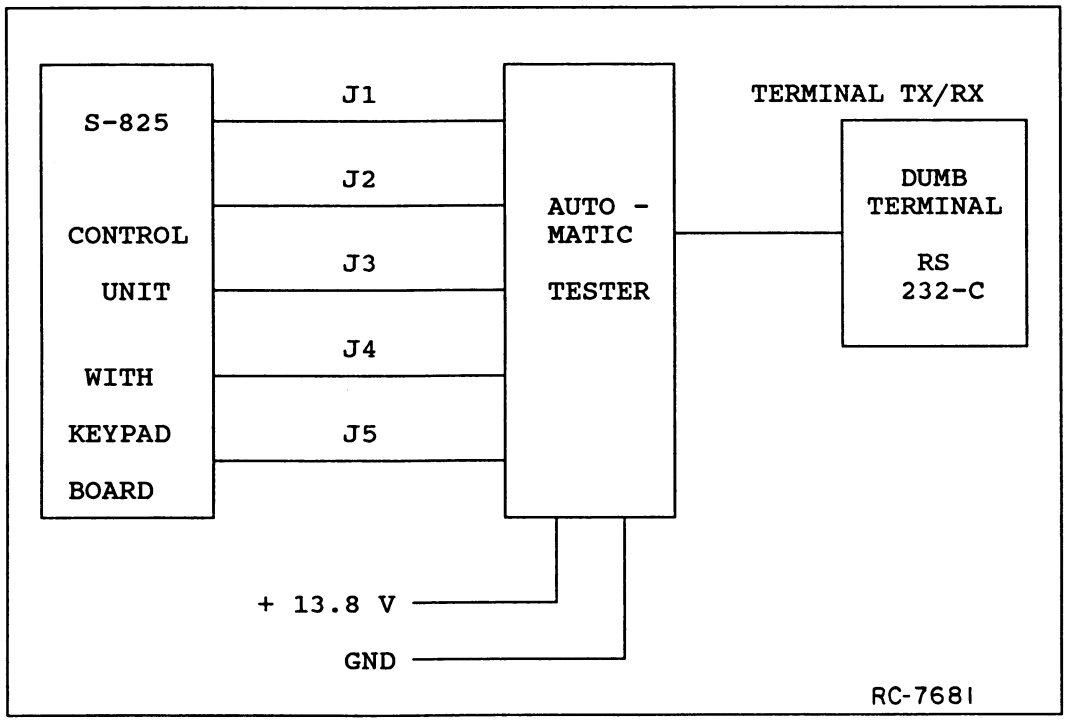

Figure 1 - Dumb Terminal To Control Unit Interface

TRANSMIT RATE	VARIABLE 1200 - 19.2 K
RECEIVE RATE	VARIABLE 1200 - 19.2 K
DATA BITS	7
PARITY	ODD
DUPLEX	FULL
CHARACTERS	ASCII, 0-9 AND A-Z, UPPERCASE
HANDSHAKING	NONE
TRANSMIT LINE	PIN 2 ON DB-25 CONNECTOR
RECEIVE LINE	PIN 3 ON DB-25 CONNECTOR
SIGNAL GROUND LINE	PIN 7 ON DB-25 CONNECTOR

Table 6 - Dumb Terminal Characteristics

SERVICE NOTE

All transmissions from the control unit to the dumb terminal are preceded by a carriage return and line feed.

A summary of the keypad board individual test commands executable from the dumb terminal through the processor board test fixture are listed in Table 7.

LED 1 = X	XMIT LED ON (X=1) OFF (X=0)
LED 2 = X	BUSY LED ON (X=1) OFF (X=0)
LED 3 = X	SCAN LED ON (X=1) OFF (X=0)
LED 4 = X	S LED ON (X=1) OFF (X=0)
LED 7 = X	WAIL LED ON (X=1) OFF (X=0)
LED 8 = X	SL1 LED ON (X=1) OFF (X=0)
LED 9 = X	SL2 LED ON (X=1) OFF (X=0)
LED 10 = X	SL3 LED ON (X=1) OFF (X=0)
LED 11 = X	SL4 LED ON (X=1) OFF (X=0)
LED 12 = X	SL5 LED ON (X=1) OFF (X=0)
LED 13 = X	SL6 LED ON (X=1) OFF (X=0)
LED 14 = X	SPKR LED ON (X=1) OFF (X=0)
LED 15 = X	AUX1 LED ON (X=1) OFF (X=0)
LED 16 = X	AUX2 LED ON (X=1) OFF (X=0)
KEY	DISPLAYS ON THE TERMINAL THE KEY PRESSED
LCD Z = Y	DISPLAYS CHARACTER Y (0-9, A-Z) AT THE LCD DIGIT POSITION Z (1-8)
LDD	DISPLAYS ON THE TERMINAL THE PHOTO DETECTOR VALUE
FLS X	BLINK (X=1) OR STOP BLINK (X=0) OF FLASHING LED'S TURNED ON PREVIOUSLY
LDB X	BLINK (X=1) OR STOP BLINK (X=0) OF STATIC LED'S TURNED ON PREVIOUSLY
ELB X	TURNS EL PANEL ON (X=1) OFF (X=0)
TSTK S(or D)	COMPLETE DEYPAD TEST

Table 7 - Keypad Board MONITOR Commands

ERICSSON

Ericsson GE Mobile Communications Inc.
Mountain View Road • Lynchburg, Virginia 24502

Printed in U.S.A

COMPONENT SIDE

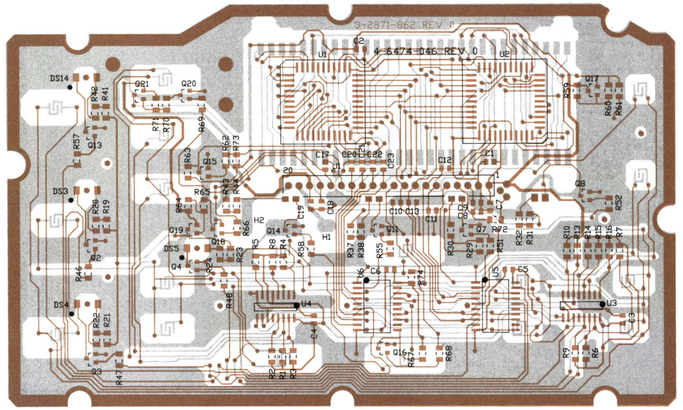

(4-6474-046, Sh. 1, Rev. 0)
(3-2871-862, Sh. 1, Rev. 0)
(3-2871-862, Sh. 2, Rev. 0)

SOLDER SIDE

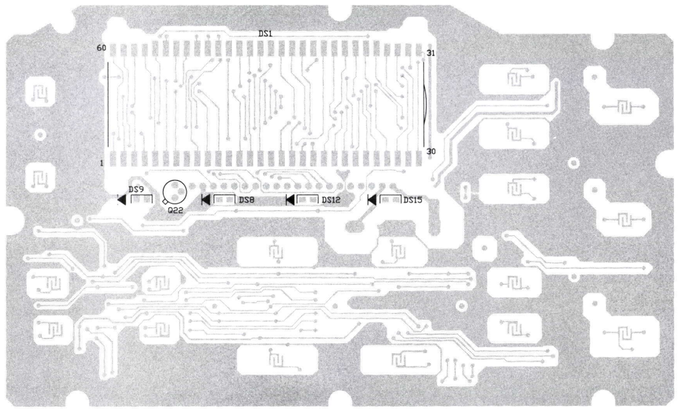

(4-6474-046, Sh. 2, Rev. 0)
(3-2871-862, Sh. 2, Rev. 0)

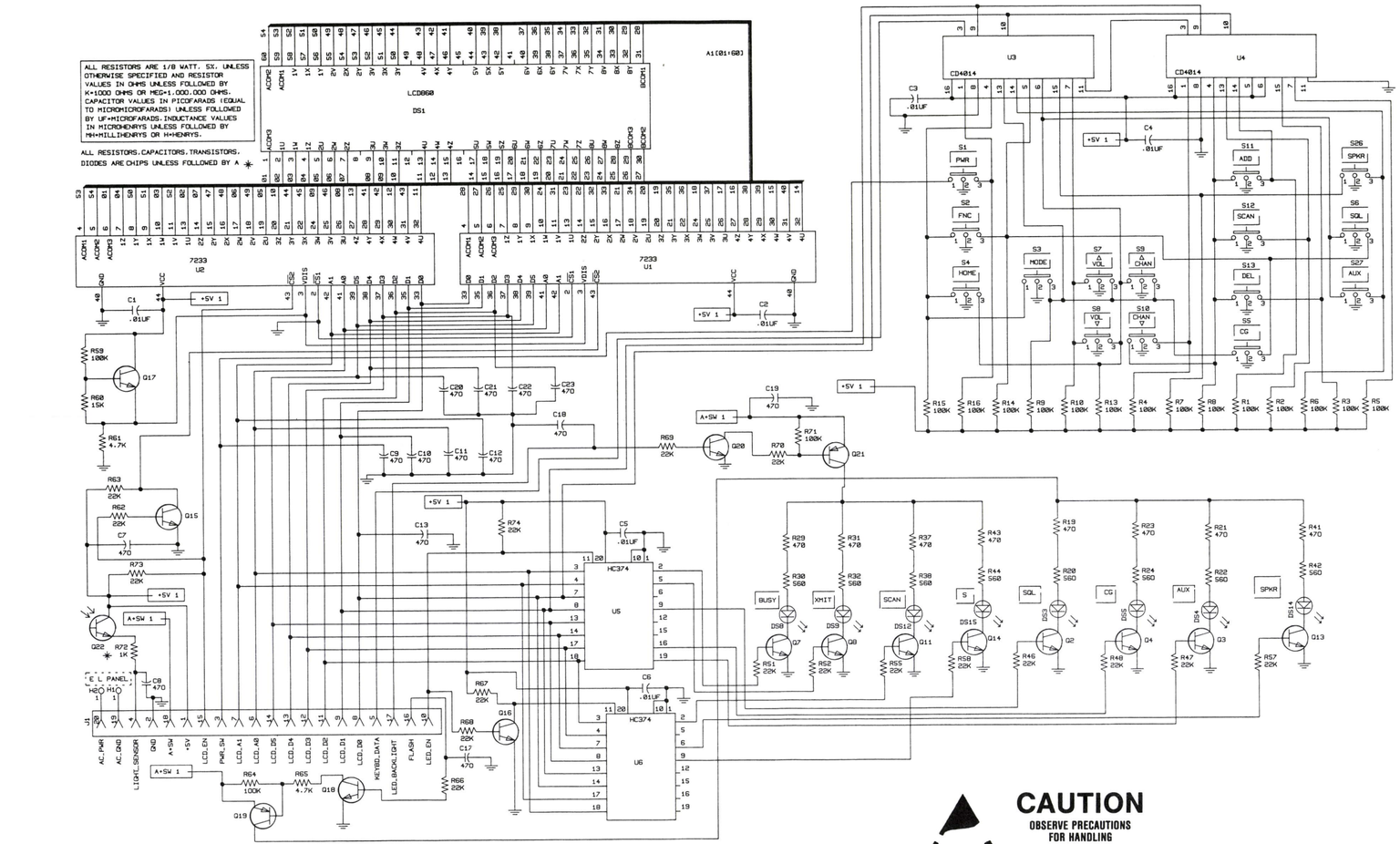

(19D902355, Rev. 0)

RUNS ON SOLDER SIDE
RUNS ON BOTH SIDES
RUNS ON COMPONENT SIDE

CAUTION
OBSERVE PRECAUTIONS FOR HANDLING
ELECTROSTATIC SENSITIVE DEVICES

SCAN DISPLAY PANEL
19D438901P1

ALL RESISTORS ARE 1/8 WATT. 5%. UNLESS OTHERWISE SPECIFIED AND RESISTOR VALUES IN OHMS UNLESS FOLLOWED BY K=1000 OHMS OR MEG=1,000,000 OHMS. CAPACITOR VALUES IN PICOFARADS (EQUAL TO MICROMICROFARADS) UNLESS FOLLOWED BY UF=MICROFARADS. INDUCTANCE VALUES IN MICROHENRYS UNLESS FOLLOWED BY MH=MILLIHENRYS OR H=HENRYS.

ALL RESISTORS, CAPACITORS, TRANSISTORS, DIODES ARE CHIPS UNLESS FOLLOWED BY A ✳

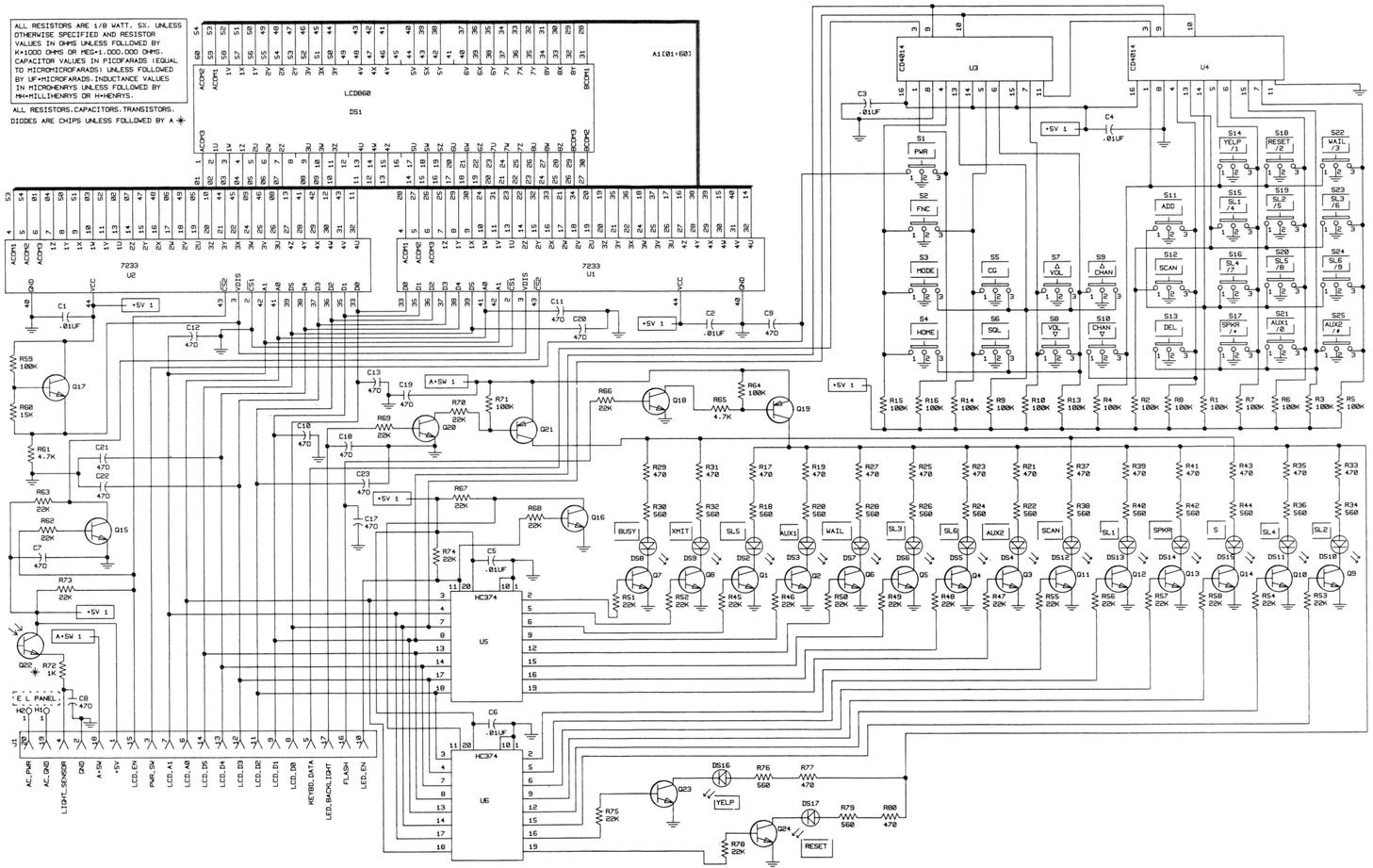

SYSTEM DISPLAY PANEL
19D438902P1

(19D902356, Rev. 0)

CAUTION
OBSERVE PRECAUTIONS FOR HANDLING
ELECTROSTATIC SENSITIVE DEVICES

RUNS ON SOLDER SIDE
RUNS ON BOTH SIDES
RUNS ON COMPONENT SIDE

COMPONENT SIDE

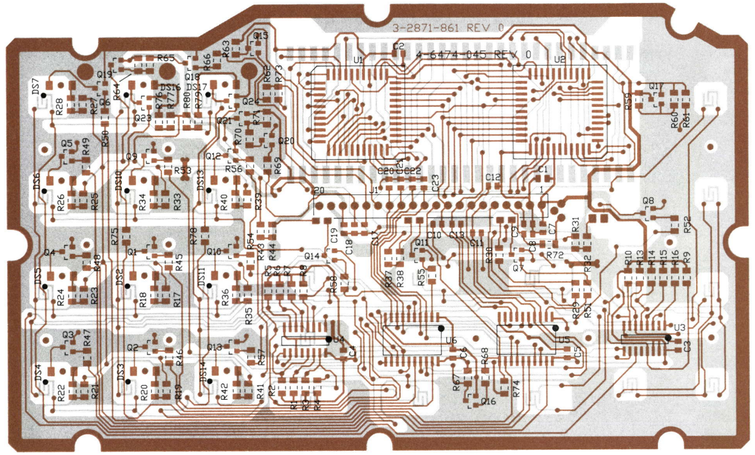

(4-6474-045, Sh. 1, Rev. 0)
(3-2871-861, Sh. 1, Rev. 0)
(3-2871-861, Sh. 2, Rev. 0)

SOLDER SIDE

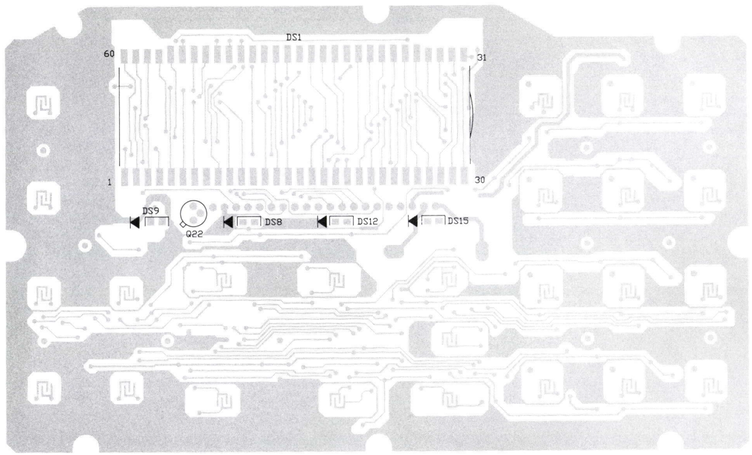

(4-6474-045, Sh. 2, Rev. 0)
(3-2871-861, Sh. 2, Rev. 0)

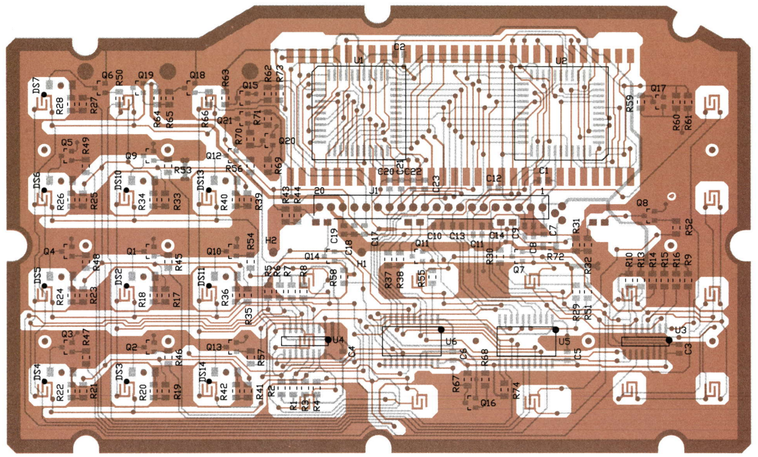

(4-6474-020, Rev. A)
(3-8771-172)

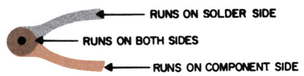

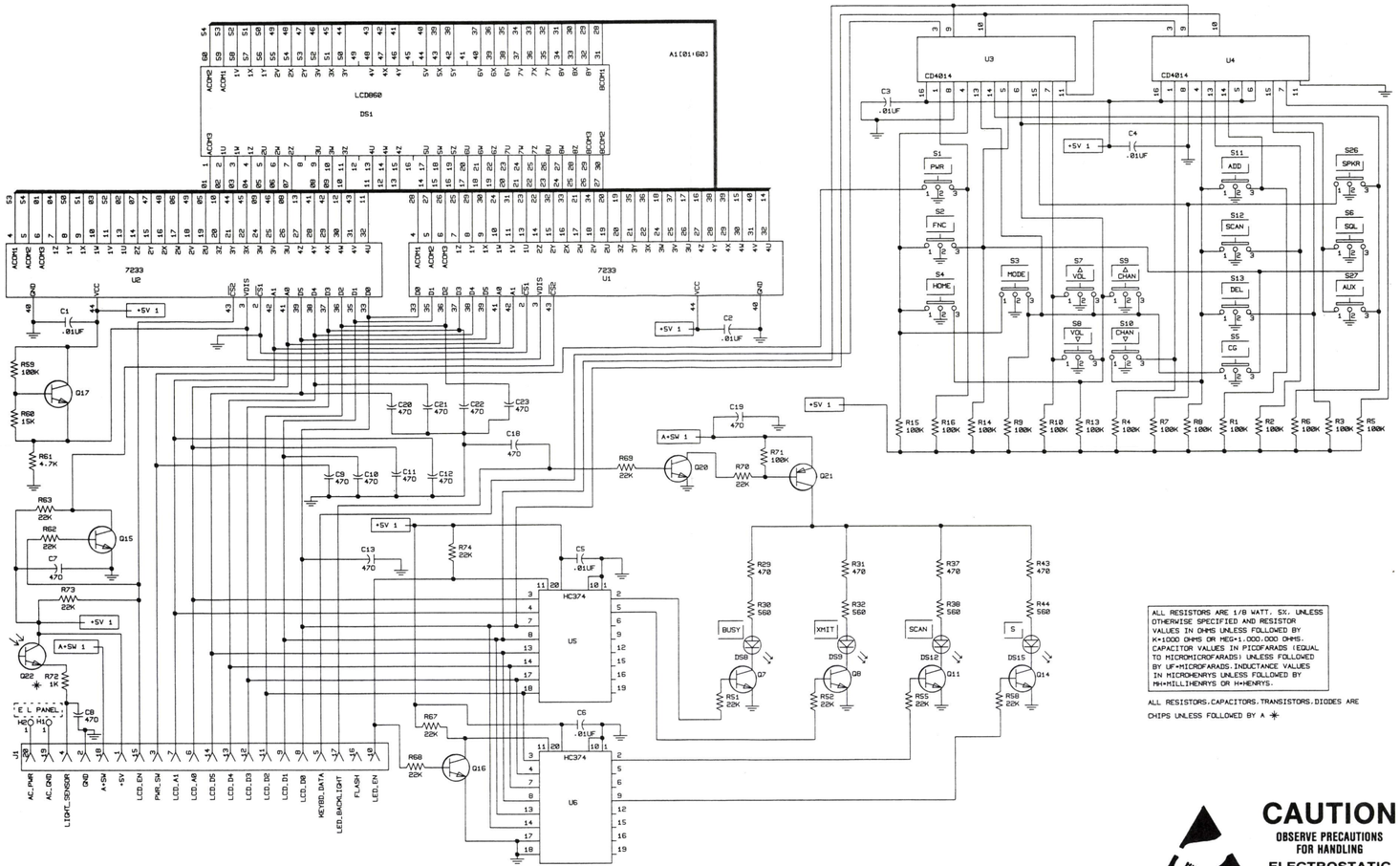

(19D438656, Sh. 1, Rev. 0)

ALL RESISTORS ARE 1/8 WATT, 5%, UNLESS OTHERWISE SPECIFIED AND RESISTOR VALUES IN OHMS UNLESS FOLLOWED BY K=1000 OHMS OR MEG=1,000,000 OHMS. CAPACITOR VALUES IN PICOFARADS (EQUAL TO MICROMICROFARADS) UNLESS FOLLOWED BY UF=MICROFARADS. INDUCTANCE VALUES IN MICROHENRYS UNLESS FOLLOWED BY MH=MILLIHENRYS OR H=HENRYS.

ALL RESISTORS,CAPACITORS,TRANSISTORS,DIODES ARE CHIPS UNLESS FOLLOWED BY A ✳

CAUTION
OBSERVE PRECAUTIONS FOR HANDLING
ELECTROSTATIC SENSITIVE DEVICES

SCAN DISPLAY PANEL
19D438651P1

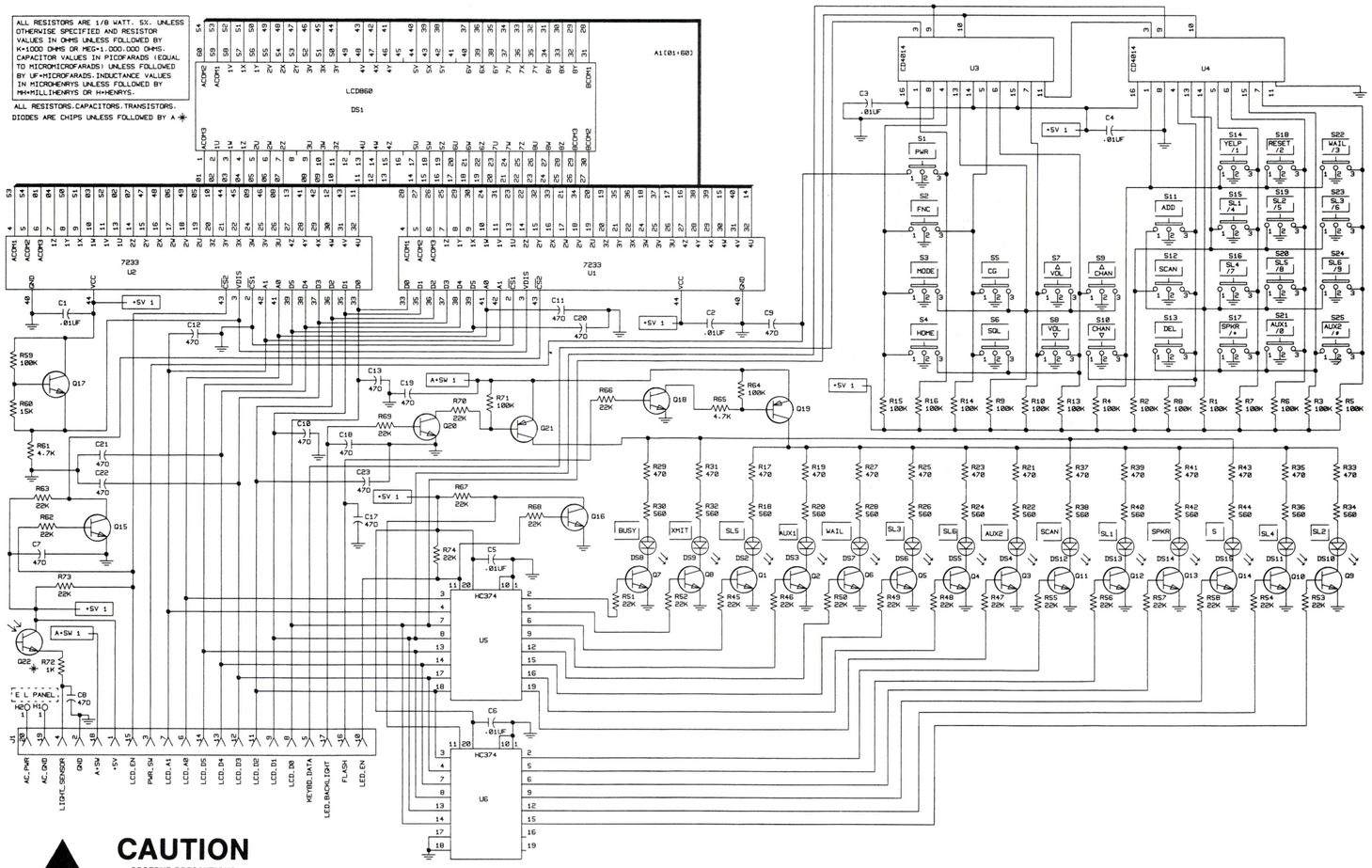

CAUTION
OBSERVE PRECAUTIONS FOR HANDLING
ELECTROSTATIC SENSITIVE DEVICES

(19D438655, Sh. 1, Rev. 0)

SYSTEM DISPLAY PANEL
19D438652P1

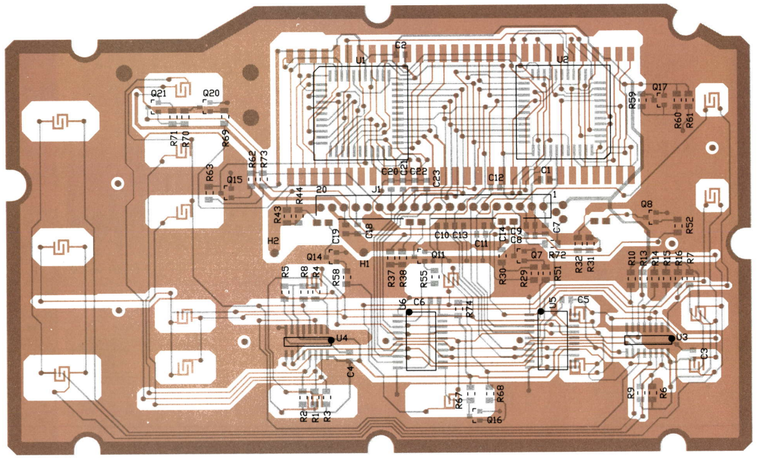

(4-6474-021, Rev. A)
(3-8771-173)

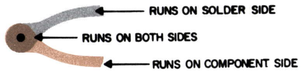

PARTS LIST

SCAN DISPLAY PANEL
19D438901P1
(4-6474-046)
ISSUE 2

SYMBOL	GE PART NO.	DESCRIPTION
		- - - - - - - - - - CAPACITORS - - - - - - - - -
C1 thru C13	2-6612-001	Monolithic, 0.01 uF, 50V.
C17 thru C23	2-6612-001	Monolithic, 0.01 uF, 50V.
		- - - - - - - - - - - DIODES - - - - - - - - - -
DS3 thru DS5	2-4141-503	LED, HLMP-6300 Red.
DS8	2-4141-820	LED, MV54123 Green.
DS9	2-4141-821	LED, MV57123 Red.
DS12	2-4141-822	LED, MV53123 Yellow.
DS14	2-4141-503	LED, HLMP-6300 Red.
DS15	2-4141-820	LED, MV54123 Green.
		- - - - - - - - - - - JACKS - - - - - - - - - -
J1	2-5447-001	20 Pin Female Connector.
		- - - - - - - - - - TRANSISTORS - - - - - - - - -
Q2 thru Q4	2-8468-904	Transistor, NPN, 3904.
Q7 and Q8	2-8468-904	Transistor, NPN, 3904.
Q11	2-8468-904	Transistor, NPN, 3904.
Q13 thru Q18	2-8468-904	Transistor, NPN, 3904.
Q19	2-8414-906	Transistor, PNP, 3906.
Q20	2-8468-904	Transistor, NPN, 3904.
Q21	2-8414-906	Transistor, PNP, 3906.
Q22	2-8621-310	Transistor, photo.
		- - - - - - - - - - - RESISTORS - - - - - - - - -
R1 thru R10	2-6120-104	Resistor, 100K ohm + or -5%, 1/4 w.
R13 thru R16	2-6120-104	Resistor, 100K ohm + or -5%, 1/4 w.
R19	2-6120-471	Resistor, 470 ohm + or -5%, 1/4 w.
R20	2-6120-561	Resistor, 560 ohm + or -5%, 1/4 w.
R21	2-6120-471	Resistor, 470 ohm + or -5%, 1/4 w.
R22	2-6120-561	Resistor, 560 ohm + or -5%, 1/4 w.
R23	2-6120-471	Resistor, 470 ohm + or -5%, 1/4 w.
R24	2-6120-561	Resistor, 560 ohm + or -5%, 1/4 w.
R29	2-6120-471	Resistor, 470 ohm + or -5%, 1/4 w.
R30	2-6120-561	Resistor, 560 ohm + or -5%, 1/4 w.
R31	2-6120-471	Resistor, 470 ohm + or -5%, 1/4 w.
R32	2-6120-561	Resistor, 560 ohm + or -5%, 1/4 w.
R37	2-6120-471	Resistor, 470 ohm + or -5%, 1/4 w.
R38	2-6120-561	Resistor, 560 ohm + or -5%, 1/4 w.
R41	2-6120-471	Resistor, 470 ohm + or -5%, 1/4 w.
R42	2-6120-561	Resistor, 560 ohm + or -5%, 1/4 w.
R43	2-6120-471	Resistor, 470 ohm + or -5%, 1/4 w.
R44	2-6120-561	Resistor, 560 ohm + or -5%, 1/4 w.
R46 thru R48	2-6120-223	Resistor, 22K ohm + or -5%, 1/4 w.
R51 and R52	2-6120-223	Resistor, 22K ohm + or -5%, 1/4 w.
R55	2-6120-223	Resistor, 22K ohm + or -5%, 1/4 w.
R57 and R58	2-6120-223	Resistor, 22K ohm + or -5%, 1/4 w.
R59	2-6120-104	Resistor, 100K ohm + or -5%, 1/4 w.
R60	2-6120-153	Resistor, 15K ohm + or -5%, 1/4 w.
R61	2-6120-472	Resistor, 4.7K ohm + or -5%, 1/4 w.
R62 and R63	2-6120-223	Resistor, 22K ohm + or -5%, 1/4 w.
R64	2-6120-104	Resistor, 100K ohm + or -5%, 1/4 w.
R65	2-6120-472	Resistor, 4.7K ohm + or -5%, 1/4 w.
R66 thru R70	2-6120-223	Resistor, 22K ohm + or -5%, 1/4 w.
R71	2-6120-104	Resistor, 100K ohm + or -5%, 1/4 w.
R72	2-6120-102	Resistor, 1K ohm + or -5%, 1/4 w.
R73 and R74	2-6120-223	Resistor, 22K ohm + or -5%, 1/4 w.
		- - - - - - - - INTEGRATED CIRCUITS - - - - - - -
U1 and U2	2-8759-001	LCD Driver 7233BFIQH.
U3 and U4	2-8759-002	Shift Register, MC14014.
U5 and U6	2-8759-003	D-Type Flip-Flop, 74HC374.
		- - - - - - - - - - MISCELLANEOUS - - - - - - - -
	2-5264-043	Spacer.

*COMPONENTS ADDED, DELETED OR CHANGED BY PRODUCTION CHANGES

PARTS LIST

SYSTEM DISPLAY PANEL
19D438902P1
(4-6474-045)
ISSUE 1

SYMBOL	GE PART NO.	DESCRIPTION
		- - - - - - - - - - CAPACITORS - - - - - - - - -
C1 thru C13	2-6612-001	Monolithic, 0.01 uF, 50V.
C17 thru C23	2-6612-001	Monolithic, 0.01 uF, 50V.
		- - - - - - - - - - - DIODES - - - - - - - - - -
DS2 thru DS7	2-4141-503	LED, HLMP-6300 Red.
DS8	2-4141-820	LED, MV54123 Green.
DS9	2-4141-821	LED, MV57123 Red.
DS10 and DS11	2-4141-503	LED, HLMP-6300 Red.
DS12	2-4141-822	LED, MV53123 Yellow.
DS13. and DS14	2-4141-503	LED, HLMP-6300 Red.
DS15	2-4141-820	LED, MV54123 Green.
DS16 and DS17	2-4141-503	LED, HLMP-6300 Red.
		- - - - - - - - - - - JACKS - - - - - - - - - -
J1	2-5447-001	20 Pin Female Connector.
		- - - - - - - - - - TRANSISTORS - - - - - - - - -
Q1 thru Q18	2-8468-904	Transistor, NPN, 3904.
Q19	2-8414-906	Transistor, PNP, 3906.
Q20	2-8468-904	Transistor, NPN, 3904.
Q21	2-8414-906	Transistor, PNP, 3906.
Q22	2-8621-310	Transistor, photo.
Q23 and Q24	2-8468-904	Transistor, NPN, 3904.
		- - - - - - - - - - RESISTORS - - - - - - - - -
R1 thru R10	2-6120-104	Resistor, 100K ohm + or -5%, 1/4 w.
R13 thru R16	2-6120-104	Resistor, 100K ohm + or -5%, 1/4 w.
R17	2-6120-471	Resistor, 470 ohm + or -5%, 1/4 w.
R18	2-6120-561	Resistor, 560 ohm + or -5%, 1/4 w.
R19	2-6120-471	Resistor, 470 ohm + or -5%, 1/4 w.
R20	2-6120-561	Resistor, 560 ohm + or -5%, 1/4 w.
R21	2-6120-471	Resistor, 470 ohm + or -5%, 1/4 w.
R22	2-6120-561	Resistor, 560 ohm + or -5%, 1/4 w.
R23	2-6120-471	Resistor, 470 ohm + or -5%, 1/4 w.
R24	2-6120-561	Resistor, 560 ohm + or -5%, 1/4 w.
R25	2-6120-471	Resistor, 470 ohm + or -5%, 1/4 w.
R26	2-6120-561	Resistor, 560 ohm + or -5%, 1/4 w.
R27	2-6120-471	Resistor, 470 ohm + or -5%, 1/4 w.
R28	2-6120-561	Resistor, 560 ohm + or -5%, 1/4 w.
R29	2-6120-471	Resistor, 470 ohm + or -5%, 1/4 w.
R30	2-6120-561	Resistor, 560 ohm + or -5%, 1/4 w.
R31	2-6120-471	Resistor, 470 ohm + or -5%, 1/4 w.
R32	2-6120-561	Resistor, 560 ohm + or -5%, 1/4 w.
R33	2-6120-471	Resistor, 470 ohm + or -5%, 1/4 w.
R34	2-6120-561	Resistor, 560 ohm + or -5%, 1/4 w.
R35	2-6120-471	Resistor, 470 ohm + or -5%, 1/4 w.
R36	2-6120-561	Resistor, 560 ohm + or -5%, 1/4 w.
R37	2-6120-471	Resistor, 470 ohm + or -5%, 1/4 w.
R38	2-6120-561	Resistor, 560 ohm + or -5%, 1/4 w.
R39	2-6120-471	Resistor, 470 ohm + or -5%, 1/4 w.
R40	2-6120-561	Resistor, 560 ohm + or -5%, 1/4 w.
R41	2-6120-471	Resistor, 470 ohm + or -5%, 1/4 w.
R42	2-6120-561	Resistor, 560 ohm + or -5%, 1/4 w.
R43	2-6120-471	Resistor, 470 ohm + or -5%, 1/4 w.
R44	2-6120-561	Resistor, 560 ohm + or -5%, 1/4 w.
R45 thru R58	2-6120-223	Resistor, 22K ohm + or -5%, 1/4 w.
R59	2-6120-104	Resistor, 100K ohm + or -5%, 1/4 w.
R60	2-6120-153	Resistor, 15K ohm + or -5%, 1/4 w.
R61	2-6120-472	Resistor, 4.7K ohm + or -5%, 1/4 w.
R62 and R63	2-6120-223	Resistor, 22K ohm + or -5%, 1/4 w.
R64	2-6120-104	Resistor, 100K ohm + or -5%, 1/4 w.
R65	2-6120-472	Resistor, 4.7K ohm + or -5%, 1/4 w.
R66 thru R70	2-6120-223	Resistor, 22K ohm + or -5%, 1/4 w.
R71	2-6120-104	Resistor, 100K ohm + or -5%, 1/4 w.
R72	2-6120-102	Resistor, 1K ohm + or -5%, 1/4 w.
R73 thru R75	2-6120-223	Resistor, 22K ohm + or -5%, 1/4 w.
R76	2-6120-561	Resistor, 560 ohm + or -5%, 1/4 w.
R77	2-6120-471	Resistor, 470 ohm + or -5%, 1/4 w.
R78	2-6120-223	Resistor, 22K ohm + or -5%, 1/4 w.
R79	2-6120-561	Resistor, 560 ohm + or -5%, 1/4 w.
R80	2-6120-471	Resistor, 470 ohm + or -5%, 1/4 w.
		- - - - - - - - INTEGRATED CIRCUITS - - - - - - -
U1 and U2	2-8759-001	LCD Driver 7233BFIQH.
U3 and U4	2-8759-002	Shift Register, MC14014.
U5 and U6	2-8759-003	D-Type Flip-Flop, 74HC374.
		- - - - - - - - - MISCELLANEOUS - - - - - - - - -
	2-5264-043	Spacer.

*COMPONENTS ADDED, DELETED OR CHANGED BY PRODUCTION CHANGES

PARTS LIST

LBI-38333A
SCAN DISPLAY PANEL
19D438651P1
(4-6474-020)

SYMBOL	GE PART NO.	DESCRIPTION
		- - - - - - - - - - CAPACITORS - - - - - - - - -
C1 thru C13	19A702052P14	Ceramic: .01 uF, 50 VDCW.
C18 thru C23	19A702052P14	Ceramic: .01 uF, 50 VDCW.
		- - - - - - - - - - CONNECTORS - - - - - - - - -
J1		Connector, 20 pin, female. ** Part No. 2-5447-001
		- - - - - - - - - - DIODES - - - - - - - - - -
DS8		LED, MV54123 Green. ** Part No. 2-4141-820
DS9		LED, MV57123 Red. ** Part No. 2-4141-821
DS12		LED, MV53123 Yellow. ** Part No. 2-4141-822
DS15		LED, MV54123 Green. ** Part No. 2-4141-820
		- - - - - - - - - - RESISTORS - - - - - - - - - -
R1 thru R10	19B800607P104	Metal film: 100K ohms, ±5%, 1/4 w.
R13 thru R16	19B800607P104	Metal film: 100K ohms, ±5%, 1/4 w.
R29	19B800607P471	Metal film: 470 ohms, ±5%, 1/4 w.
R30	19B800607P561	Metal film: 560 ohms, ±5%, 1/4 w.
R31	19B800607P471	Metal film: 470 ohms, ±5%, 1/4 w.
R32	19B800607P561	Metal film: 560 ohms, ±5%, 1/4 w.
R37	19B800607P471	Metal film: 470 ohms, ±5%, 1/4 w.
R38	19B800607P561	Metal film: 560 ohms, ±5%, 1/4 w.
R43	19B800607P471	Metal film: 470 ohms, ±5%, 1/4 w.
R44	19B800607P561	Metal film: 560 ohms, ±5%, 1/4 w.
R51 and R52	19B800607P223	Metal film: 22K ohms, ±5%, 1/4 w.
R55	19B800607P223	Metal film: 22K ohms, ±5%, 1/4 w.
R58	19B800607P223	Metal film: 22K ohms, ±5%, 1/4 w.
R59	19B800607P104	Metal film: 100K ohms, ±5%, 1/4 w.
R61	19B800607P472	Metal film: 4.7K ohms, ±5%, 1/4 w.
R62 and R63	19B800607P223	Metal film: 22K ohms, ±5%, 1/4 w.
R67	19B800607P223	Metal film: 22K ohms, ±5%, 1/4 w.
R68	19B800607P153	Metal film: 15K ohms, ±5%, 1/4 w.
R69 and R70	19B800607P223	Metal film: 22K ohms, ±5%, 1/4 w.
R71	19B800607P104	Metal film: 100K ohms, ±5%, 1/4 w.
R72	19B800607P102	Metal film: 1K ohms, ±5%, 1/4 w.
R73	19B800607P223	Metal film: 22K ohms, ±5%, 1/4 w.
R74	19B800607P223	Metal film: 22K ohms, ±5%, 1/4 w.
		- - - - - - - - - TRANSISTORS - - - - - - - - -
Q7 and Q8	19A700076P2	Transistor, NPN, 3904.
Q11	19A700076P2	Transistor, NPN, 3904.
Q14 thru Q17	19A700076P2	Transistor, NPN, 3904.
Q20	19A700076P2	Transistor, NPN, 3904.
Q21	19A700059P2	Transistor, PNP, 3906.
Q22	19A149445P1	Transistor, Photo.
		- - - - - - - INTEGRATED CIRCUITS - - - - - - - -
U1 and U2	19A149440P1	LCD DRIVER, 7233BFIQH.
U3 and U4	19A149418P1	IC, MC14014, Shift Regulator.
U5 and U6	19A704380P112	IC, 74HC374 D-Type F.F.

** Vendor Part Number:

Oak Switch Systems Inc
Crystal Lake, Illinois 60014

*COMPONENTS ADDED, DELETED OR CHANGED BY PRODUCTION CHANGES

PARTS LIST

LBI-38332A
SYSTEM DISPLAY PANEL
(4-6474-021)

SYMBOL	GE PART NO.	DESCRIPTION
		- - - - - - - - - - CAPACITORS - - - - - - - - -
C1 thru C13	19A702052P14	Ceramic: .01 uF, 50 VDCW.
C17 thru C23	19A702052P14	Ceramic: .01 uF, 50 VDCW.
		- - - - - - - - - - CONNECTORS - - - - - - - - -
J1		Connector, 20 pin, female. ** Part No. 2-5447-001
		- - - - - - - - - - DIODES - - - - - - - - - -
DS2 thru DS7		LED, HLMP-6300, Red. ** Part No. 2-4141-503
DS8		LED, MV54123 Green. ** Part No. 2-4141-820
DS9		LED, MV57123 Red. ** Part No. 2-4141-821
DS10 and DS11		LED, HLMP-6300, Red. ** Part No. 2-4141-503
DS12		LED, MV53123 Yellow. ** Part No. 2-4141-822
DS13 and DS14		LED, HLMP-6300, Red. ** Part No. 2-4141-503
DS15		LED, MV54123 Green. ** Part No. 2-4141-820
		- - - - - - - - - - RESISTORS - - - - - - - - - -
R1 thru R10	19B800607P104	Metal film: 100K ohms, ±5%, 1/4 w.
R13 thru R16	19B800607P104	Metal film: 100K ohms, ±5%, 1/4 w.
R17	19B800607P471	Metal film: 470 ohms, ±5%, 1/4 w.
R18	19B800607P561	Metal film: 560 ohms, ±5%, 1/4 w.
R19	19B800607P471	Metal film: 470 ohms, ±5%, 1/4 w.
R20	19B800607P561	Metal film: 560 ohms, ±5%, 1/4 w.
R21	19B800607P471	Metal film: 470 ohms, ±5%, 1/4 w.
R22	19B800607P561	Metal film: 560 ohms, ±5%, 1/4 w.
R23	19B800607P471	Metal film: 470 ohms, ±5%, 1/4 w.
R24	19B800607P561	Metal film: 560 ohms, ±5%, 1/4 w.
R25	19B800607P471	Metal film: 470 ohms, ±5%, 1/4 w.
R26	19B800607P561	Metal film: 560 ohms, ±5%, 1/4 w.
R27	19B800607P471	Metal film: 470 ohms, ±5%, 1/4 w.
R28	19B800607P561	Metal film: 560 ohms, ±5%, 1/4 w.
R29	19B800607P471	Metal film: 470 ohms, ±5%, 1/4 w.
R30	19B800607P561	Metal film: 560 ohms, ±5%, 1/4 w.
R31	19B800607P471	Metal film: 470 ohms, ±5%, 1/4 w.
R32	19B800607P561	Metal film: 560 ohms, ±5%, 1/4 w.
R33	19B800607P471	Metal film: 470 ohms, ±5%, 1/4 w.
R34	19B800607P561	Metal film: 560 ohms, ±5%, 1/4 w.
R35	19B800607P471	Metal film: 470 ohms, ±5%, 1/4 w.
R36	19B800607P561	Metal film: 560 ohms, ±5%, 1/4 w.
R37	19B800607P471	Metal film: 470 ohms, ±5%, 1/4 w.
R38	19B800607P561	Metal film: 560 ohms, ±5%, 1/4 w.
R39	19B800607P471	Metal film: 470 ohms, ±5%, 1/4 w.
R40	19B800607P561	Metal film: 560 ohms, ±5%, 1/4 w.
R41	19B800607P471	Metal film: 470 ohms, ±5%, 1/4 w.
R42	19B800607P561	Metal film: 560 ohms, ±5%, 1/4 w.
R43	19B800607P471	Metal film: 470 ohms, ±5%, 1/4 w.
R44	19B800607P561	Metal film: 560 ohms, ±5%, 1/4 w.
R45 thru R58	19B800607P223	Metal film: 22K ohms, ±5%, 1/4 w.
R59	19B800607P104	Metal film: 100K ohms, ±5%, 1/4 w.
R60	19B800607P153	Metal film: 15K ohms, ±5%, 1/4 w.
R61	19B800607P472	Metal film: 4.7K ohms, ±5%, 1/4 w.
R62 and R63	19B800607P223	Metal film: 22K ohms, ±5%, 1/4 w.
R64	19B800607P104	Metal film: 100K ohms, ±5%, 1/4 w.
R65	19B800607P472	Metal film: 4.7K ohms, ±5%, 1/4 w.
R66 thru R70	19B800607P223	Metal film: 22K ohms, ±5%, 1/4 w.
R71	19B800607P104	Metal film: 100K ohms, ±5%, 1/4 w.
R72	19B800607P102	Metal film: 1K ohms, ±5%, 1/4 w.
R73 and R74	19B800607P223	Metal film: 22K ohms, ±5%, 1/4 w.
	19B800607P223	Metal film: 22K ohms, ±5%, 1/4 w.
		- - - - - - - - - TRANSISTORS - - - - - - - - -
Q1 thru Q18	19A700076P2	Transistor, NPN, 3904.
Q19	19A700059P2	Transistor, PNP, 3906.
Q20	19A700076P2	Transistor, NPN, 3904.
Q21	19A700059P2	Transistor, PNP, 3906.
Q22	19A149445P1	Transistor, Photo.
		- - - - - - - INTEGRATED CIRCUITS - - - - - - - -
U1 and U2	19A149440P1	LCD DRIVER, 7233BFIQH.
U3 and U4	19A149418P1	IC, MC14014, Shift Regulator.
U5 and U6	19A704380P112	IC, 74HC374 D-Type F.F.

** Vendor Part Number:

Oak Switch Systems Inc.
Crystal Lake, Illinois 60014

*COMPONENTS ADDED, DELETED OR CHANGED BY PRODUCTION CHANGES

S-825 SERIES SCAN
DISPLAY PANEL
19D438901P1
CONSISTS OF:

VIEW AT A-A

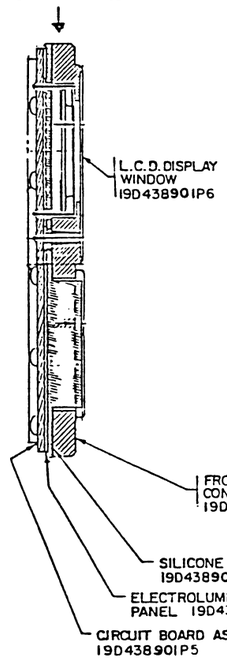

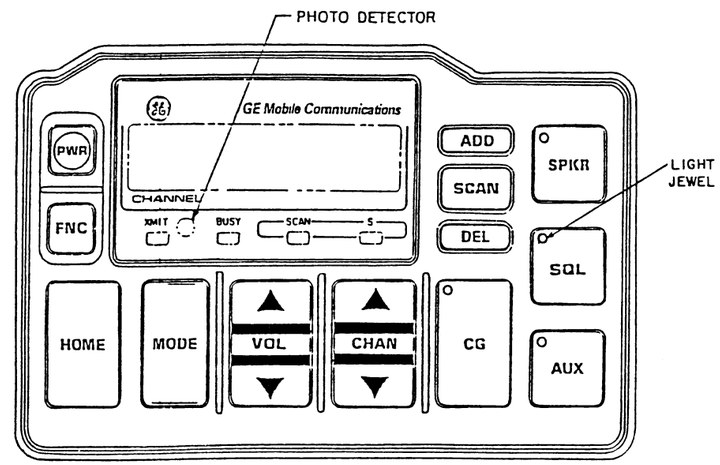

SIDE VIEW

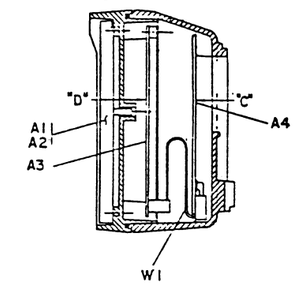

SECTION A-A

REAR VIEW

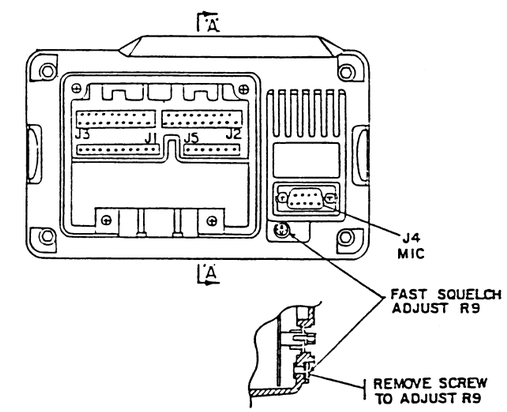

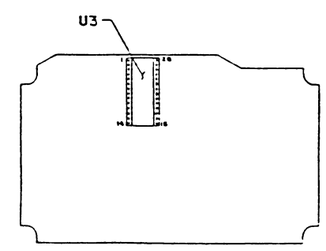

MICROPROCESSOR BOARD
VIEW AT "D"

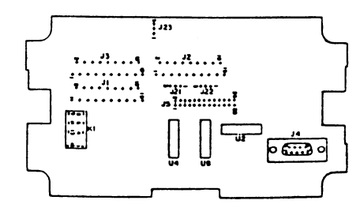

I/O BOARD
VIEW AT "C"

RC-7623A

SCAN DISPLAY PANEL
19D438901P1

S-825 SERIES
SYSTEM DISPLAY PANEL
19D438902P1
CONSISTS OF:

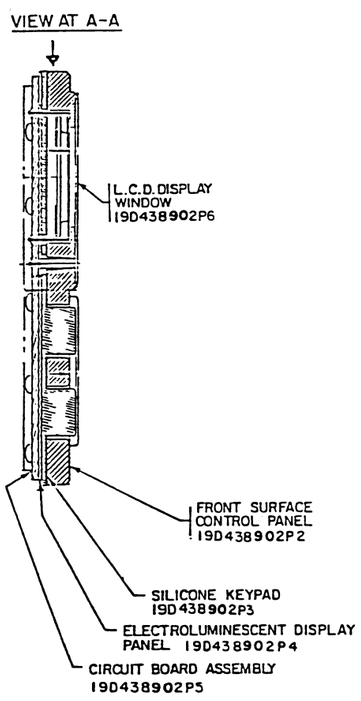

FRONT VIEW

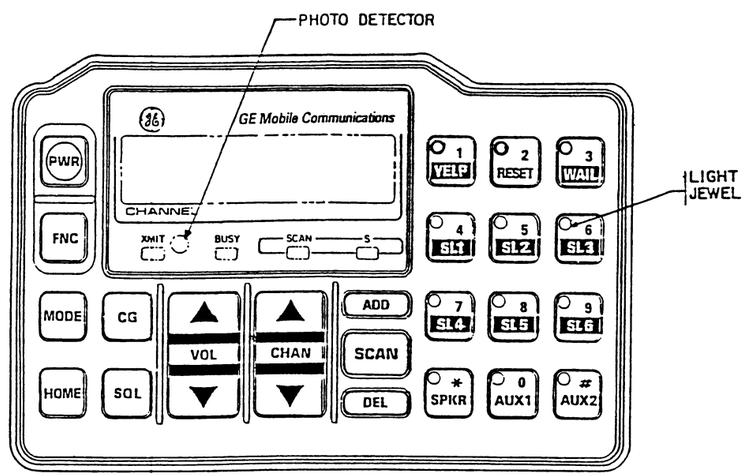

SIDE VIEW

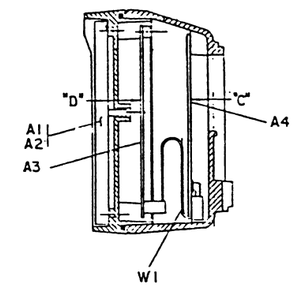

SECTION A-A

REAR VIEW

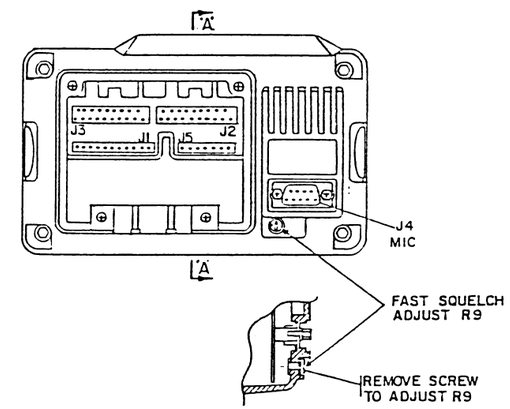

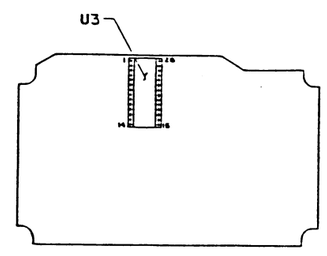

MICROPROCESSOR BOARD
VIEW AT "D"

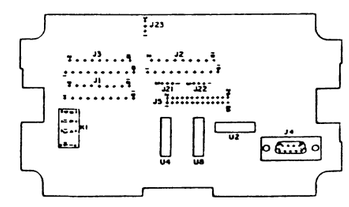

I/O BOARD
VIEW AT "C"

RC-7624A

SYSTEM DISPLAY PANEL
19D438902P1

S-825 DISPLAY PANEL 19D438651P1
CONSIST OF:
- FRONT PANEL 19D438651P2
- KEYPAD 19D438651P3
- ELECTROLUMINESCENT PANEL 19D438651P4
- PRINTED CIRCUIT BOARD 19D438651P5
- L.C.D. DISPLAY WINDOW 19D438651P6

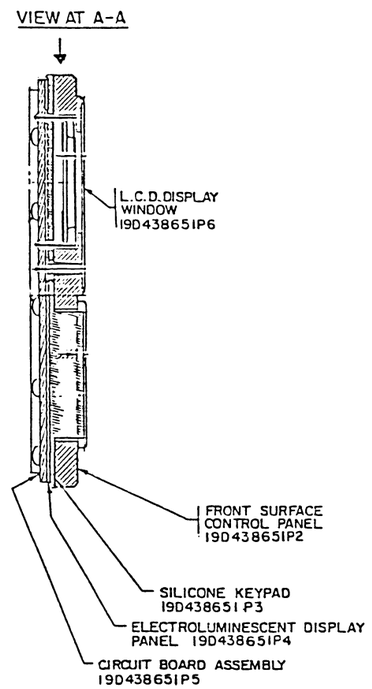

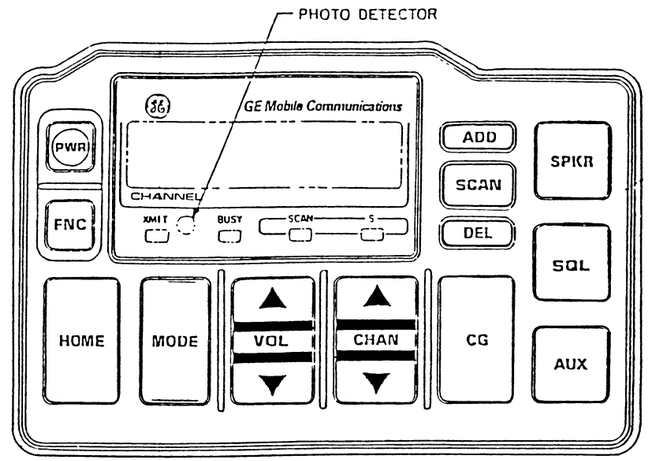

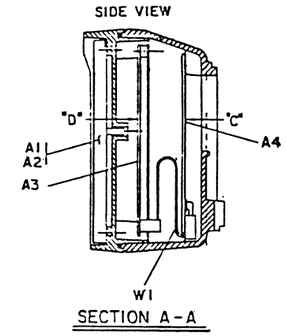

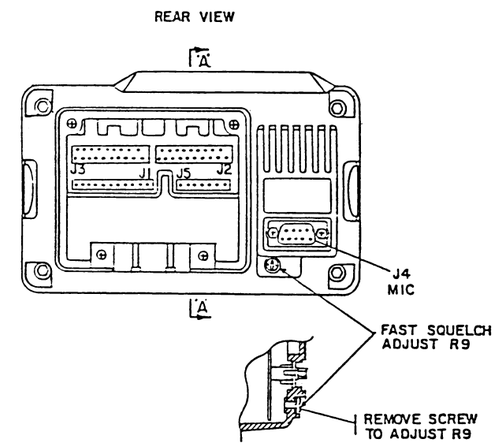

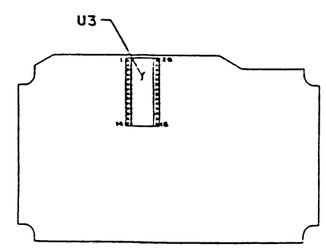

MICROPROCESSOR BOARD
VIEW AT "D"

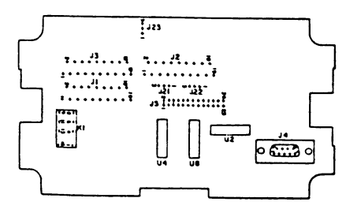

I/O BOARD
VIEW AT "C"

RC-7217C

SCAN DISPLAY PANEL
19D438651P1

S-825 DISPLAY PANEL 19D438652P1
CONSISTS OF:
FRONT PANEL 19D438652P2
KEYPAD 19D438652P3
ELECTROLUMINESCENT PANEL 19D438652P4
PRINTED CIRCUIT BOARD 19D438652P5
L.C.D. DISPLAY WINDOW 19D438652P6

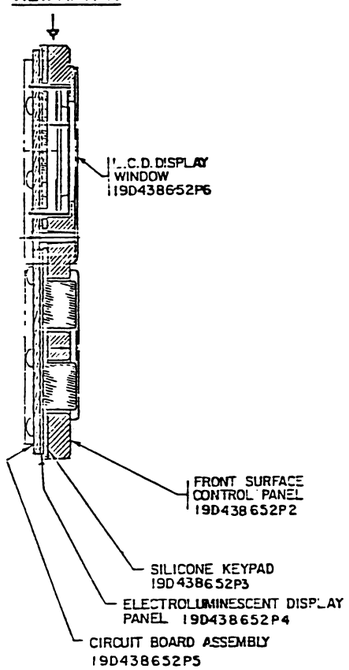

FRONT VIEW

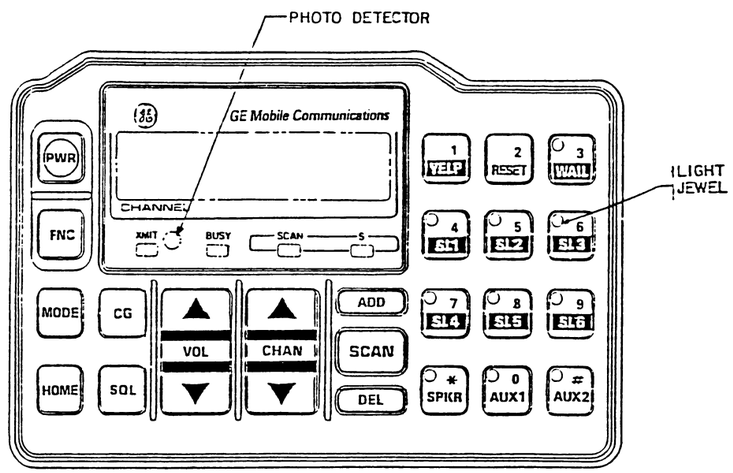

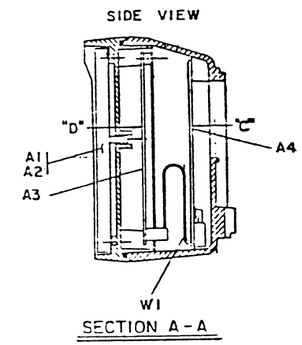

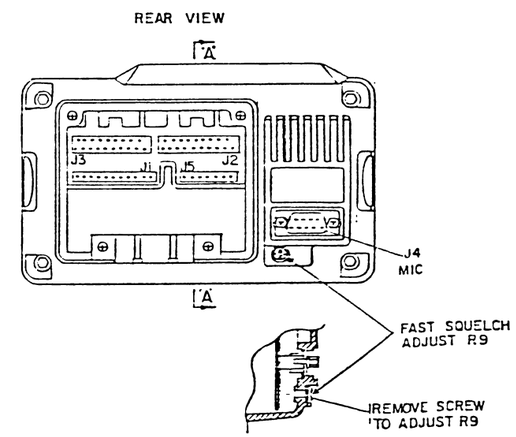

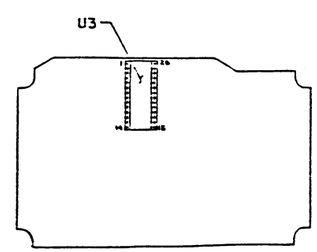

MICROPROCESSOR BOARD
VIEW AT "D"

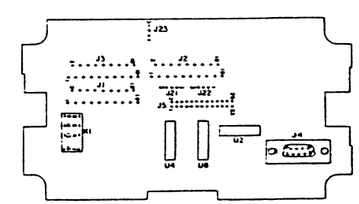

I/O BOARD
VIEW AT "C"

RC-7218B

SYSTEM DISPLAY PANEL
19D438652P1