Unity Gain Coaxial Antennas

PD83 — General Service

The PD83 is intended for use in fixed base station applications and is constructed of corrosion resistant materials to give long, trouble free service. The antenna is supplied standard with a 6061-T6 aluminum whip. A spring tempered 17-7PH stainless steel whip is available. *Specify PD83A.*

- **Coax design** — Provides broad vertical beam and good close in coverage.
- **Two piece construction** — Whip field replaceable.
- **6061-T6 Aluminum elements** — Welded solid rods for high strength, low weight and corrosion resistance.
- **Stainless steel whip option** — For the more hostile atmospheric environments.

WHEN ORDERING:
Provide frequency or frequency band. Check catalog to comply with bandwidth constraints.

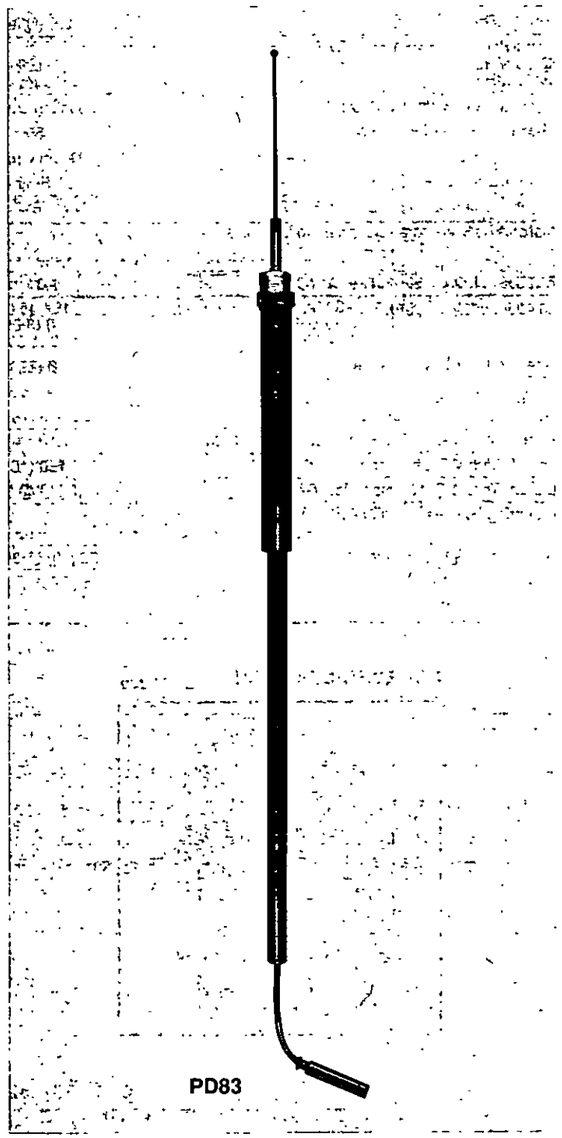

PD83

Unity Gain Coaxial Antennas

Ordering Information*

Item Number Standard	Item Number SS Whip	Frequency Range - MHz
PD83-1	PD83A-1	25-29.75
PD83-2	PD83A-2	30-39.75
PD83-3	PD83A-3	40-50
PD83-4	PD83A-4	70-76
PD83-5	PD83A-5	144-175

*Specify exact frequency for bands not given.

ELECTRICAL SPECIFICATIONS	PD83
Frequency Range - MHz	25-175
Gain - dBd	Unity
Bandwidth - MHz for 1.5:1 VSWR	0.5 @ 25 MHz
Vertical Beamwidth 1/2 Power Points	75°
Maximum Power Input - Watts	500
Lightning Protection	Star Gap
Termination - Direct Flexible Cable with N-male Connector Attached	18 in. (457 mm) RG8A/U Flexible

Note: All VSWR data referenced to 50 Ohms.

VERTICAL PATTERN ☐ PD83

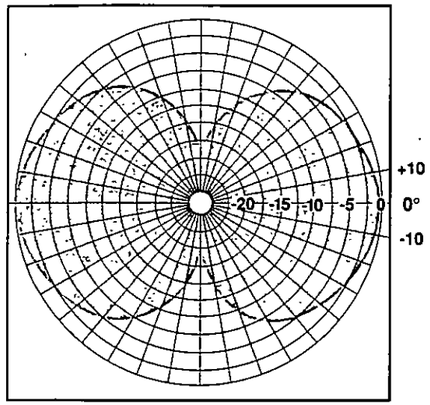

MECHANICAL SPECIFICATIONS	PD83
Overall Length - ft. (m) @ 30 MHz @ 150 MHz	18.5 (5.64) 5.8 (1.77)
Skirt Diameter - in. (mm)	2 (51)
Support Pipe Diameter - in. (mm)	1-5/16 (33)
Support Pipe Mounting Length - in. (mm)	24 (610)
Weight - lbs. (kg) @ 30 MHz @ 150 MHz	17 (7.7) 12 (5.4)
Whip Material	6061-T6 Aluminum
Skirt Material	Copper
Support Pipe Material	6061-T6 Aluminum
Wind Loading Area Flat Plate Equivalent - ft.² (m²) @ 30 MHz @ 150 MHz	1.0 (.093) .525 (.049)
Rated Wind Velocity - mph (km/hr) @ 30 MHz @ 150 MHz	100 (161) 125 (201)
Lateral Thrust @ 100 mph - lbs. (kg) @ 30 MHz @ 150 MHz	40 (18.2) 21 (9.5)
Bending Moment 6 in. (152 mm) Below Skirt @ 100 mph - ft./lbs. (m/kg) @ 30 MHz @ 150 MHz	225 (31.2) 15 (2.08)
Mounting Hardware - Supplied	PD46 Clamp Set
Mounting Hardware - Optional PD246 Pole Mount PD502 Side Mount (Short) PD504 Side Mount (Long)	PD241 Wall Mount
Shipping Weight - lbs. (kg)**	18-32 (8.2-15)
Shipping Volume - ft.³ (m³)	0.7-1.8 (.02-.05)
Shipping Mode** 150-174 MHz - UPS	25-149 MHz - Common Carrier

**Depending on frequency.

Unity Gain Coaxial Antennas

PD83 **General Service**

The PD83 is intended for use in fixed base station applications and is constructed of corrosion resistant materials to give long, trouble free service. The antenna is supplied standard with a 6061-T6 aluminum whip. A spring tempered 17-7PH stainless steel whip is available. *Specify PD83A.*

• **Coax design**	Provides broad vertical beam and good close in coverage.
• **Two piece construction**	Whip field replaceable.
• **6061-T6 Aluminum elements**	Welded solid rods for high strength, low weight and corrosion resistance.
• **Stainless steel whip option**	For the more hostile atmospheric environments.

WHEN ORDERING:
Provide frequency or frequency band. Check catalog to comply with bandwidth constraints.

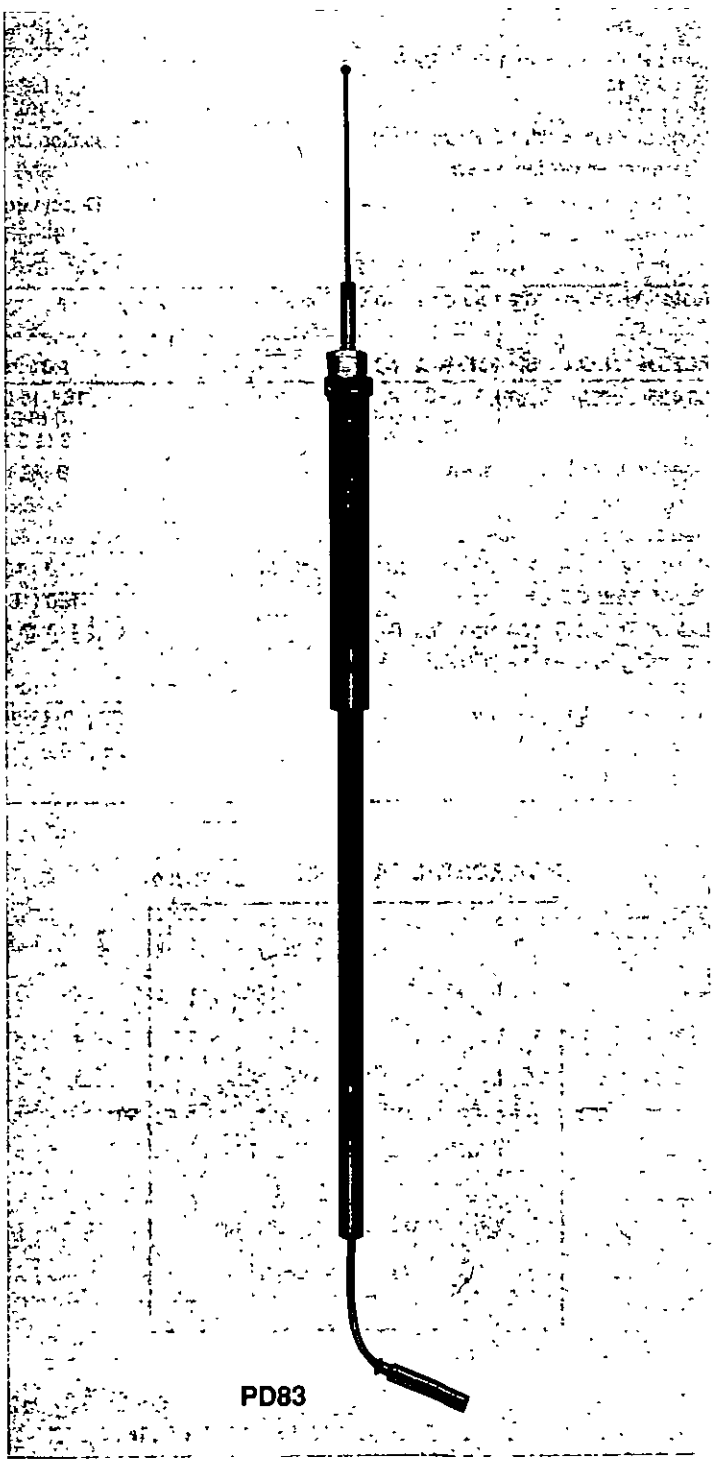

PD83

CELWAVE®
DIVISION OF RADIO FREQUENCY SYSTEMS INC.

2 Ryan Road, Marlboro, NJ 07746-1899 • **1(800) CELWAVE** • (908)462-1880

Unity Gain Coaxial Antennas

COAXIAL

Ordering Information*

Item Number Standard	Item Number SS Whip	Frequency Range - MHz
PD83-1	PD83A-1	25-29.75
PD83-2	PD83A-2	30-39.75
PD83-3	PD83A-3	40-50
PD83-4	PD83A-4	70-76
PD83-5	PD83A-5	144-175

***Specify exact frequency for bands not given.**

VERTICAL PATTERN PD83

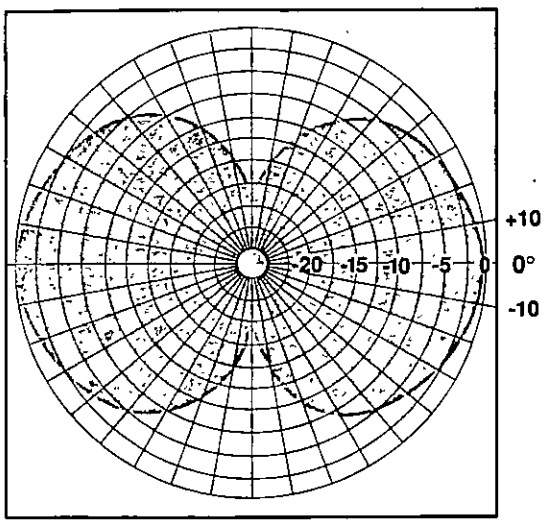

ELECTRICAL SPECIFICATIONS	PD83
Frequency Range - MHz	25-175
Gain - dBd	Unity
Bandwidth - MHz for 1.5:1 VSWR	0.5 @ 25 MHz
Vertical Beamwidth 1/2 Power Points	75°
Maximum Power Input - Watts	500
Lightning Protection	Star Gap
Termination - Direct Flexible Cable with N-male Connector Attached	18 in. (457 mm) RG8A/U Flexible

Note: All VSWR data referenced to 50 Ohms.

MECHANICAL SPECIFICATIONS	PD83
Overall Length - ft. (m)	
@ 30 MHz	18.5 (5.64)
@ 150 MHz	5.8 (1.77)
Skirt Diameter - in. (mm)	2 (51)
Support Pipe Diameter - in. (mm)	1-5/16 (33)
Support Pipe Mounting Length - in. (mm)	24 (610)
Weight - lbs. (kg)	
@ 30 MHz	17 (7.7)
@ 150 MHz	12 (5.4)
Whip Material	6061-T6 Aluminum
Skirt Material	Copper
Support Pipe Material	6061-T6 Aluminum
Wind Loading Area Flat Plate Equivalent - ft.² (m²)	
@ 30 MHz	1.0 (.093)
@ 150 MHz	.525 (.049)
Rated Wind Velocity - mph (km/hr)	
@ 30 MHz	100 (161)
@ 150 MHz	125 (201)
Lateral Thrust @ 100 mph - lbs. (kg)	
@ 30 MHz	40 (18.2)
@ 150 MHz	21 (9.5)
Bending Moment 6 in. (152 mm) Below Skirt @ 100 mph - ft./lbs. (m/kg)	
@ 30 MHz	225 (31.2)
@ 150 MHz	15 (2.08)
Mounting Hardware - Supplied	PD46 Clamp Set
Mounting Hardware - Optional PD246 Pole Mount PD502 Side Mount (Short) PD504 Side Mount (Long)	PD241 Wall Mount
Shipping Weight - lbs. (kg)**	18-32 (8.2-15)
Shipping Volume - ft.³ (m³)	0.7-1.8 (.02-.05)
Shipping Mode** 150-174 MHz - UPS	25-149 MHz - Common Carrier

**Depending on frequency.

CELWAVE®
DIVISION OF RADIO FREQUENCY SYSTEMS INC.

2 Ryan Road, Marlboro, NJ 07746-1899 • **1(800) CELWAVE** • (908)462-1880

INSTRUCTIONS FOR CAT. NO. 83-509 BASE STATION COAXIAL UNITY-GAIN ANTENNA

Cat. No. 83-509 Antenna is a high quality product designed and constructed to give satisfactory service for many years when properly installed. A complete line of Antenna System Installation Hardware for use with this as well as our many other types of antennas is illustrated on the attached sheet.

Before starting installation of antenna, inspect it carefully for any possible shipping damage, for screws which may have vibrated loose in shipment and for foreign material in input connector. Tighten any loose screws and clean connector, if necessary.

Assemble antenna by inserting whip into socket until it bottoms. Securely tighten whip socket screws. The antenna is now ready to be hoisted into position.

The antenna support pipe is the only member to which rigging gear should be attached. It has greater strength than other members of the antenna and supports the entire assembly.

To lift the antenna, a rope "hitch" should be made around the support pipe just below the skirt. Another "hitch" made near the top of the skirt itself will keep the antenna vertical while raising it into location. DO NOT USE THE WHIP OR THE FLEXIBLE TERMINAL EXTENSION TO LIFT THE ANTENNA.

Hoist antenna to top of support structure and secure in place using proper mounting hardware. Install the feed cable on the supporting structure, placing the cable connector approximately 12" below the lower end of the antenna support pipe. Secure cable to the support structure.

Attach the antenna input connector to the cable connector. The 18" RG-8A/U flexible terminal extension provided on the antenna is supplied with a weatherproof connector housing made of neoprene. Slide the neoprene connector housing over the connector as far as it will go. This housing slides freely along the flexible terminal extension as the latter has been lubricated with silicone grease. When the antenna installation is completed the neoprene housing should be in a vertical position in order to give the connectors maximum protection against the weather.

Route the cable as desired from the supporting structure to the base station transmitter housing and attach cable connector to transmitter.

phelps dodge Communications Company Route 79, Marlboro, New Jersey 07746 • (201) 462-1880

Printed in U.S.A.
12-15-71

A-21751

FIELD ASSEMBLY INSTRUCTION FOR PD83 BASE STATION COAXIAL UNITY-GAIN ANTENNA

Before starting installation of antenna, inspect it carefully for any possible shipping damage, for screws which may have vibrated loose in shipment and for foreign material in input connector. Tighten any loose screws and clean connector, if necessary.

Assemble antenna by inserting whip into socket until it bottoms. Securely tighten whip socket screws. The antenna is now ready to be hoisted into position.

The antenna support pipe is the only member to which rigging gear should be attached. It has greater strength than other members of the antenna and support the entire assembly. Attach the PD46 clamps to this area.

To lift the antenna, a rope "hitch" should be made around the support pipe just below the skirt. Another "hitch" made near the top of the skirt itself will keep the antenna vertical while raising it into location. DO NOT USE THE WHIP OR THE FLEXIBLE TERMINAL EXTENSION TO LIFT THE ANTENNA.

Hoist antenna to top of support structure and secure in place using proper mounting hardware. Install the feed cable on the supporting structure, placing the cable connector approximately 12" below the lower end of the antenna support pipe. Secure cable to the support structure.

Attach the antenna input connector to the cable connector. The 18" RG-8A/U flexible terminal terminal extension provided on the antenna is supplied with a weatherproof connector housing made of neoprene. Slide the neoprene connector housing over the connector as far as it will go. This housing slides freely along the flexible terminal extension as the later has been lubricated with silicone grease . When the antenna installation is completed the neoprene housing should be in a vertical position in order to give the connectors maximum protection against the weather.

Route the cable as desired from the supporting structure to the base station transmitter housing and attach cable connector to transmitter.

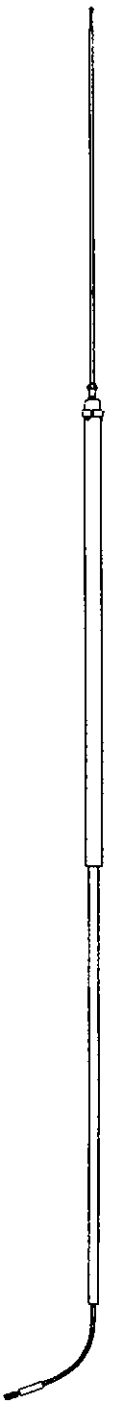

CELWAVE

CELWAVE
Division of Radio Frequency Systems
2 Ryan Road • Marlboro, New Jersey 07746-1899
732 / 462-1880 • Fax 732 / 462-6919

AF 31404B

MAJ. ITEM	SUB ITEM				DWG. NO.	GRP	DESCRIPTION / INSTRUCTIONS	QUANTITY PER UNIT		
34					B-39247	104	CABLE ASSEMBLY	X		
	35				A-21650		CABLE RG 8A/U 92½" LG.	1		
	36				A-21646		CONNECTOR UG 1185/U	1		
	37				A-20793		WEATHERSHIELD	1		
38					PL-A-14677-1		PD-46 CLAMP SET	1		
							PD-83			
							SEE CUT LENGTH CHARTS, A-21836 & A-21892			
						83	-1 25.00 → 29.75			
							-2 30.00 39.75			
							-3 40.00 50.00			
							-4 70.00 76.00			
							-5 144.00 175.00			

TITLE ASSEMBLY PD-83	DWG. NO. PL-C-20455-4	REVISION 0	12
MADE FOR 70-76 MHz	DATE 5-3-60		
DRAWN BY SLP/SBF SHEET 2 OF 2	CHECKED BY		

CELWAVE R.F. INC.

MARLBORO, N.J. PHOENIX, AZ.

© CELCO POLYTRACE 038

K+E 5 X 5 TO THE ½ INCH 359-6
KEUFFEL & ESSER CO. MADE IN U.S.A.

TITLE SKIRT CUT CHART FOR PD-83F ANTENNA			DRAWING NO. S-34776-2
DRAWN BY SBF	11-21-79	APPROVED BY JGR	10-27-80

phelps dodge Communications Company Marlboro, New Jersey

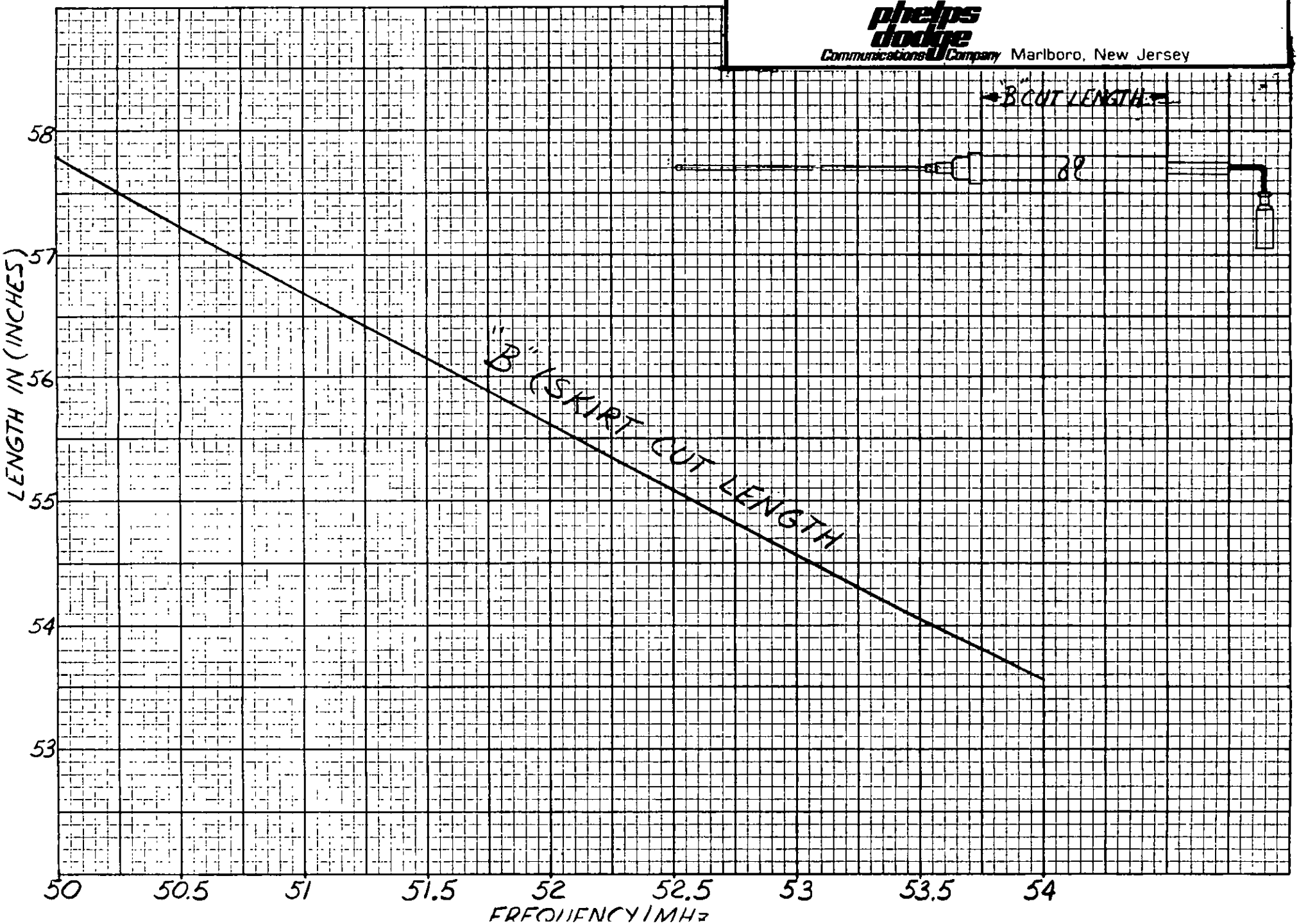

K+E 5 X 5 TO THE ½ INCH 359-6
KEUFFEL & ESSER CO. MADE IN U.S.A.

FIBERGLASS 93F

TITLE	WHIP CUT CHART FOR PD-83F ANTENNA	DRAWING NO. S-34776-1
DRAWN BY SRF	11-21-79	APPROVED BY JER 10-27-80

phelps dodge Communications Company Marlboro, New Jersey

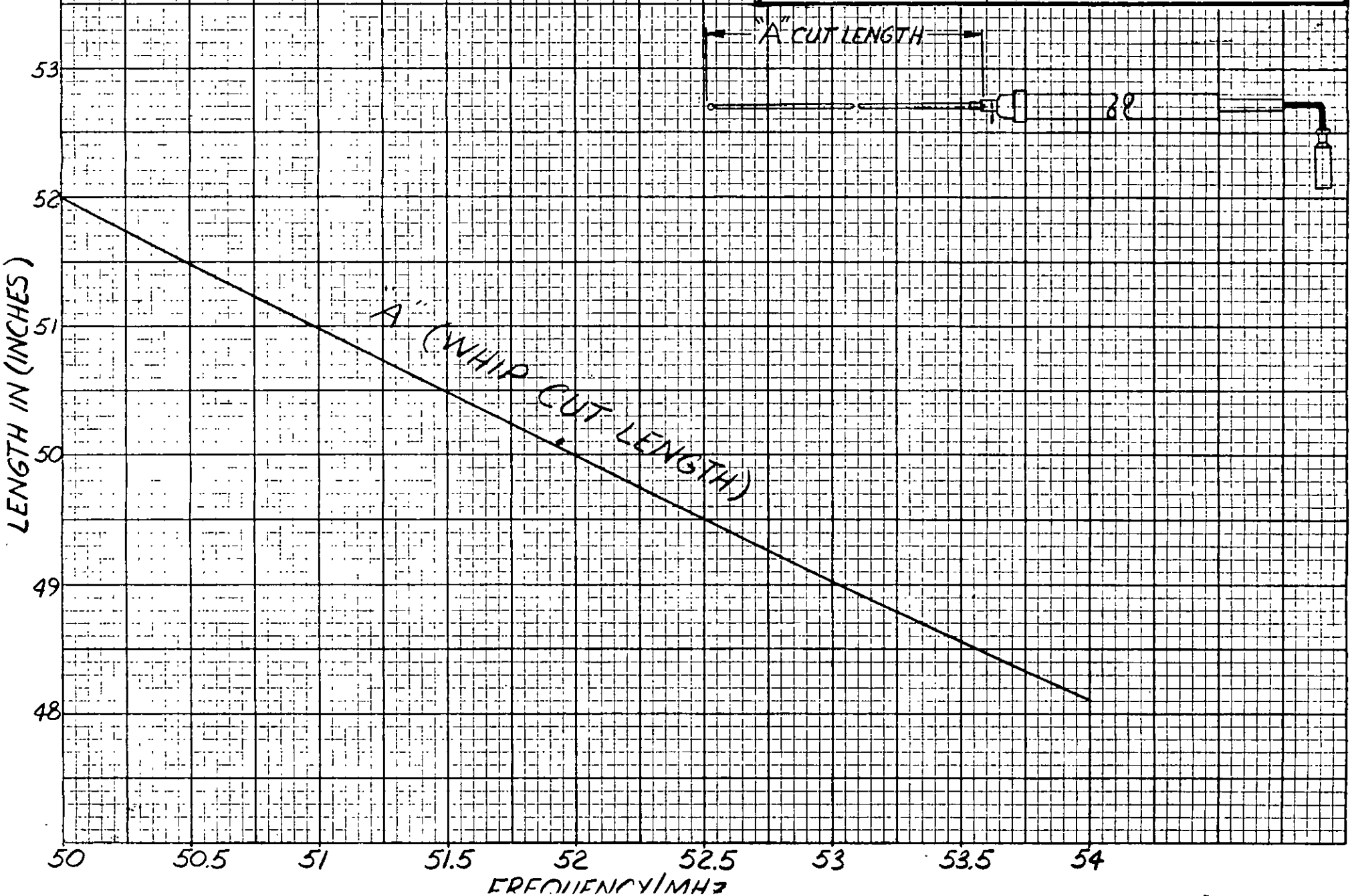

USED ON

FREQUENCY (MC)	A CUT ± 1/16 LENGTH (Whip)	B CUT ± 1/16 LENGTH (Skirt)	FREQUENCY (MC)	A CUT ± 1/16 LENGTH	B CUT ± 1/16 LENGTH
25.000	120 35/64	115 37/64	29.000	108 51/64	99 19/32
25.250	119 13/16	114 37/64	29.250	108 5/64	98 19/32
25.500	119 3/32	113 37/64	29.500	107 21/64	97 19/32
25.750	118 11/32	112 37/64	29.750	106 39/64	96 19/32
26.000	117 39/64	111 37/64	30.000	105 7/8	95 19/32
26.250	116 7/8	110 37/64	30.250	105 3/64	94 7/8
26.500	116 9/64	109 37/64	30.500	104 13/64	94 11/64
26.750	115 13/32	108 37/64	30.750	103 23/64	93 29/64
27.000	114 43/64	107 37/64	31.000	102 33/64	92 47/64
27.250	113 15/16	106 37/64	31.250	101 11/16	92 1/32
27.500	113 13/64	105 37/64	31.500	100 55/64	91 21/64
27.750	112 15/32	104 19/32	31.750	100 1/64	90 39/64
28.000	111 47/64	103 19/32	32.000	99 11/64	89 57/64
28.250	111	102 19/32	32.250	98 21/64	89 3/16
28.500	110 17/64	101 19/32	32.500	97 1/2	88 15/32
28.750	109 17/32	100 19/32	32.750	96 21/32	87 49/64

CUT LENGTHS FOR CAT. NO. 83A WILL BE 1/2 DIA. LESS 1/8 INCH

Unless otherwise specified --- All dimensions are in inches and title block tolerances apply. All threads to be Class II fit after plating where applicable and are to be gauge checked. Break all sharp edges .010-.015 after finish machining. All machined surfaces shall be smooth within 63 micro inches.

REVISION	
0	ADDED CUT LENGTH NOTE 12-13-78 MM

DO NOT USE BELOW 30 MHZ

DIMENSIONAL TOLERANCES		
BASIC	FRACTIONAL	DECIMAL
0"-1"	± .010	± .003
1"-6"	± 1/64	± .005
6"-24"	± 1/32	± .008
ALL ANGLES ± 15'		

TITLE: ELEMENT LENGTH CHART FOR 2" COAXIAL ANTENNA MADE FOR 83-509

DRAWING NO. S-218364

DRAWN BY J.R. 10-27-66 APPROVED BY WM

COMMUNICATION PRODUCTS CO., INC.
MARLBORO NEW JERSEY

K-E PHOENIX N100 TRACING CLOTH 82101

SHEET 1 OF 2

USED ON

FREQUENCY (MC)	A CUT ± 1/16 LENGTH (whip)	B CUT ± 1/16 LENGTH (Skirt)
33.000	95 53/64	87 3/64
33.250	94 63/64	86 21/64
33.500	94 9/64	85 5/8
33.750	93 5/16	84 29/32
34.000	92 15/32	84 13/64
34.250	91 5/8	83 31/64
34.500	90 51/64	82 25/32
34.750	89 61/64	82 5/64
35.000	89 1/8	81 23/64
35.250	88 15/32	80 55/64
35.500	87 13/16	80 11/32
35.750	87 5/32	79 53/64
36.000	86 1/2	79 21/64
36.250	85 27/32	78 53/64
36.500	85 3/16	78 5/16
36.750	84 17/32	77 13/16

FREQUENCY (MC)	A CUT ± 1/16 LENGTH	B CUT ± 1/16 LENGTH
37.000	83 7/8	77 19/64
37.250	83 7/32	76 51/64
37.500	82 37/64	76 9/32
37.750	81 29/32	75 25/32
38.000	81 1/4	75 17/64
38.250	80 37/64	74 49/64
38.500	79 15/16	74 17/64
38.750	79 9/32	73 3/4
39.000	78 5/8	73 15/64
39.250	77 31/32	72 47/64
39.500	77 21/64	72 15/64
39.750	76 21/32	71 23/32
40.000	76	71 7/32
40.250	75 15/32	70 27/32
40.500	74 59/64	70 31/64
40.750	74 25/64	70 1/8

.0468 7 7/4"
.4534 7 1/4"
7 7/4"
.5625

CUT LENGTHS FOR CAT. NO. 83A. WILL BE 2" DIM. LESS 1/8 INCH.

Unless otherwise specified --- All dimensions are in inches and title block tolerances apply. All threads to be Class II fit after plating where applicable and are to be gauge checked. Break all sharp edges .010-.015 after finish machining. All machined surfaces shall be smooth within 63 micro inches.

REVISION	
0	—

DIMENSIONAL TOLERANCES		
BASIC	FRACTIONAL	DECIMAL
0"-1"	± .010	± .003
1"-6"	± 1/64	± .005
6"-24"	± 1/32	± .008
ALL ANGLES ± 15'		

TITLE
ELEMENT LENGTH CHART FOR
2" COAXIAL ANTENNA
MADE FOR 83-509

DRAWING NO. S-21836A

DRAWN BY J R 10-27-60 APPROVED BY

COMMUNICATION PRODUCTS CO., INC.
MARLBORO NEW JERSEY

SHEET 2 OF

USED ON

FREQUENCY (MC)	A CUT ± 1/16 LENGTH (Whip)	B CUT ± 1/16 LENGTH (Stub)
41.000	73 55/64	69 3/4
41.250	73 5/16	69 25/64
41.500	72 49/64	69 1/32
41.750	72 15/64	68 21/32
42.000	71 45/64	68 19/64
42.250	71 5/32	67 15/16
42.500	70 5/8	67 37/64
42.750	70 3/32	67 13/64
43.000	69 35/64	66 27/32
43.250	69 1/64	66 31/64
43.500	68 15/32	66 7/64
43.750	67 15/16	65 3/4
44.000	67 25/64	65 25/64
44.250	66 55/64	65 1/64
44.500	66 21/64	64 21/32
44.750	65 25/32	64 19/64
45.000	65 1/4	63 15/16

FREQUENCY (MC)	A CUT ± 1/16 LENGTH	B CUT ± 1/16 LENGTH
45.250	64 53/64	63 5/8
45.500	64 13/32	63 21/64
45.750	63 63/64	63 1/32
46.000	63 9/16	62 47/64
46.250	63 9/64	62 27/64
46.500	62 23/32	62 1/8
46.750	62 9/32	61 53/64
47.000	61 55/64	61 33/64
47.250	61 7/16	61 7/32
47.500	61 1/64	60 59/64
47.750	60 19/32	60 39/64
48.000	60 5/32	60 5/16
48.250	59 47/64	60 1/64
48.500	59 5/16	59 23/64
48.750	58 57/64	59 13/32
49.000	58 15/32	59 7/64
49.250	58 3/64	58 51/64

CUT LENGTHS FOR CAT. NO. 83A WILL BE ADJUSTED LESS 1/8 INCH

Unless otherwise specified---All dimensions are in inches and title block tolerances apply. All thread dimensions to be met after plating where applicable and are t be gauge checked. Break all sharp edges .010-.015 after finish machining. All machined surfaces shall be smooth within 63 micro inches.

REVISION	
0	—

DIMENSIONAL TOLERANCES		
BASIC	FRACTIONAL	DECIMAL
0"-1"	± .010	± .003
1"-6"	± 1/64	± .005
6"-30"	± 1/32	± .008
ALL ANGLES ± 1°		

TITLE: ELEMENT LENGTH CHART FOR 2" COAXIAL ANTENNA MADE FOR 83-509

DRAWING NO. S-21836

DRAWN BY J.L. 16 27 64 APPROVED BY

COMMUNICATION PRODUCTS CO., INC.
MARLBORO NEW JERSEY

USED ON

FREQUENCY (MC)	A CUT ± 1/16 LENGTH	B CUT ± 1/16 LENGTH
49.500	57 39/64	58 1/2
49.750	57 3/16	58 3/16
50.000	56 3/4	57 25/32 .7V2

A B

$\frac{50}{52.5} = .952$

Extrapolate

56.75 x .952 = 54.0476

52.5 54.0476 55.0295

$\frac{50}{53.13} = .941$

53.13 → 53.4" 5437

CUT LENGTHS FOR CAT. NO. 83A WILL BE A DIM. LESS 1/8 INCH

Unless otherwise specified - - - All dimensions are in inches and title block tolerances apply. All thread dimensions to be met after plating where applicable and are to be gauge checked. Break all sharp edges .010-.015 after finish machining. All machined surfaces shall be smooth within 63 micro inches.

REVISION	
0	—

DIMENSIONAL TOLERANCES		
BASIC	FRACTIONAL	DECIMAL
0"-1"	± .010	± .003
1"-6"	± 1/64	± .005
6"-24"	± 1/32	± .008
ALL ANGLES ± 1°		

TITLE
ELEMENT LENGTH CHART FOR 2" COAXIAL ANTENNA MADE FOR 83-509

DRAWING NO. S-218361

DRAWN BY J C 10-27-60 APPROVED BY

COMMUNICATION PRODUCTS CO., INC.
MARLBORO NEW JERSEY

FREQUENCY "MC"	CUT LENGTH "A" (Whip)	CUT LENGTH "B" (Stub)	FREQUENCY "MC"	CUT LENGTH "A"	CUT LENGTH "B"
70.00	40 1/2	40	74.25	38	38 49/64
70.25	40 5/16	39 59/64	74.50	37 27/32	38 45/64
70.50	40 1/8	39 27/32	74.75	37 23/32	38 5/8
70.75	40	39 25/32	75.00	37 19/32	38 35/64
71.00	39 7/8	39 45/64	75.25	37 29/64	38 15/32
71.25	39 47/64	39 5/8	75.50	37 19/64	38 13/32
71.50	39 19/32	39 35/64	75.75	37 5/32	38 21/64
71.75	39 29/64	39 15/32	76.00	37	38 1/4
72.00	39 19/64	39 13/32			
72.25	39 5/32	39 21/64			
72.50	39	39 1/4			
72.75	38 7/8	39 11/64			
73.00	38 3/4	39 3/32			
73.25	38 19/32	39 1/32			
73.50	38 29/64	38 31/32			
73.75	38 19/64	38 29/32			
74.00	38 5/32	38 53/64			

USED ON

CUT LENGTHS FOR CAT. NO. 83A WILL BE 1/8 DIA. LESS 1/8 INCH

Unless otherwise specified - - - All dimensions are in inches and title block tolerances apply. All thread dimensions to be met after plating where applicable and are to be gauge checked. Break all sharp edges .010 - .015 after finish machining. All machined surfaces shall be smooth within 63 micro inches.

REVISION	
0	—

DIMENSIONAL TOLERANCES		
BASIC	FRACTIONAL	DECIMAL
0"-1"	± .010	± .003
1"-6"	± 1/64	± .005
6"-24"	± 1/32	± .008
ALL ANGLES ± 1°		

TITLE: ELEMENT LENGTH CHART FOR 83-509 (SPECIAL)

DRAWING NO. S-21836

DRAWN BY | APPROVED BY

COMMUNICATION PRODUCTS CO., INC.
MARLBORO, NEW JERSEY

FREQUENCY (MHz)	A CUT LENGTH 1/16	B CUT LENGTH 1/16
118.1	23	24 1/4
118.5	22 57/64	24 5/32
119.3	22 47/64	24
119.7	22 43/64	23 29/32
121.5	22 3/8	23 39/64
121.7	22 19/64	23 33/64
121.9	22 1/4	23 31/64
127.3	21 5/16	22 31/64
130.2	22 39/64	23 27/32
131.5	20 7/8	21 5/8
134.5	20	21 1/4
138.6	19 5/8	20 3/4

USED ON

SPECIALS

CUT LENGTHS FOR CAT. NO. 83A WILL BE "A" DIM. LESS 1/8 INCH

Unless otherwise specified — All dimensions are in inches and title block tolerances apply. All thread dimensions to be met after plating where applicable and are to be gauge checked. Break all sharp edges .010-.015 after finish machining. All machined surfaces shall be smooth within 63 micro inches.

REVISION	
0	—

DIMENSIONAL TOLERANCES		
BASIC	FRACTIONAL	DECIMAL
0"- 1"	± .010	± .003
1"- 6"	± 1/64	± .005
6"- 24"	± 1/32	± .008
ALL ANGLES ± 1°		

TITLE ELEMENT LENGTH CHART FOR 2" COAXIAL ANTENNA MADE FOR 83-509 SPECIAL

DRAWN BY

APPROVED BY

DRAWING NO. S-21892

PHELPS DODGE COMMUNICATIONS COMPANY
MARLBORO NEW JERSEY

D & W REPROGRAPHICS 6851-2

FREQUENCY (MC)	A CUT ± 1/16 LENGTH	B CUT ± 1/16 LENGTH	FREQUENCY (MC)	A CUT ± 1/16 LENGTH	B CUT ± 1/16 LENGTH
144.0	18 13/32	19 13/16	152.5	17 7/32	18 13/16
144.5	18 11/32	19 3/4	153.0	17 9/64	18 49/64
145.0	18 1/4	19 11/16	153.5	17 5/64	18 23/32
145.5	18 3/16	19 5/8	154.0	17	18 21/32
146.0	18 7/64	19 9/16	154.5	16 15/16	18 39/64
146.5	18 3/64	19 1/2	155.0	16 7/8	18 9/16
147.0	17 31/32	19 7/16	155.5	16 13/16	18 1/2
147.5	17 57/64	19 3/8	156.0	16 3/4	18 7/16
148.0	17 53/64	19 5/16	156.5	16 45/64	18 3/8
148.5	17 3/4	19 1/4	157.0	16 41/64	18 19/64
149.0	17 43/64	19 3/16	157.5	16 37/64	18 15/64
149.5	17 39/64	19 1/8	158.0	16 33/64	18 11/64
150.0	17 17/32	19 1/16	158.5	16 29/64	18 7/64
150.5	17 15/32	19 1/64	159.0	16 25/64	18 3/64
151.0	17 13/32	18 31/32	159.5	16 11/32	17 31/32
151.5	17 11/32	18 29/32	160.0	16 9/32	17 29/32
152.0	17 17/64	18 55/64	160.5	16 7/32	17 55/64

USED ON

CUT LENGTHS FOR CAT. NO. 83A WILL BE "A" DIM. LESS 1/8 INCH.

Unless otherwise specified---All dimensions are in inches and title block tolerances apply. All thread dimensions to be met after plating where applicable and are t be gauge checked. Break all sharp edges .010-.015 after finish machining. All machined surfaces shall be smooth within 63 micro inches.

REVISION	
0	1
	CUT LENGTH NOTE WAS 1" 12-13-78

DIMENSIONAL TOLERANCES

BASIC	FRACTIONAL	DECIMAL
0"-1"	± .010	± .003
1"-6"	± 1/64	± .005
6"-24"	± 1/32	± .008

ALL ANGLES ± 1°

TITLE
ELEMENT LENGTH CHART FOR 2" COAXIAL ANTENNA MADE FOR 83-509

DRAWING NO. S-218921

DRAWN BY

APPROVED BY

COMMUNICATION PRODUCTS CO., INC.
MARLBORO NEW JERSEY

K+E PHOENIX R166 56276

FREQUENCY (MC)	A CUT ± 1/16 LENGTH	B CUT ± 1/16 LENGTH	FREQUENCY (MC)	A CUT ± 1/16 LENGTH	B CUT ± 1/16 LENGTH	USED ON
161.0	16 11/64	17 51/64	169.5	15 3/16	16 59/64	
161.5	16 7/64	17 47/64	170.0	15 1/8	16 7/8	
162.0	16 1/16	17 43/64	170.5	15 3/32	16 13/16	
162.5	16	17 5/8	171.0	15 3/64	16 3/4	
163.0	15 61/64	17 37/64	171.5	15 1/64	16 11/16	
163.5	15 57/64	17 33/64	172.0	14 63/64	16 5/8	
164.0	15 53/64	17 29/64	172.5	14 15/16	16 9/16	
164.5	15 25/32	17 25/64	173.0	14 57/64	16 1/2	
165.0	15 23/32	17 11/32	173.5	14 55/64	16 7/16	
165.5	15 21/32	17 19/64	174.0	14 53/64	16 3/8	
166.0	15 19/32	17 15/64	174.5	14 25/32	16 5/16	
166.5	15 17/32	17 13/64	175.0	14 3/4	16 1/4	
167.0	15 31/64	17 5/32				
167.5	15 27/64	17 7/64				
168.0	15 23/64	17 1/16				
168.5	15 5/16	17 1/64				
169.0	15 1/4	16 31/32				

CUT LENGTHS FOR CAT. NO. 83A WILL BE "A" DIM. LESS 1/8 INCH

Unless otherwise specified---All dimensions are in inches and title block tolerances apply. All thread dimensions to be met after plating where applicable and are t be gauge checked. Break all sharp edges .010-.015 after finish machining. All machined surfaces shall be smooth within 63 micro inches.

REVISION	
0	—

DIMENSIONAL TOLERANCES

BASIC	FRACTIONAL	DECIMAL
0"-1"	± .010	± .003
1"-6"	± 1/64	± .005
6"-24"	± 1/32	± .008

ALL ANGLES ± 1°

TITLE
ELEMENT LENGTH CHART FOR
2" COAXIAL ANTENNA
MADE FOR 83-509

DRAWING NO. S-21892

DRAWN BY | APPROVED BY

COMMUNICATION PRODUCTS CO., INC.
MARLBORO NEW JERSEY

K+E PHOENIX N106 96276

A F 31 404C

0	REVISION
3	ECN-84-108-SF REDRAWN 5-17-84 P.O.B.

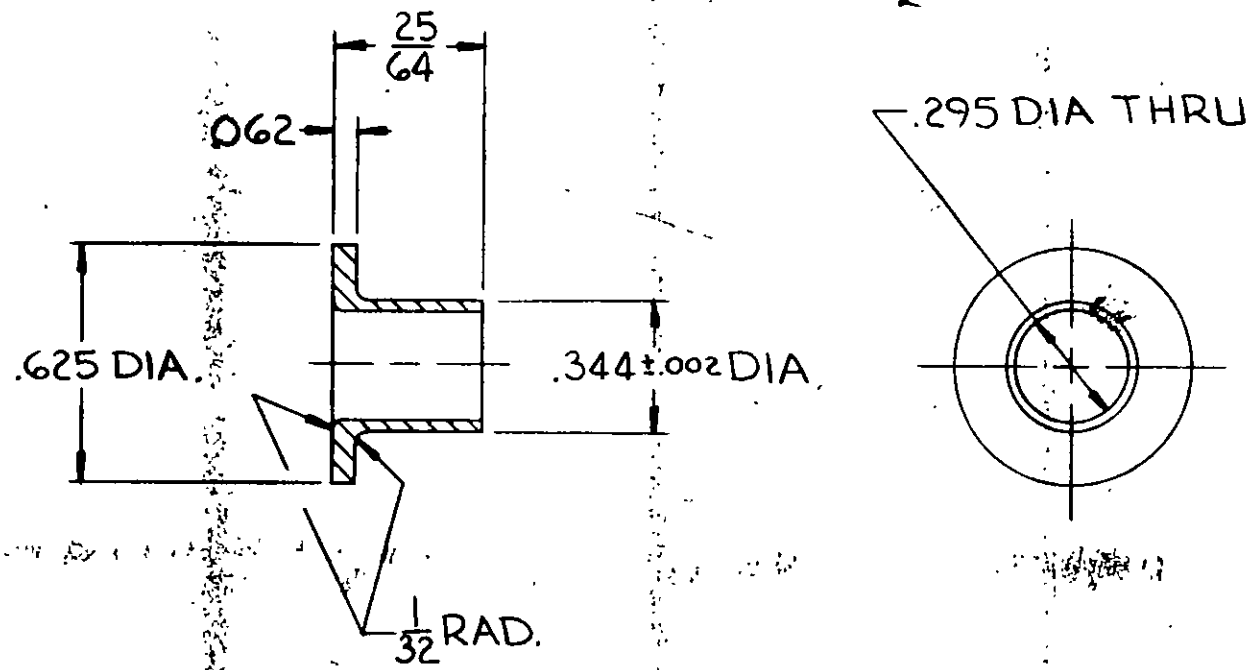

MATERIAL: BRASS

Unless otherwise specified — All dimensions are in inches and title block tolerances apply. All thread dimensions to be met after plating where applicable and are to be gauge checked. Break all sharp edges .010-.015 after finish machining. All machined surfaces shall be smooth within 63 micro inches.

USED ON M-18254

PROPRIETARY NOTE: "THE INFORMATION CONTAINED ON THIS DOCUMENT IS CONSIDERED TO BE CONFIDENTIAL MATERIAL, PROPRIETARY TO CELWAVE R.F. INC AND IS PROVIDED SOLELY FOR INFORMATION PURPOSES. THIS INFORMATION SHALL NOT BE USED BY ANYONE OTHER THAN CELWAVE R.F. INC. TO DESIGN OR CONSTRUCT ANY OF THE ITEMS DEPICTED, NOR SHALL IT BE DISCLOSED, DUPLICATED OR COPIED FOR ANY PURPOSE, NOR MADE AVAILABLE TO ANY THIRD PARTY WITHOUT THE PRIOR WRITTEN CONSENT OF A CELWAVE R.F. INC. OFFICIAL."

DIMENSIONAL TOLERANCES		
BASIC	FRACTIONAL	DECIMAL
0"- 1"	± .010	± .003
1"- 6"	± 1/64	± .005
6"- 24"	± 1/32	± .008
ALL ANGLES ± 1°		

TITLE CONNECTOR SLEEVE - INNER

DRAWING NO. A-19737

DRAWN BY SLP/SBF 6-28-57 APPROVED BY P.O.B. 6/19/84

CELWAVE R.F. INC.

MARLBORO, N.J. PHOENIX, AZ.

GRP	L 1 ±1/8	L 2 ±1/8	MATERIAL
101	76"	36"	A-40425-101
102	96	38	A-40425-102
103	127	44	A-40425-103
104	106	48	A-40425-104

B-31143	0	REVISION
	6	REDRAWN ON CAD. NO CHANGE WAS "A" SIZE FORMAT T.A.V. 5-6-92 SF 5-7-92

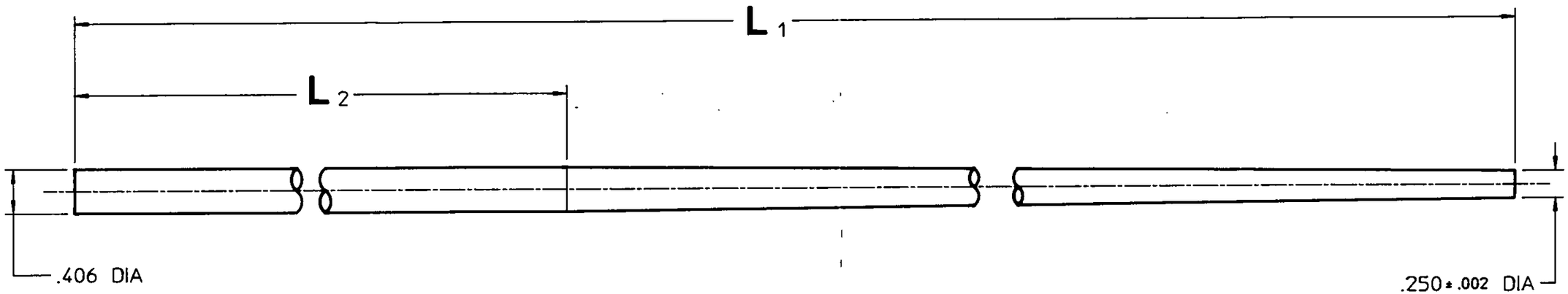

MATERIAL: SEE GRP TABLE

NOTE: PART TO BE FREE OF OIL & DIRT

DWG No.	MANUFACTURING PROCESS
31143-9	FABRICATE PER DWG

USED ON

PROPRIETARY NOTE: "THE INFORMATION CONTAINED ON THIS DOCUMENT IS CONSIDERED TO BE CONFIDENTIAL MATERIAL PROPRIETARY TO RADIO FREQUENCY SYSTEMS, INC. AND IS PROVIDED SOLELY FOR INFORMATION PURPOSES. THIS INFORMATION SHALL NOT BE USED BY ANYONE OTHER THAN RADIO FREQUENCY SYSTEMS, INC. TO DESIGN OR CONSTRUCT ANY OF THE ITEMS DEPICTED, NOR SHALL IT BE DISCLOSED, DUPLICATED, OR COPIED FOR ANY PURPOSE, NOR MADE AVAILABLE TO ANY THIRD PARTY WITHOUT THE PRIOR WRITTEN CONSENT OF A RADIO FREQUENCY SYSTEMS, INC. OFFICIAL"

Unless otherwise specified-

All dimensions are in inches and title block tolerances apply.
All thread dimensions to be met after plating where applicable and are to be gauge checked. Break all sharp edges .010-.015 after finish machining.
All machined surfaces shall be smooth within 63 micro inches.

DIMENSIONAL TOLERANCES		
BASIC	FRACTIONAL	DECIMAL
0"-1"	±.010	±.003
1"-6"	±1/64	±.005
6"-24"	±1/32	±.008
ALL ANGLES ±1°		

TITLE: WHIP

DRAWING NO. B-31143

CELWAVE DIVISION OF RADIO FREQUENCY SYSTEMS
MARLBORO, NEW JERSEY
PHOENIX, ARIZONA

DRAWN BY	RE/TAV	1-19-76
CHECKED BY		
APPROVED BY		

GRP.	FREQUENCY	A	B	C	D
101	25-29.75	A-21833-101	B-30247-101	A-40434-103	B-15531-101
102	30-39.75	A-21833-102	B-30247-102	A-40434-103	B-15531-102
103	40-50	A-21833-103	B-30247-103	A-40434-101	B-15531-103
104	70-78	A-21833-105	B-30247-104	A-18806-105	B-15531-104
105	144-175	A-21833-104	B-30247-106	A-18806-108	B-15531-105

D-20455 | 0 | REVISION
1 | [illegible]

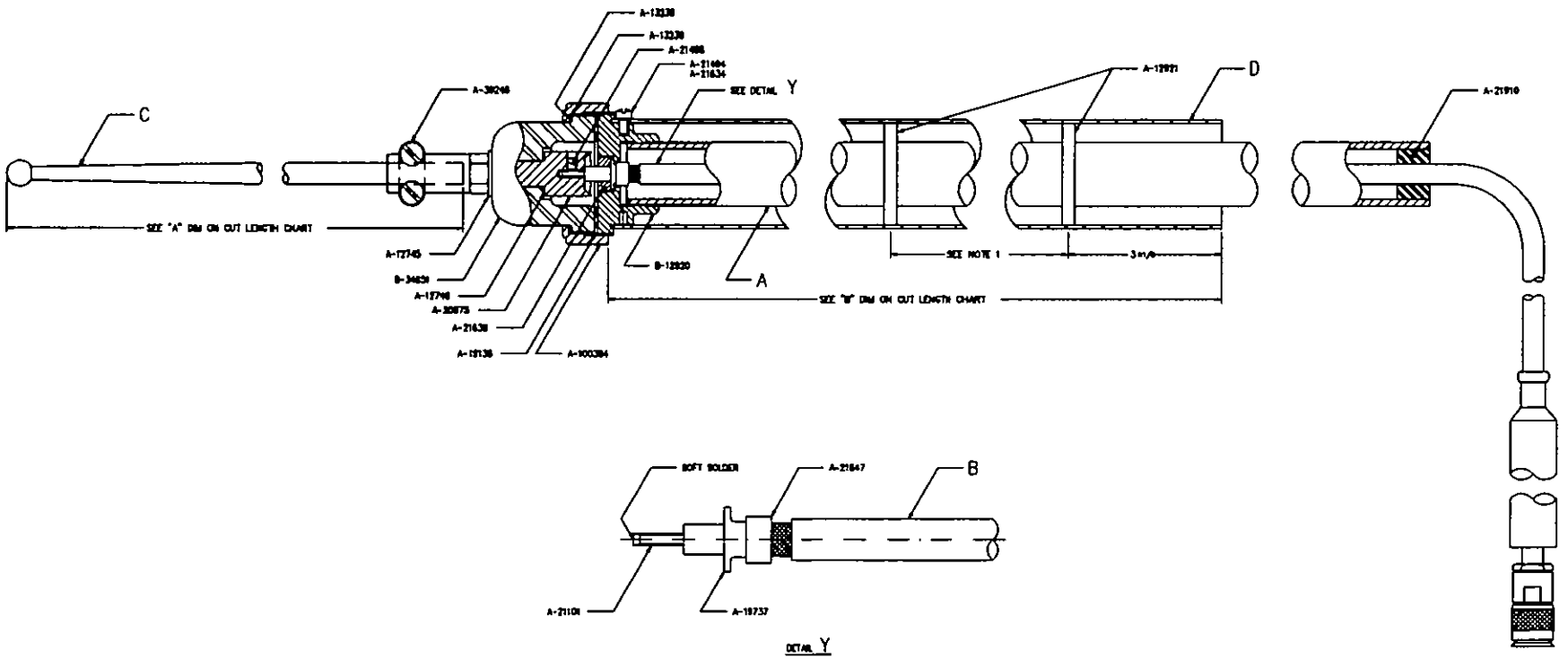

NOTES:
1 POSITION SORT INSULATOR HALFWAY BETWEEN FIRST SORT INSULATOR AND TOP OF SORT.

DWG No.	MANUFACTURING PROCESS
20455-0	ASSEMBLE PER DWG

WELD ON

[illegible]

Unless otherwise specified:
All dimensions are in inches and the black tolerances apply.
All thread dimensions to be met after plating where applicable and to be gauge checked. Break all sharp edges .005-.015 after finishing.
All machined surfaces shall be smooth within 63 micro inches.

GENERAL TOLERANCES		
DEC	FRACTIONAL	DECIMAL
0"-1"	±1/64	±.015
1"-4"	±1/32	±.031
4"-24"	±1/16	±.063
ALL ANGLES ±1°		

TITLE: ASSEMBLY OF A 63 ANTENNA

CELWAVE
MARLBORO, NEW JERSEY
PHOENIX, ARIZONA

DRAWING NO. D-20455

DRAWN BY	SLP/RG	4-8-90
CHECKED BY		
APPROVED BY	FOB	4-19-90

AF 31404D

O	REVISION
6	ECN-84-103-SF REDRAWN 5-11-84 P.D.B.
7	ECN-86-242-SF MATL ALLOY WAS ASTM SC84B 12-3-86 P.D.B.

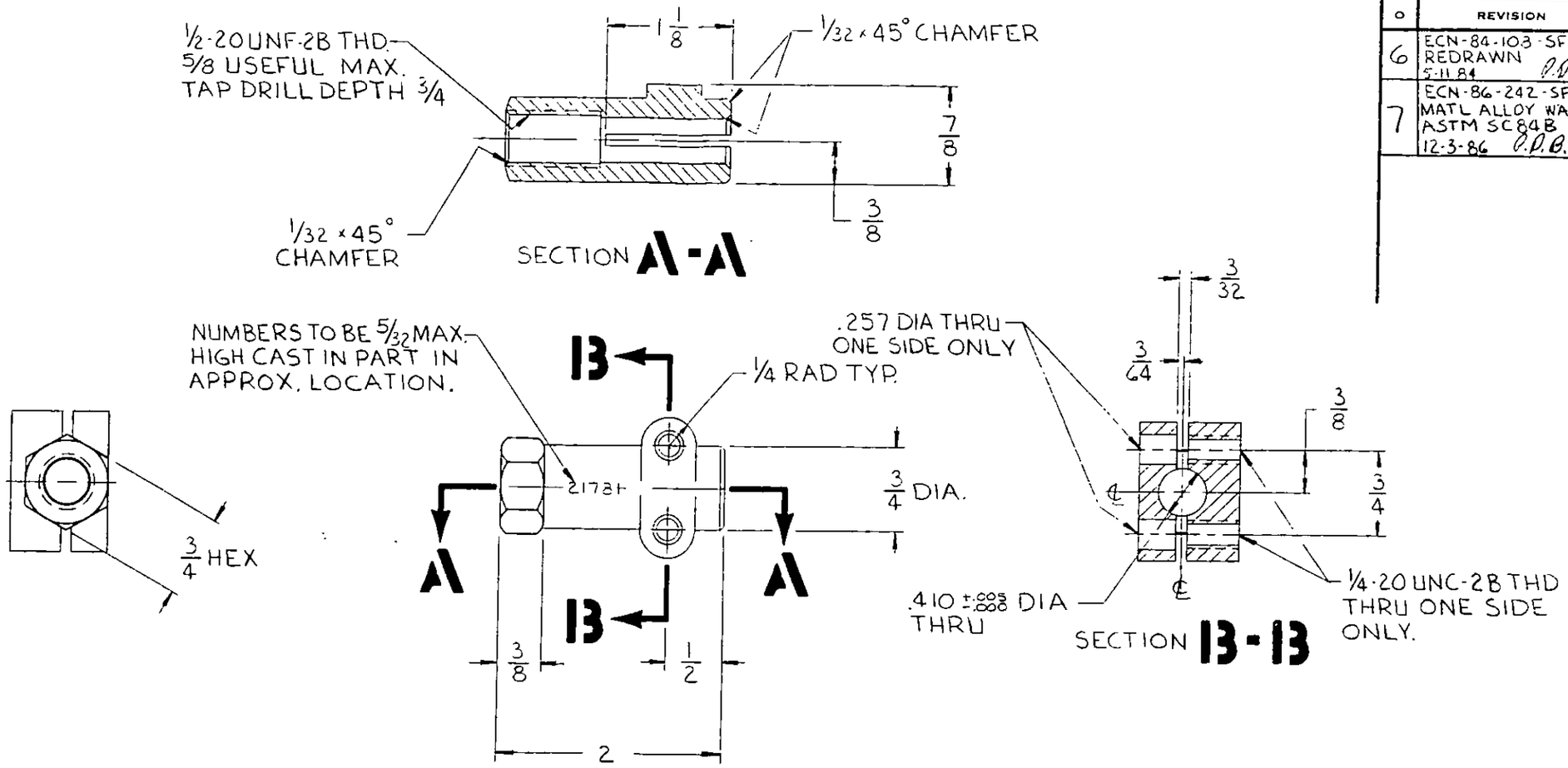

MATERIAL: ALUMINUM (DIE CAST) ALLOY 360

021781900

USED ON

PROPRIETARY NOTE: "THE INFORMATION CONTAINED ON THIS DOCUMENT IS CONSIDERED TO BE CONFIDENTIAL MATERIAL, PROPRIETARY TO CELWAVE R.F. INC. AND IS PROVIDED SOLELY FOR INFORMATION PURPOSES. THIS INFORMATION SHALL NOT BE USED BY ANYONE OTHER THAN CELWAVE R.F. INC. TO DESIGN OR CONSTRUCT ANY OF THE ITEMS DEPICTED, NOR SHALL IT BE DISCLOSED, DUPLICATED OR COPIED FOR ANY PURPOSE, NOR MADE AVAILABLE TO ANY THIRD PARTY WITHOUT THE PRIOR WRITTEN CONSENT OF A CELWAVE R.F. INC. OFFICIAL."

Unless otherwise specified –

All dimensions are in inches and title block tolerances apply.

All thread dimensions to be met after plating where applicable and are to be gauge checked. Break all sharp edges .010-.015 after finish machining

All machined surfaces shall be smooth within 63 micro inches.

DIMENSIONAL TOLERANCES		
BASIC	FRACTIONAL	DECIMAL
0"- 1"	± .010	± .003
1"- 6"	± 1/64	± .005
6"- 24"	± 1/32	± .008
ALL ANGLES ± 1°		

TITLE: WHIP SOCKET

DRAWING NO. B-21781

DRAWN BY SLP/BF 3-23-62 APPROVED BY P.D.B. 2/6/75

CELWAVE R.F. INC.

MARLBORO, N.J. PHOENIX, AZ.

DESIGN POLYTRACE 036

MAJ. ITEM	SUB ITEM				DWG. NO.	GRP	DESCRIPTION	QUANTITY PER UNIT		
					A-21751		INSTRUCTIONS OUTLINE			
1					D-20455-1		ASSEMBLY PD-83	X		
2					A-21644		GROUNDING PLATE ASSEMBLY	X		
	3				A-12831		ANTENNA RING. } PURCHASE AS ASSEMBLY	1		
	4				A-21639		RETAINING RING	1		
	5				A-12920		GROUNDING PLATE	1		
6										
7					A-18236		BALL	1		
8					A-31143	103	WHIP	1		
9					A-39246		SOCKET ASSEMBLY	X		
	10				B-21781		SOCKET	1		
	11				A-21716		SCREW	2		
	12				A-21529		LOCKWASHER	2		
13										
14										
15					A-12745		WASHER	1		
16					A-21498		SET SCREW	1		
17					B-12801		INSULATOR	1		
18					A-12746		WASHER	1		
19					A-20975		STUD	1		
20					A-13238		WASHER	1		
21					A-13239		GASKET	1		
22					A-19136		GASKET	1		
23					A-21494		SCREW	3		
24					A-21634		LOCKWASHER	3		
25					B-15531		SKIRT	1		
26					A-12921		INSULATOR	2		
27					A-21833	101	SUPPORT PIPE	1		
28					A-21910		PIPE PLUG	1		
29					A-21101		TUBE	1		
30					A-12737		SLEEVE-INNER	1		
31					A-21647		SLEEVE-OUTER	1		
32										
33										

TITLE ASSEMBLY PD-83

DWG. NO. D-20455-1

MADE FOR 25-29.75 MHz

DATE 5-3-60

DRAWN BY SLF/SBF SHEET 1 OF 2

CHECKED BY

REVISION

CELWAVE R.F. INC.

POLYTRACE 038

ITEM	SUBITEM				DWG. NO.	GRI	DESCRIPTION / INSTRUCTIONS	QUANTITY PER UNIT
34					B-39247	101	CABLE ASSEMBLY	X
	35				A-21650		CABLE RG 8^/u 176 1/2 LG.	1
	36				A-21646		CONNECTOR UG 1185/u	1
	37				A-20793		WEATHERSHIELD	1
38					PL-A-14677-1		PD-46 CLAMP SET	1
							SEE CUT LENGTH CHARTS, A-21836 OR A-21892	

TITLE ASSEMBLY PD-12

DWG. NO. PL-C-20455-1 REVISION 0 12

MADE FOR 25-29.75 MHz

DATE 5-3-60

DRAWN BY [illegible] SHEET 2 OF 2

CHECKED BY

CELWAVE R.F. INC.

MARLBORO, N.J. PHOENIX, AZ

POLYTRACE 038

0	REVISION
8	ECN 91-240-JC ADDED CALLOUT "FACE OFF THIS SURFACE .010-.015" NN 5-30-91

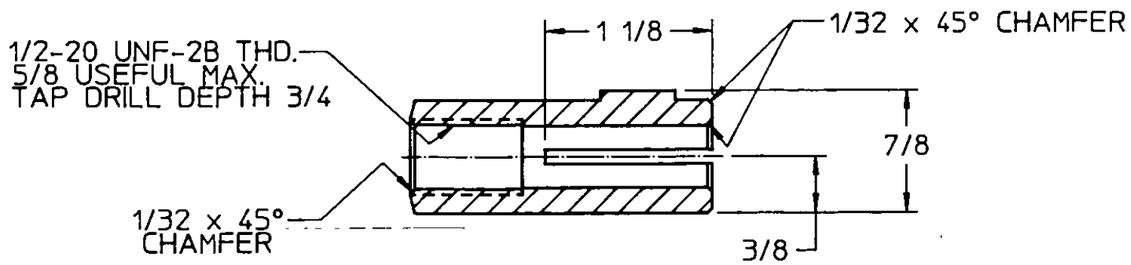

SECTION **A – A**

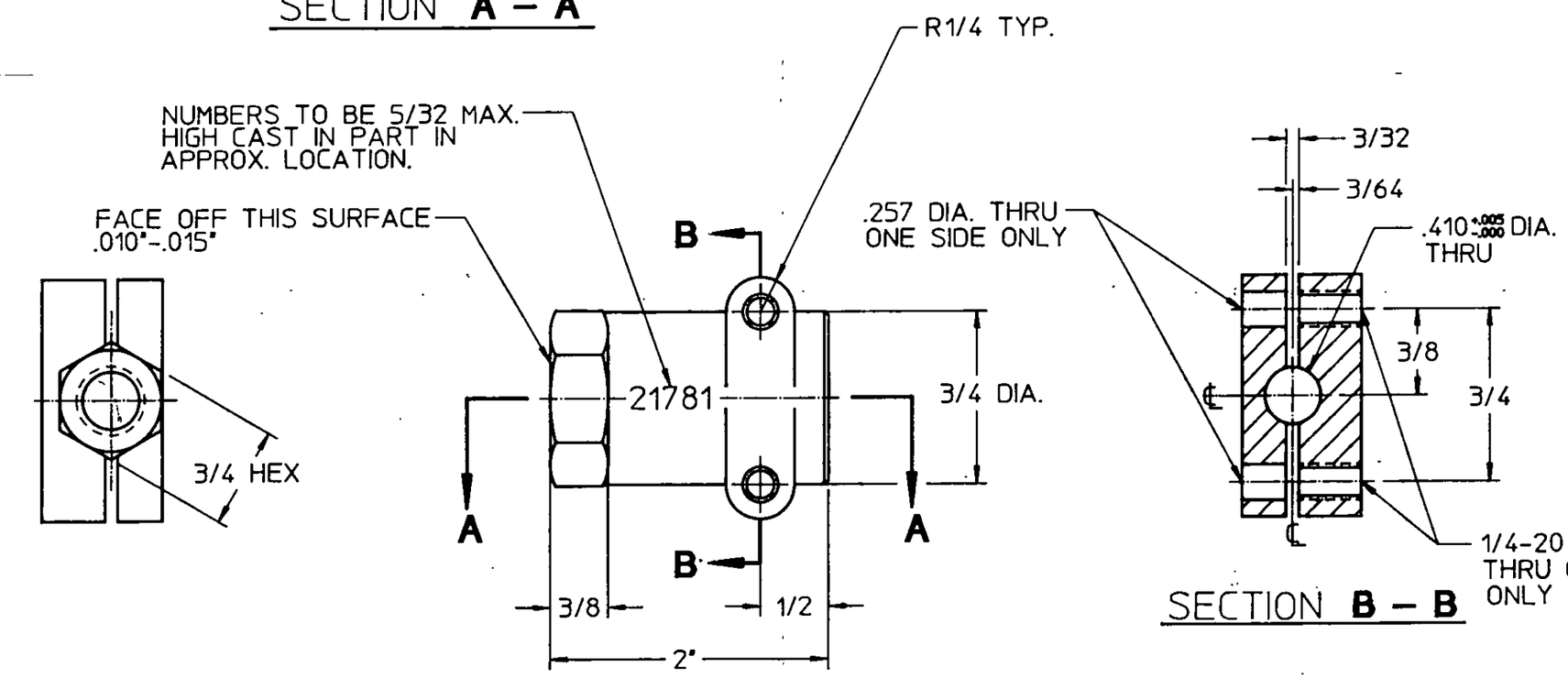

SECTION **B – B**

MATERIAL: ALUMINUM (DIE CAST) ALLOY 360

DWG No.	MANUFACTURING PROCESS
21781-9	FABRICATE PER DWG.

USED ON

PROPRIETARY NOTE: "THE INFORMATION CONTAINED ON THIS DOCUMENT IS CONSIDERED TO BE CONFIDENTIAL MATERIAL PROPRIETARY TO RADIO FREQUENCY SYSTEMS, INC. AND IS PROVIDED SOLELY FOR INFORMATION PURPOSES. THIS INFORMATION SHALL NOT BE USED BY ANYONE OTHER THAN RADIO FREQUENCY SYSTEMS, INC. TO DESIGN OR CONSTRUCT ANY OF THE ITEMS DEPICTED, NOR SHALL IT BE DISCLOSED, DUPLICATED, OR COPIED FOR ANY PURPOSE, NOR MADE AVAILABLE TO ANY THIRD PARTY WITHOUT THE PRIOR WRITTEN CONSENT OF A RADIO FREQUENCY SYSTEMS, INC. OFFICIAL"

Unless otherwise specified-

All dimensions are in inches and title block tolerances apply.

All thread dimensions to be met after plating where applicable and are to be gauge checked. Break all sharp edges .010-.015 after finish machining.

All machined surfaces shall be smooth within 63 micro inches.

DIMENSIONAL TOLERANCES		
BASIC	FRACTIONAL	DECIMAL
0"-1"	±.010	±.003
1"-6"	±1/64	±.005
6"-24"	±1/32	±.008
ALL ANGLES ±1°		

TITLE: WHIP SOCKET

DRAWING NO. B-21781

CELWAVE DIVISION OF RADIO FREQUENCY SYSTEMS
MARLBORO, NEW JERSEY
PHOENIX, ARIZONA

DRAWN BY	SBF/JC	3-23-62
CHECKED BY		
APPROVED BY	DDB	2-6-85

USED ON

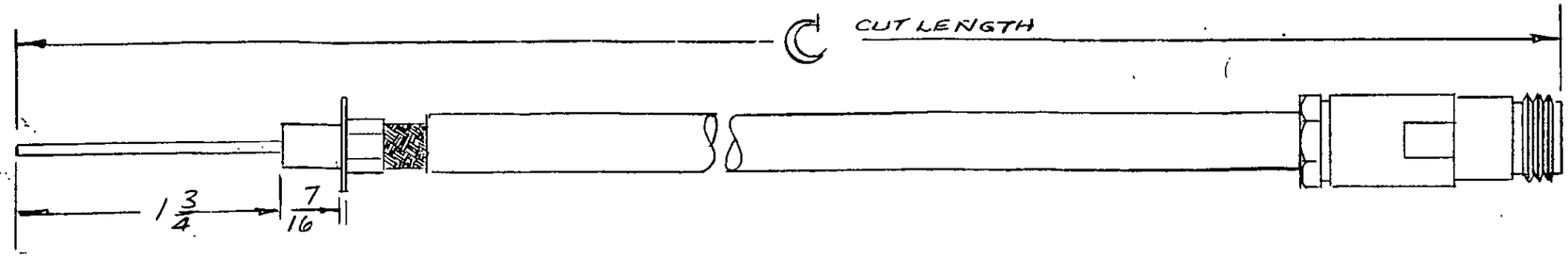

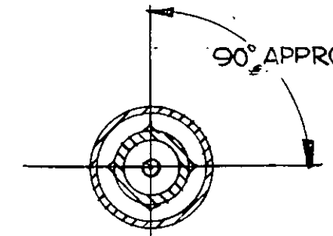

SECTION D-D

STAKE PART # 26 TO LOCK PART # 24 IN PLACE AFTER POSITIONING. STAKE SUPPORT PIPE ON ALTERNATE SIDES OF INSULATOR AS SHOWN IN DETAIL.

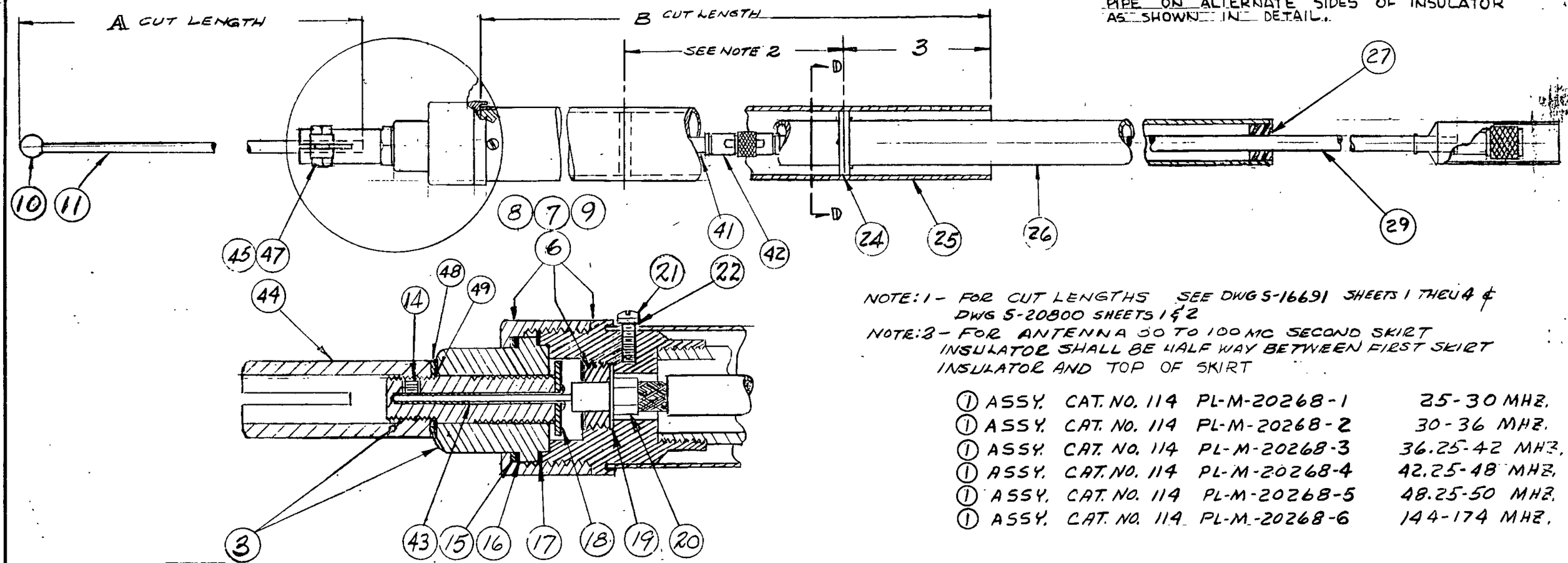

NOTE: 1 - FOR CUT LENGTHS SEE DWG S-16691 SHEETS 1 THRU 4 & DWG S-20800 SHEETS 1 & 2

NOTE: 2 - FOR ANTENNA 30 TO 100 MC SECOND SKIRT INSULATOR SHALL BE HALF WAY BETWEEN FIRST SKIRT INSULATOR AND TOP OF SKIRT

(1) ASSY.	CAT. NO. 114	PL-M-20268-1	25-30 MHZ.
(1) ASSY.	CAT. NO. 114	PL-M-20268-2	30-36 MHZ.
(1) ASSY.	CAT. NO. 114	PL-M-20268-3	36.25-42 MHZ.
(1) ASSY.	CAT. NO. 114	PL-M-20268-4	42.25-48 MHZ.
(1) ASSY.	CAT. NO. 114	PL-M-20268-5	48.25-50 MHZ.
(1) ASSY.	CAT. NO. 114	PL-M-20268-6	144-174 MHZ.

Unless otherwise specified — All dimensions are in inches and title block tolerances apply. All threads to be Class II fit after plating where applicable and are to be gauge checked. Break all sharp edges .010-.015 after finish machining. All machined surfaces shall be smooth within 63 micro inches.

REVISION	
0	REDRAWN FROM 'L' SIZE 8-12-60
4	ADDED TRANSF & TERM AFTER LIGHT, WIRE 5-18-61, 1-5-61
5	12-1-60
6	ADDED TERM AK 5-19-61
7	ADDED ITEMS 30, 31 & 34 SEES 100 & 105 4-17-64
8	CABLE CUTTING LENGTH DETAIL ADDED WITH ℄ CUT LENGTH 9-26-65
9	ITEM NOS 41 TO 49 WAS 40 TO 48 3-16-67
10	REVD. CAT. NO. 3-4-72; CHANGED ASSY. DWG. TO AGREE WITH REVISED PLS. REVD. R* FROM CODE 11-2-78
11	ADDED TITLE 1-16-79
12	ECN 82-081 BM REMOVED .418 DIA FOR ENGINEERING ONLY. NOTE #2 WAS FOR ANT. INSULATOR GROUNDING PLATE 3/29/82
13	ECN 82-145 BM REMOVED 1.445 .300 O.D. x .1 WIDE GROOVE FROM FACING DETAIL STAKING DETAIL 6-14-82

DIMENSIONAL TOLERANCES		
BASIC	FRACTIONAL	DECIMAL
0"-1"	± .010	± .003
1"-6"	± 1/64	± .005
6"-24"	± 1/32	± .008
ALL ANGLES ± 15'		

TITLE: BASE STATION COAXIAL UNITY-GAIN ANTENNA (FEATHERWEIGHT) 30-174 MC

DRAWING NO. M-20268A

DRAWN BY SLO 1-15-59 APPROVED BY [illegible] 9-15-60

COMMUNICATION PRODUCTS CO., INC.
MARLBORO NEW JERSEY