RADIAN

Radian
Communication
Services

2004

Revised Product Catalog

ROHN™ Products

Tips on How to Navigate:

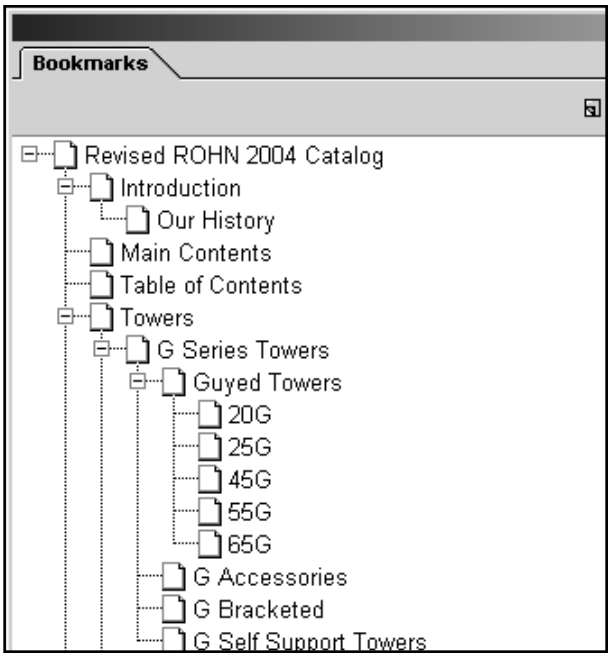

On the main menu, click on "Window"

Select "Bookmarks"

All sections of the catalog will be found here.

In order to go from either the Radian or ROHN catalog, please make your selection from the catalog selection page (shown below).

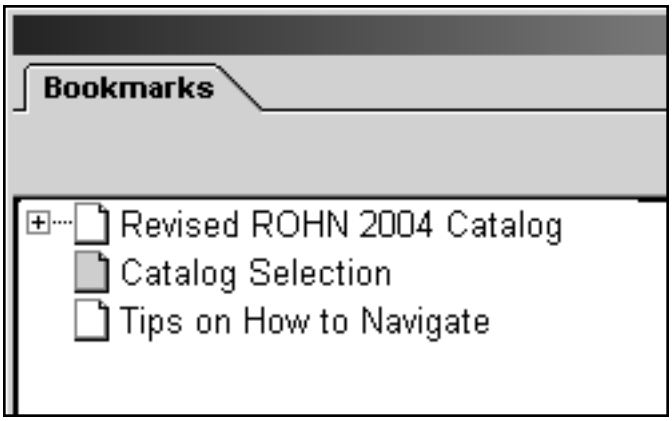

Thank you for opening our 2004 Catalog

Please select from our three product lines by clicking on the catalog covers below.

RADIAN

ROHN

RAM

To place an order or request a quotation, please contact us at:

US Plant Direct Sales

1-800-727-7646

Canada Plant Direct Sales

1-866-472-3426

catalogsales@radiancorp.com
rohnproducts@radiancorp.com

www.radiancorp.com

ROHN™ Products

Products for a Growing World of Technology

Our History

Since 1948, ROHN has been serving the needs of the communications industry with high quality products that include towers, poles, equipment enclosures, and accessories. ROHN's manufacturing plant is located in Peoria, Illinois with regional operations throughout the United States.

ROHN is dedicated to quality in both products and service. That dedication means your towers, poles, and accessories will be the finest available. It also means that you'll order from people who are experienced, efficient and knowledgeable. Our engineering department includes a staff of professional engineers and draftspersons using state of the art computer aided design and drafting equipment to produce custom designs. ROHN's traffic department directs the fast and efficient delivery of ROHN products through experienced contract carriers.

The Leader in Towers

From Amateur Radio to the latest in Wireless Technology, ROHN has the tower to meet your needs. Upon completion, all towers are hot dip galvanized after fabrication and can be manufactured in either tubular steel or solid rod. Whether its guyed, self-supporting, or rigid tube, all our towers are designed to continually meet the demands and specifications of the communications industry and can be seen all over the world. ROHN towers are made of the finest steel suitable to galvanizing and dipped in molten zinc to provide a durable, and virtually maintenance free finish.

Safety First

ROHN is dedicated to the safety of everyone working on and around our products. We urge you to read the safety section in our catalog to prevent any situations that would endanger yourself, your employees, or others.

Poles Conserve Valuable Land Space

ROHN offers a variety of pole types to meet your specific communication requirements. Our tapered steel, flanged steel, fiberglass and concrete poles all feature designs that blend well into the environment and require minimum space for installation. Specifically designed to your requirements, ROHN poles meet the stringent demands of today's communications environment.

Hot Dip Galvanizing

ROHN Hot Dip Galvanizing is one of the most cost effective ways to protect your steel products from corrosion. Since 1955 ROHN has provided hot dip galvanizing for their products.

Our Expert Construction Services

The ROHN construction group works closely with engineering, production, shipping, and field installation personnel to provide you with the highest quality products and widest range of services in the industry. ROHN's construction experts can assist you in meeting your stringent time schedule, and performance objectives with complete\ turnkey services.

The One Source you Need

ROHN, in addition to our towers and poles, can provide you with antenna and satellite mounts plus all the hardware and accessories you need to complete the project. All of our mounts and accessories are made with the same high quality and attention to detail as our larger products, so you know whatever it is, when you buy ROHN, you're getting the best.

ROHN™ Products

PRODUCTS FOR A GROWING WORLD OF TECHNOLOGY

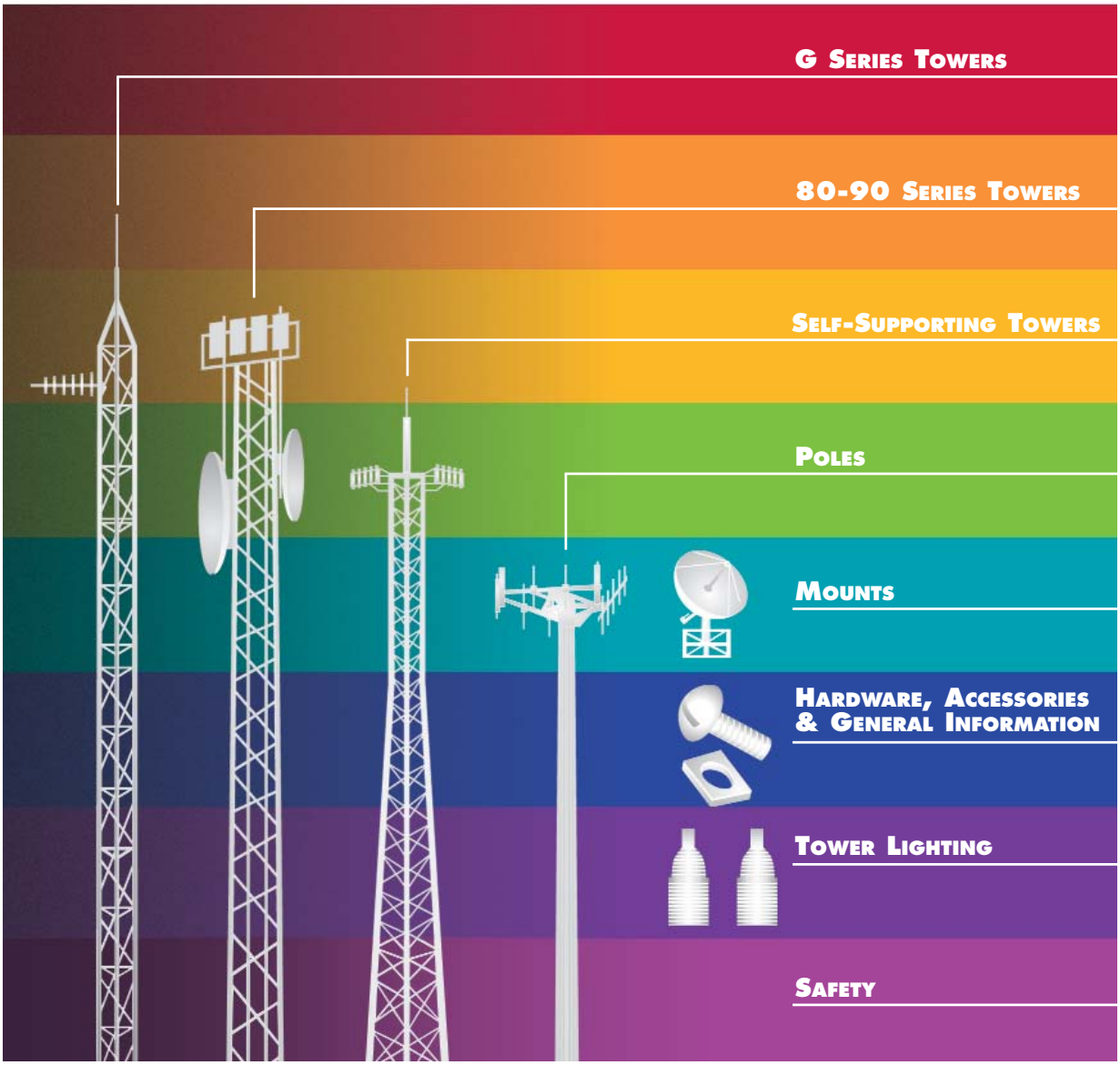

ROHN Products
Peoria Manufacturing Facility
6718 West Plank Road • Peoria, Illinois 61604 USA
Phone: 309 - 697 - 4400 • Fax: 309 - 697 - 5612
www.radiancorp.com • rohnproducts@radiancorp.com

Blank

Table of Contents

Blank

ROHN™ Products

TOWERS

PRODUCTS FOR A GROWING WORLD OF TECHNOLOGY

ROHN™ Products

Guyed Towers

Products for a Growing World of Technology

ROHN™ Products

G Series Towers

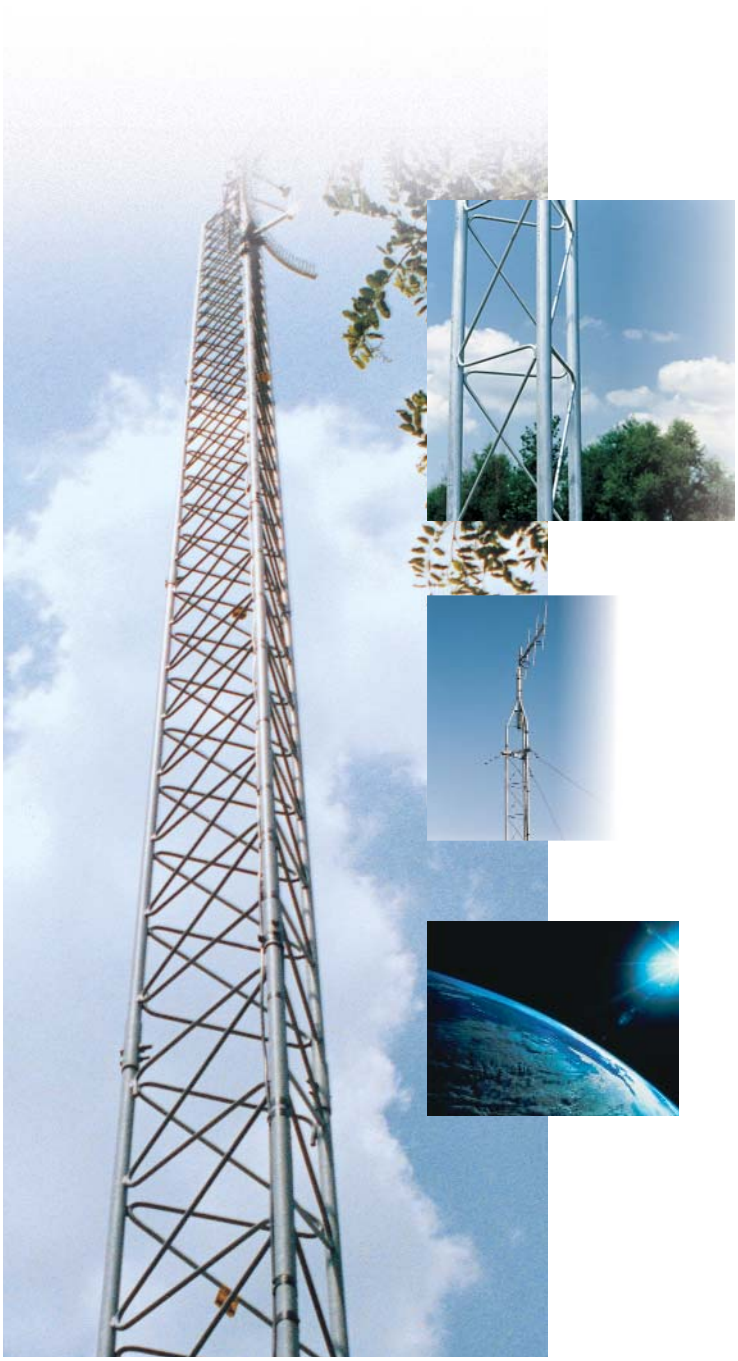

Products for a Growing World of Technology

G Series

Multi-Use Towers Built to Last

The G Series is a line of towers designed for efficiency, strength and versatility. The products in the G Series include the 20G, 25G, 45G, 55G, and 65G towers. These durable towers are entirely welded and fabricated with precision equipment and are suited to meet a variety of needs.

Designed For Efficiency and Strength

All towers in the G Series are constructed with high strength steel tubing and feature ROHN's exclusive Zig-Zag® solid rod bracing to provide exceptional strength. All G Series Towers are hot dip galvanized after fabrication. In this process, each section of the tower is totally immersed in molten zinc, allowing every square inch of the tower, inside and out, to be completely covered. Hot dip galvanizing protects all points of welding and construction against rust and corrosion while providing an attractive finish.

G Series

20G - Home TV Tower

The 20G is an ideal tower for home TV installations. It's designed and engineered for 2 square feet of antenna surface and will handle most home TV installations. Should a larger antenna be used, we recommend the 25G Series. The 20G tower is intended for bracketed installations only.

Features:

- Completely Hot Dip Galvanized after fabrication
- Accessories for 20G are same as the 25G and completely interchangeable
- Built on 12 1/2" equilateral triangle design
- High strength tubular legs joined by Zig-Zag® cross members
- Each 10′ section contains all required nuts and bolts inside one leg
- Entirely welded and fabricated with precision equipment

25 G

The 25G is available in the standard 10′ section length and a 7′ length which is UPS shippable. The 25G uses double bolted joints, proven to be the best method of joining tower sections for sturdiness and dependability. The 25G tower can be used in guyed, self-supporting or bracketed configurations according to specifications in the ROHN catalog. As a guyed structure, the 25G can rise to a maximum of 190 feet. Self supporting and bracketed heights depend on loading and are also specified in the ROHN catalog.

Features:

- Completely Hot Dip Galvanized after fabrication
- Accessories for 20G are same as the 25G and completely interchangeable
- Built on 12 1/2" equilateral triangle design
- High strength tubular legs joined by Zig-Zag® cross members
- Each 10′ section contains all required nuts and bolts inside one leg
- Entirely welded and fabricated with precision equipment
- Extra heavy-duty 1 1/4" steel tubing side rails
- Continuous solid steel rod bracing

45G Communications Tower

The 45G is a true multi-use structure that provides excellent strength for applications up to 300 feet. It's offered with either heavy steel tube or solid steel rod legs to satisfy a wide variety of needs under varied conditions. When properly installed, the standard tower will support loads as shown on various guyed and self-supporting information sheets in the ROHN catalog.

Features:

- Completely Hot Dip Galvanized after fabrication
- Heavy steel tube or solid steel rod side rails
- Built on 18" equilateral triangle design
- Utilizes 1 1/4" outside diameter, 14 gauge, special quality steel tubing or solid steel rod legs
- Zig-Zag® cross bracing is formed from a continuous 7/16" solid steel rod electrically welded every 15 3/4" on the side rails
- Each 10' sleeve is joined to the other and double bolted for extra strength

55G Communications Tower

Because of its rugged design, the 55G lends itself to a wide variety of used in the communications field, particularly where unusual wind loading and height requirements exist. The 55G was designed to provide excellent strength in heights up to 400 feet. When properly installed, the standard tower will support loads as shown on various guyed and self-supporting information sheets in the ROHN catalog.

Features:

- Completely Hot Dip Galvanized after fabrication
- Heavy steel tube or solid steel rod side rails
- Built on 18″ equilateral triangle design
- Utilizes high strength steel tubing side rails
- Zig-Zag® cross bracing is formed from a continuous 7/16″ solid steel rod electrically welded every 15 3/4″ on the side rails
- Each 10′ sleeve is joined to the other and double bolted for extra strength
- Adaptable to varying heights and loading requirements

65G Communications Tower

The 65G is designed to provide excellent rigidity and strength in applications up to 500 feet when guyed, and 80 feet when self-supporting. This high strength design covers a wide variety of communication uses. The 65G is completely prefabricated in welded sections allowing for quick and convenient installation.

Features:

- Tower sections and all hardware are completely Hot Dip Galvanized after fabrication
- Utilizes 2″ O.D. high strength steel side rails
- Built on 26 1/4″ equilateral triangle design
- Utilizes high strength steel tubing side rails
- Zig-Zag® cross bracing is formed from a continuous 5/8″ solid steel rod electrically welded every 22″ on the side rails
- Completely prefabricated in welded sections

ROHN™ Products

20G Tower

Products for a Growing World of Technology

Sheet D-2751
(Replaces D-2361)

20G Tower
Economy Home TV Tower

Part No.	Description	WT
20G	10′ tower section	30
20G7	7′ towers section	21
20A	9′ top section	26
20BG	3′ top section	8-1/2
★ BPC25G	Concrete base plate (sits on a pier pin - order pier pin separately)	27
★ 3/4x12PP	Pier pin (for BPC25 - one required)	1

20G and 20G7 tower sections are constructed with 1-1/4″ steel tubing side rails, with continuous steel solid rod Zig Zag cross bracing electrically welded throughout, and built on a 12-1/2″ equilateral triangular design. Completely hot dip galvanized after fabrication.

ROHN 25G accessories fit the 20G and 20G7 tower.

The #20 tower is not recommended for commercial, ham, CB or guyed installations.

★ Towers mounted on this base must be bracketed or guyed at all times.

Note: The price on #20 sections will be higher on shipments to the following states: Arizona, California, Idaho, Montana, Nevada, oregon, Utah, Washington, and Wyoming.

Refer to alphabetical/numerical price list for current prices.

F.O.B. Peoria Illinois.

Specifications subject to change without notice.

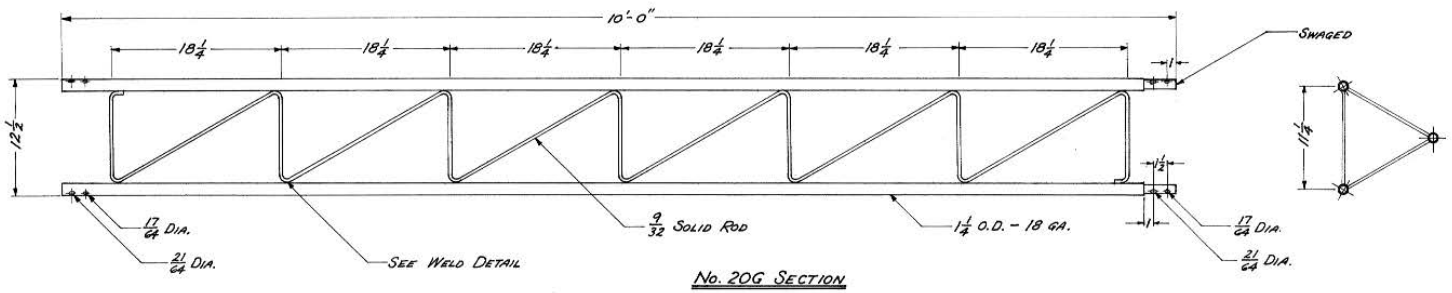

No. 20G SECTION

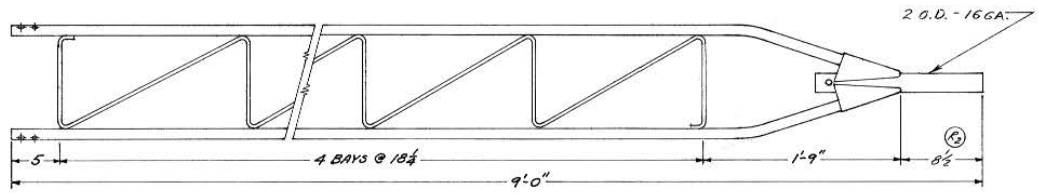

No. 20AG TOP SECTION

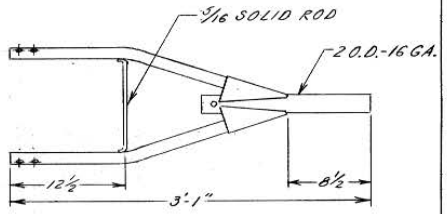

No. 20BG TOP SECTION

PLAN

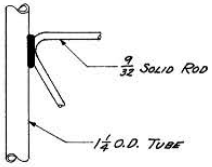

ELEVATION

WELD DETAIL

SUPPLIED WITH EACH SECTION:

3 - ¼" DIA. x 1½" NF BOLTS
3 - 5/16" DIA. x 1½" NF BOLTS

NOTE: ALL DIMENSIONS IN INCHES EXCEPT AS NOTED.

TOWER SPECIFICATIONS

DISTANCE BETWEEN SIDE RAILS (CENTER TO CENTER)	11¼"
OVERALL LENGTH OF SECTION	10'-0"
WEIGHT PER SECTION	32 LBS.
SIDE RAIL DIAMETER AND GAUGE	1¼" O.D. - 18 GA.
CROSS-SECTIONAL AREA OF ONE LEG	.1849 SQ. IN.
GROSS ALLOWABLE VERTICAL LOAD ON THE BOTTOM TOWER SECTION	11,700 LBS.
MAXIMUM ALLOWABLE AXIAL COMPRESSION OF THE CROSS-SECTION OF ONE SIDE RAIL	3,900 LBS.
MEASURED TENSILE STRENGTH OF ONE SIDE RAIL	12,810 LBS.
MEASURED TENSILE STRENGTH OF ONE BOLTED LEG JOINT	11,010 LBS.
MAXIMUM ALLOWABLE TENSION IN EACH BOLTED LEG JOINT	4,400 LBS.
SAFE MOMENT OF RESTRAINT	3,170 FT.-LBS.
L - UNBRACED LENGTH OF SIDE RAIL (DISTANCE BETWEEN CROSSPIECES)	18¼"
R - RADIUS OF GYRATION OF SIDE RAIL	.425"
L/R FOR MAIN LEG MEMBER	42.9
WIND LOAD PER LINEAL FOOT OF TOWER AT THE HORIZONTAL WIND PRESSURES (BASED UPON FLAT SURFACES) LISTED BELOW:	
30 PSF	7.39
40 PSF	9.86
50 PSF	12.32

No.	Revision Description	Date	By
R2	ADD SECTION 20BG. 8½ WAS 9.	2/16/79	
R1	REMOVED SCALE	11-2[illegible]	

Unarco-Rohn
Division of Unarco Industries, Inc.

TITLE: MODEL 20 TOWER SECTION

FILE NO.

MATERIAL	FINISH: GALVANIZED AS PER ASTM A-123		
DWN BY AED	DATE 9-28-68	UNLESS OTHERWISE SPECIFIED DIMENSIONS ARE GIVEN IN INCHES	
CKD BY O.H.	DATE 10-3-68	TOLERANCES: DEC. ± FRAC. ± ANGLES ±	DWG. NO. C-680954 R2
APPD RAK	DATE 10-3-68		

ROHN™ Products

25G Tower

Products for a Growing World of Technology

Blank

25G TOWER

Part No.	Description	Wt.
25G	10′ tower section	40
25G7	7′ tower section	28
25AG	9′ top section. Mast support tube is 2″ O.D. tube with bushing and set screw installed	31
25AG1	Top Section. Mast support tube is 1-1/4″ galv. pipe, threaded on top and projecting 12′ above apex of side rails	31
25AG2	Top Section. Mast support tube is 2-1/4″ O.D. tubing, 36″ total length, extending 18″ above apex of side rails	31
25AG3	Top Section. Mast support tube is 2-1/4″ O.D. tubing, extending 12″ above apex of side rails. A 2″ O.D. antenna stub will fit	31
25AG4	7′ top section. Upper end terminates in flat, triangular with 3-1/8″ diameter hole in center. Drilled to accept TB3 or TB4 thrust bearing.	31
25AG5	Top section. Mast support tube is 2-3/4″ O.D. and 2-9/16″ I.D. tubing 18″ total length.	31
25T	10′ tapered base section (for use with 3/4″x12PP pier pin).	60
25TGIA	10′ tapered base section (for use with A4197L base insulator)	75
25R	10′ insulator section for 25G tower (includes 3#10470 post insulators	74
25ACL	10′ anti-climb section	115
25ACL3	3 anti-climb metal sheets for attaching to tower section	65
25JBK	Join bolt kit	1
APL25G	Beacon plate	14
SB25G	3′-4′ short base section for use in concrete	10
SB25G5	5′ short base section for use in concrete	19
SBH25G	3′-4′ hinged short base section for use in concrete	14
BPC25G	Concrete base plate (sits on a pier-order pin separately)	27
3/4X12PP	Pier Pin (for BPC25G or 25TGA - one required)	1
BPH25G	Hinged base plate for concrete	21
1/2x12BB	Concrete base bolt with double nuts (for BPH25G - four required)	1
BP25G	Field base plate, use with DR25G drive rod set	7
DR25G	2′ drive rods, set of 3, for use with BP25G base plate	6
DT25	Drive tool for DR25G drive rod	17
SDB25G	Single field drive-in base plate assembly	20
PR25G	Peak roof base assembly, with adjustable hinged feet	14
FR25G	Flat roof mount	24
GA25GD	Guy bracket assembly	11
TB25D	Torque bars (for use with GA25GD guy bracket - requires3 shackles, 3/8″ maximum size - order seperately)	6
3/8S	3/8″ shackle	1
HBU	Universal house bracket (6″ to 30″)	15
HBUTVRO	Universal house bracket (18″ to 36″)	38
HB25AG0-15″	Adjustable house bracket - 15″ standoff	8
HB25AG0-24″	Adjustable house bracket - 24″ standoff	11
HB25AG0-36″	Adjustable house bracket - 36″ standoff	17
EB2525G	Universal eave bracket with hinged connection for pitched roof	7
TB50	Tower bushing for 45AG top (1-1/4″ I.D. x 2″ O.D.)	1
TB75	Tower bushing for 45AG top (1-1/2″ I.D. x 2″ O.D.)	1
TB3	Heavy duty thrust bearing, recommended for 2″ O.D. tubing (fits 25G4 top section)	3
TB25D	Torque bars (for use with GA25GD guy bracket - requires 3 shackels, 3/8″ maximum size - order separately	3
BPL 25G	Top plate with guy lugs for mountng TB3 orTB4 bearing	12
RP25G	Rotor post, left	3
RP25G CM	Rotor post, left	2
AS25G	Accessory shelf for mounting rotor	4
BA25G	Bearing/Accessory shelf assembly	18
SA253UA	Side arm assembly, 2-1/2″ to 3″ extention, with 2-1/4″ support tube	28
UHF25G	Side arm only of SA253UA	4
KY2068A16	DBS antenna support assembly with 1.66″ O.D. mounting tube	23
KY2068A15	DBS antenna support assembly with 1.5″ O.D. mounting tube	24
KY2068A2	DBS antenna supprot assembly with 2-3/8″ O.D. mounting pipe	32
TA25	Torque arm stabilizer assembly	35
25TDMKD	Top dish mount. Top plate has guy lugs and set screws to secure mounting pipe	30
DM25G2	Face dish mount w/2″ (2-3/8″ O.D.) x 5′ long standard pipe	42
WP25G	Work platform	10
SR245	Safety ring	8
2590MM	90 degree joint, male/male connection	12
2590FM	90 degree joint, female/male connection	11
2590FF	90 degree joint, female/male connection	10
EF2545	Aluminum erection fixture, 12′ long (fits all models with 1-1/4″ side rails). Use only to raise one 10′ section or any part of a section at one time. Not intended to be used for lifting individuals.	20
P2545	Pole only for EF2545	12
H2545	Head only for EF2545	8

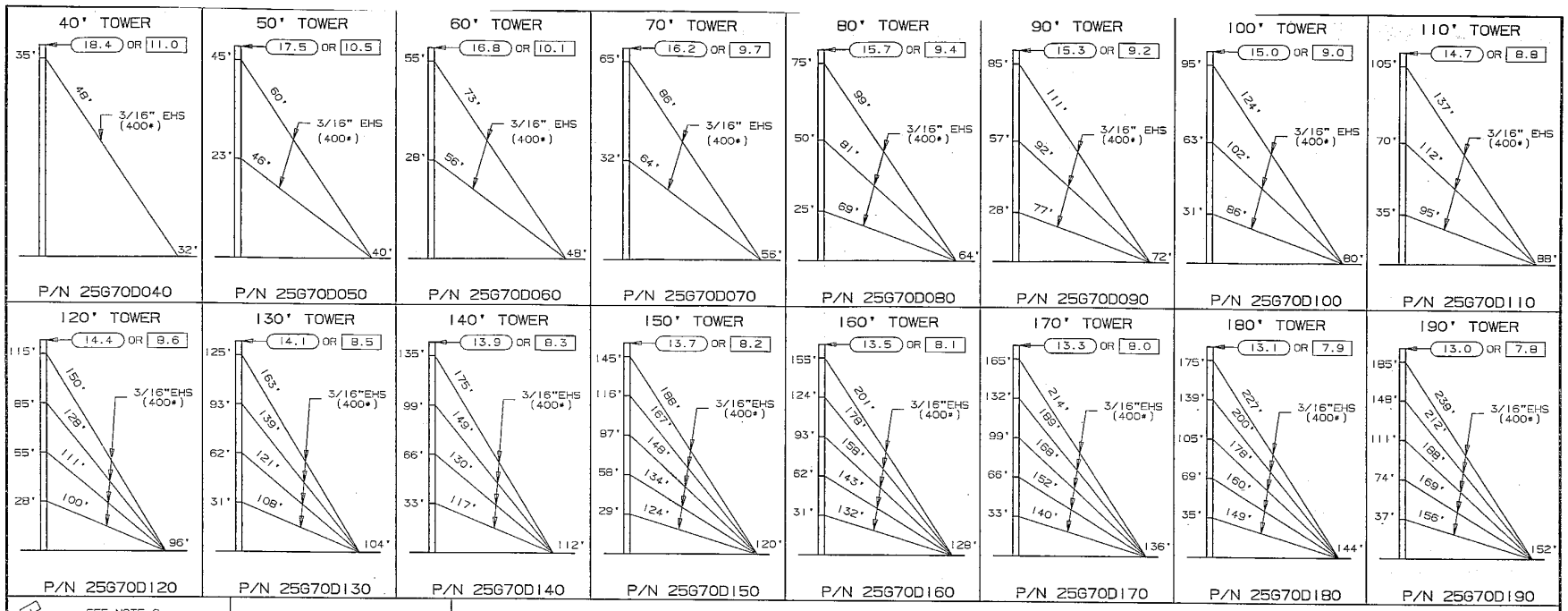

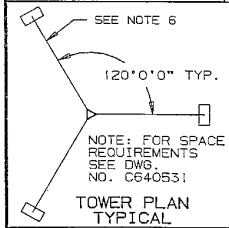

TOWER PLAN TYPICAL

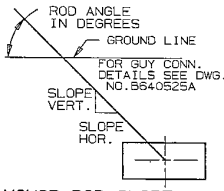

ANCHOR ROD SLOPE

GENERAL NOTES

1. TOWER DESIGNS ARE IN ACCORDANCE WITH APPROVED NATIONAL STANDARD ANSI/EIA-222-E-1991 (NO ICE).
2. ( ) ALLOWABLE PROJ. AREA (SQ. FT.) FOR ROUND MEMBER ANTENNAS. [ ] ALLOWABLE PROJ. AREA (SQ. FT.) FOR FLAT MEMBER ANTENNAS.
3. EQUIVALENT FLAT-PLATE ANTENNA AREAS, BASED ON EIA RS-222-C, MUST NOT EXCEED THE AREAS SHOWN FOR FLAT MEMBER ANTENNAS.
4. ANTENNA AND MOUNTS ARE ASSUMED SYMMETRICALLY PLACED AT THE TOWER APEX.
5. DESIGN ASSUME ONE 5/8" DIA. LINES ON EACH TOWER FACE.
6. ANCHOR RADIUS IS FROM TOWER BASE TO INTERSECTION OF ROD WITH GROUND.
7. FOR GUY HARDWARE INSTALLATION DETAILS SEE DWG. A871382.
8. TOWER DESIGNS AND GUY CHORD LENGTHS SHOWN ARE BASED ON LEVEL GROUND. ADD 6 PERCENT TO CHORD LENGTHS (FOR SAG AND CONNECTIONS) FOR FINAL CUT LENGTHS. ( ) INDICATES INITIAL TENSION FOR GUY WIRES IN POUNDS AT 60 DEGREES FAHRENHEIT.
9. DO NOT INSTALL OR DISMANTLE TOWERS WITHIN FALLING DISTANCE OF ELECTRICAL AND/OR TELEPHONE LINES.
10. TOWER ERECTION AND DISMANTLING MUST BE BY QUALIFIED AND EXPERIENCED PERSONNEL.
11. TEMPORARY STEEL GUYS, WHEN REQUIRED DURING ERECTION OR DISMANTLING, MUST BE SUPPLIED AND INSTALLED BY THE ERECTOR.
12. INSTALL WARNING PLATE (P/N ACWS) IN A HIGHLY VISIBLE LOCATION.
13. ALL ANTENNA INSTALLATIONS MUST BE GROUNDED IN ACCORDANCE WITH LOCAL AND NATIONAL CODES.
14. EXTRA CABLE CLAMPS HAVE BEEN PROVIDED FOR TURNBUCKLE SAFETY REQUIREMENTS. FOR DETAILS SEE DWG. B680324 LATEST REVISION.

TOWER HT.	BASE PIER REF. DWG. C610621		INNER ANCHOR DATA REF. DWG.: BLOCK-C620643; ROD-C660415						
	NO.	REAC. LBS.	BLOCK NO.	ROD NO.	ROD ANGLE	SLOPE HOR.	SLOPE VERT.	REAC. LBS. HOR.	REAC. LBS. VERT.
40'	CB1	1,800	4A	GAR30	47.7	10.9	12	710	780
50'	CB1	2,390	4A	GAC303	41.8	12	10.7	1,140	1,020
60'	CB1	2,530	4A	GAC303	42.1	12	10.9	1,190	1,070
70'	CB1	2,660	4A	GAC303	41.9	12	10.8	1,250	1,120
80'	CB1	3,350	4A	GAC303	39.3	12	9.8	1,700	1,400
90'	CB1	3,510	4A	GAC303	39.4	12	9.9	1,780	1,460
100'	CB1	3,650	4A	GAC303	39.4	12	9.8	1,860	1,530
110'	CB1	3,820	4A	GAC303	39.4	12	9.8	1,980	1,620
120'	CB1	4,540	4A	GAC305	37.5	12	9.2	2,480	1,900
130'	CB1	4,750	4A	GAC305	37.7	12	9.3	2,580	1,990
140'	CB1	4,910	4A	GAC305	37.5	12	9.2	2,680	2,060
150'	CB1	5,740	4A	GAC305	36.7	12	9.0	3,240	2,410
160'	CB1	5,920	4A	GAC305	36.6	12	9.0	3,360	2,500
170'	CB1	6,150	4A	GAC305	36.8	12	9.0	3,490	2,610
180'	CB1	6,340	4A	GAC305	36.7	12	9.0	3,630	2,700
190'	CB1	6,520	4A	GAC305	36.7	12	9.0	3,730	2,780

No.	Revision Description	Date	Rev By	Ckd By	Appd By
R4	UP DATE DRAWING	11-22-93	RKB	KTL	TS
R3	REV. NOTE NO. 3	6-8-92	RKB	WDU	TS
R2	REV'D GEN. NOTES WAS REV-D; NOW REV-E	1-27-92	RKB	KTL	TS
R1	CHANGED NOTE 7 TO NOTE 6 IN TOWER PLAN TYPICAL	3/1/91	CSR	KTL	TS

ROHN

Scale: NONE	By	Date
Drawn:	GRW/WDU	9/1/87
Checked:	WRF	9/24/87
App. Eng.:	RAM	10/2/87
App. Sales:	AE	2/12/88

Title: GUYING DETAILS FOR 40'-190' 25G TOWERS 70 MPH BASIC WIND SPEED (NO ICE)

DRAWING NO.: C870484 R4

Parts List P-622
(Replaces P-558)

January 1, 1996

Parts List for #25G Guyed Towers

70 MPH Basic Wind Speed (No Ice)

Tower Height

Part Number	40'	50'	60'	70'	80'	90'	100'	110'	120'	130'	140'	150'	160'	170'	180'	190'
25G	3	4	5	6	7	8	9	10	11	12	13	14	15	16	17	18
25AG2	1	1	1	1	1	1	1	1	1	1	1	1	1	1	1	1
BPC25G w/3/4 x 12PP	1	1	1	1	1	1	1	1	1	1	1	1	1	1	1	1
GA25GD	1	2	2	2	3	3	3	3	4	4	4	5	5	5	5	5
G.W. 3/16" EHS	175'	350'	425'	500'	800'	900'	1000'	1100'	1575'	1700'	1825'	2425'	2650'	2825'	2925'	3175'
BG2142	6	12	12	12	18	18	18	18	24	24	24	30	30	30	30	30
5/16" THH	6	12	12	12	18	18	18	18	24	24	24	30	30	30	30	30
T.B. 3/8 x 6 E&E	*	6	6	6	9	9	9	9	12	12	12	15	15	15	15	15
TBSAFETY	3	3	3	3	3	3	3	3	3	3	3	3	3	3	3	3
GAC303	*	3	3	3	3	3	3	3								
GAC305									3	3	3	3	3	3	3	3
AGKE	1	1	1	1	1	1	1	1	1	1	1	1	1	1	1	1
340028 Clamp	3	6	6	6	9	9	9	9	12	12	12	15	15	15	15	15
BGKE	2	2	2	2	2	2	2	2	2	2	2	2	2	2	2	2

* **Note:** For 40' ground tower, 3 GAR30 anchors and 3 5/8 TBE&J turnbuckles are supplied rather than the items shown in the above chart.

Items shown above are necessary for complete "ground" guyed towers. (**Note**: Local engineers must be consulted to determine adequate base and anchor details and wind loading criteria for all roof type installations.)

Anchor grounding (AGKE) and base grounding (BGKE), as recommended by EIA, are included with the tower material. However, extra copper wire may be required for roof installations. See appropriate sheet for grounding material and order extra copper wire as a separate item.

Installation information and a safety package (part number ACWS) are also included with the tower material. This package consists of one anti-climb warning sign and two Danger-Watch for Wires labels along with other printed safety information.

All types of antenna installations should be thoroughly inspected by qualified personnel and re-marked with hazard and warning labels at least twice a year to insure safety and proper performance.

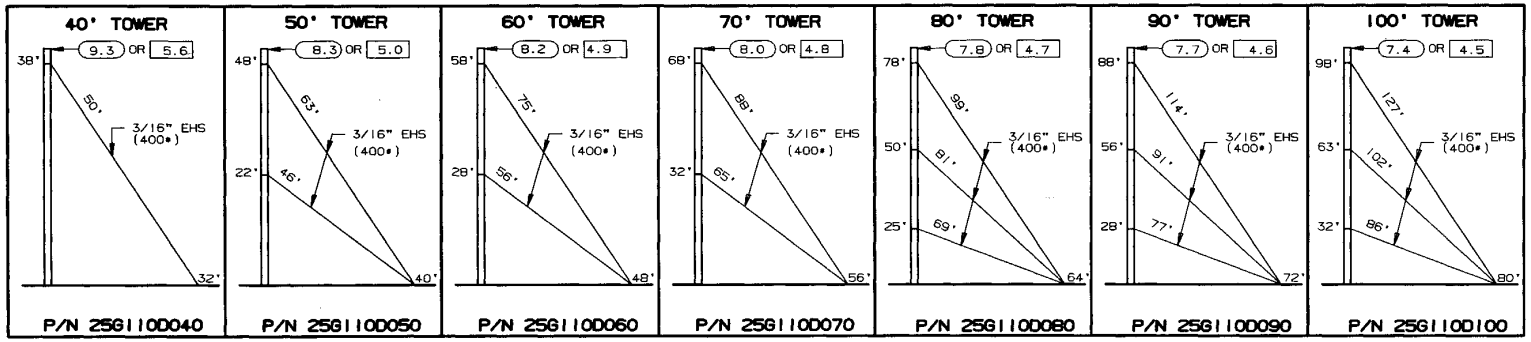

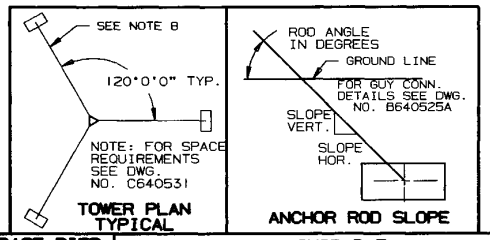

TOWER HT.	BASE PIER REF. DWG. C610621		ANCHOR DATA REF. DWG.: BLOCK-C620643; ROD-C660415						
	NO.	REAC. LBS.	BLOCK NO.	ROD NO.	ROD ANGLE	SLOPE HOR.	SLOPE VERT.	REAC. LBS. HOR.	REAC. LBS. VERT.
40'	CB1	2,650	4A	GAR30	49.8	10.1	12	1,030	1,210
50'	CB1	3,120	4A	GAC303	41.3	12	10.6	1,680	1,480
60'	CB1	3,490	4A	GAC303	41.6	12	10.7	1,830	1,630
70'	CB1	3,890	4A	GAC303	41.2	12	10.5	2,050	1,800
80'	CB1	4,650	4A	GAC303	39.2	12	9.8	2,690	2,190
90'	CB1	5,040	4A	GAC303	39.0	12	9.7	2,960	2,400
100'	CB1	5,400	4A	GAC303	39.1	12	9.8	3,150	2,560

GENERAL NOTES

1. TOWER DESIGNS ARE IN ACCORDANCE WITH APPROVED NATIONAL STANDARD ANSI/EIA-222-E-1991 (NO ICE).
2. ▭ ALLOWABLE PROJ. AREA (SQ. FT.) FOR ROUND MEMBER ANTENNAS.
   ▭ ALLOWABLE PROJ. AREA (SQ. FT.) FOR FLAT MEMBER ANTENNAS.
3. EQUIVALENT FLAT-PLATE ANTENNA AREAS, BASED ON EIA RS-222-C, MUST NOT EXCEED THE AREAS SHOWN FOR FLAT MEMBER ANTENNAS.
4. ANTENNA AND MOUNTS ARE ASSUMED SYMMETRICALLY PLACED AT THE TOWER APEX.
5. DESIGN ASSUME ONE 5/8" DIA. LINES ON EACH TOWER FACE.
6. ANCHOR RADIUS IS FROM TOWER BASE TO INTERSECTION OF ROD WITH GROUND.
7. FOR GUY HARDWARE INSTALLATION DETAILS SEE DWG. A871382.
8. TOWER DESIGNS AND GUY CHORD LENGTHS SHOWN ARE BASED ON LEVEL GROUND. ADD 6 PERCENT TO CHORD LENGTHS (FOR SAG AND CONNECTIONS) FOR FINAL CUT LENGTHS. ( ) INDICATES INITIAL TENSION FOR GUY WIRES IN POUNDS AT 60 DEGREES FAHRENHEIT.
9. DO NOT INSTALL OR DISMANTLE TOWERS WITHIN FALLING DISTANCE OF ELECTRICAL AND/OR TELEPHONE LINES.
10. TOWER ERECTION AND DISMANTLING MUST BE BY QUALIFIED AND EXPERIENCED PERSONNEL.
11. TEMPORARY STEEL GUYS, WHEN REQUIRED DURING ERECTION OR DISMANTLING, MUST BE SUPPLIED AND INSTALLED BY THE ERECTOR.
12. INSTALL WARNING PLATE (P/N ACWS) IN A HIGHLY VISIBLE LOCATION.
13. ALL ANTENNA INSTALLATIONS MUST BE GROUNDED IN ACCORDANCE WITH LOCAL AND NATIONAL CODES.
14. EXTRA CABLE CLAMPS HAVE BEEN PROVIDED FOR TURNBUCKLE SAFETY REQUIREMENTS. FOR DETAILS SEE DWG. B680324 LATEST REVISION.

No. ▲ Revision Description	▲ Date	▲ Rev. By	▲ Ckd By	▲ Appd By
R3 CHANGED REACTIONS	10-4-95	BRT	WDU	HA
R2 REV NOTE NO. 3	5-21-92	RKB	WDU	TS
R1 EIA-222-E-1991 WAS EIA-222-D	12-9-91	RKB	WDU/KTL	TS

ROHN

Scale: NONE	By	Date
Drawn:	RKB	12-27-90
Checked:	KKG	1-28-91
App. Eng.:	TS	2-21-91
App. Sales:	AE	2-21-91

Title: GUYING DETAILS FOR 40'-100' 25G TOWERS 110 MPH BASIC WIND SPEED (NO ICE)

ENG. FILE:

DRAWING NO.: C902041 R3

Parts List P-623
(Replaces P-574)

January 1, 1996

Parts List for #25G Guyed Towers

90 MPH Basic Wind Speed (No Ice)

Tower Height

Part Number	40'	50'	60'	70'	80'	90'	100'	110'	120'	130'	140'	150'	160'	170'	180'	190'
25G	3	4	5	6	7	8	9	10	11	12	13	14	15	16	17	18
25AG2	1	1	1	1	1	1	1	1	1	1	1	1	1	1	1	1
BPC25G w/3/4 x 12PP	1	1	1	1	1	1	1	1	1	1	1	1	1	1	1	1
GA25GD	1	2	2	2	3	3	3	3	4	4	4	5	5	6	6	6
G.W. 3/16" EHS	175'	350'	425'	500'	800'	900'	1000'	1100'	1575'	1750'	1825'	2425'	2650'	2775'	3000'	3150'
BG2142	6	12	12	12	18	18	18	18	24	24	24	30	30	36	36	36
5/16" THH	6	12	12	12	18	18	18	18	24	24	24	30	30	36	36	36
T.B. 3/8 x 6 E&E	*	6	6	6	9	9	9	9	12	12	12			6	6	6
T.B. 1/2 x 12 E&J												15	15	12	12	12
TBSAFETY	3	3	3	3	3	3	3	3	3	3	3	3	3	6	6	6
GAC303	*	3	3	3	3	3	3	3						3	3	3
GAC305									3	3	3					
GAC3455											3	3	3	3	3	
AGKE	1	1	1	1	1	1	1	1	1	1	1	1	1	2	2	2
340028 Clamp	3	6	6	6	9	9	9	9	12	12	12	15	15	18	18	18
BGKE	2	2	2	2	2	2	2	2	2	2	2	2	2	2	2	2

* **Note**: For 40' ground tower, 3 GAR30 anchors and 3 5/8 TBE&J turnbuckles are supplied rather than the items shown in the above chart.

Items shown above are necessary for complete "ground" guyed towers. (**Note:** Local engineers must be consulted to determine adequate base and anchor details and wind loading criteria for all roof type installations.)

Anchor grounding (AGKE) and base grounding (BGKE), as recommended by EIA, are included with the tower material. However, extra copper wire may be required for roof installations. See appropriate sheet for grounding material and order extra copper wire as a separate item.

Installation information and a safety package (part number ACWS) are also included with the tower material. This package consists of one anti-climb warning sign and two Danger-Watch for Wires labels along with other printed safety information.

All types of antenna installations should be thoroughly inspected by qualified personnel and re-marked with hazard and warning labels at least twice a year to insure safety and proper performance.

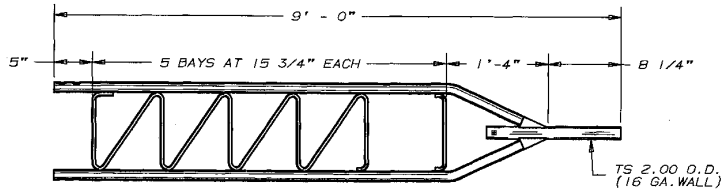

25AG

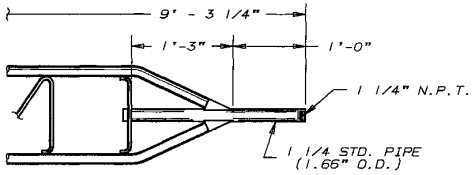

25AG1

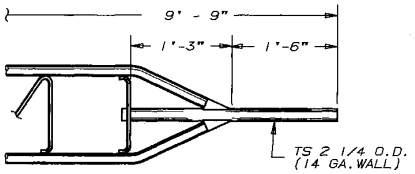

25AG2

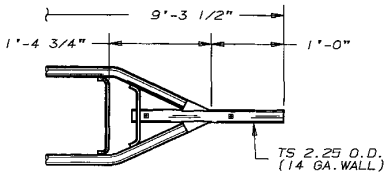

25AG3

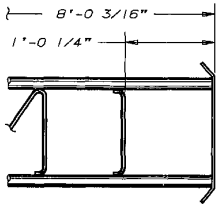

25AG4

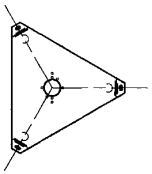

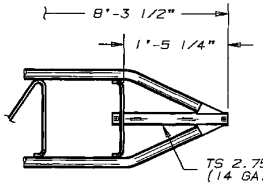

25AG5

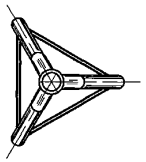

TYPICAL PLAN VIEW
(FOR ALL SECTIONS EXCEPT 25AG4)

NOTE: SPECIFICATIONS OF TOP SECTIONS ARE THE SAME AS SECTION NO. 25G EXCEPT AS NOTED ABOVE.

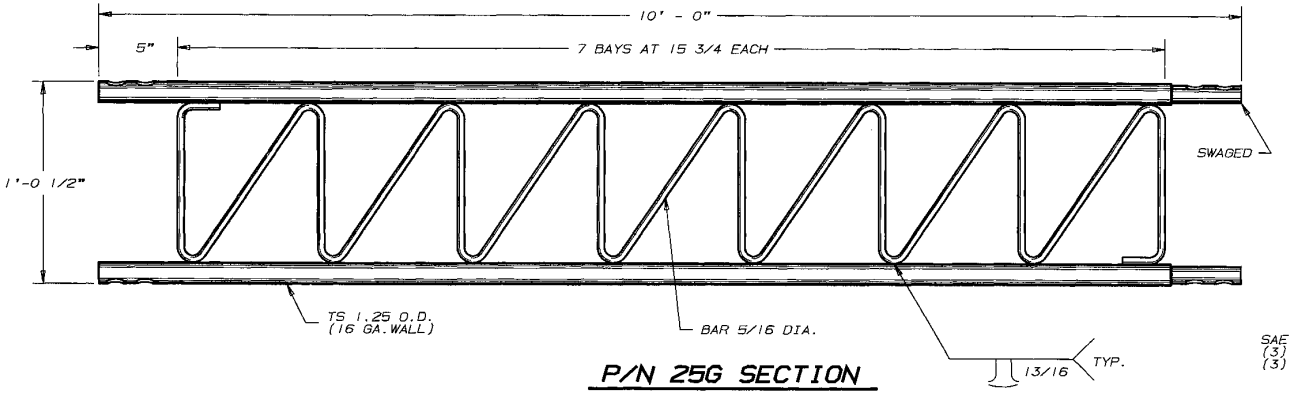

P/N 25G SECTION

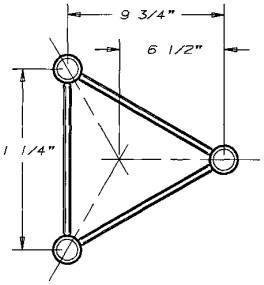

SAE GRADE 5 BOLT ASSY'S REQUIRED
(3) 1/4" DIA. X 1 1/2" LG. (NF BOLTS)
(3) 5/16" DIA. X 1 1/2" LG. (NF BOLTS)

SEC. >>	25G TOWER SECTION PROPERTIES		
ITEM	LEGS	BRACES	SECTION
SIZE	TS 1.25 ODX.065 WALL	BAR 5/16 DIA.	N/A
Fy	50.0	36.0	N/A
A	0.2420	0.0770	0.726
S	0.0682	0.0030	2.15
I	0.0426	0.00047	15.3
r	0.4196	0.0781	4.59
L	15.7500	18.7	VARIES
K	1.0	0.70	1.0
KL/r	37.5	167.6	VARIES
C	8.43	0.55	N/A
T	8.28	N/A	N/A
M	N/A	N/A	6.72
W	0.82	0.261	4.0
Ws	26.0	14.0	40.0

NOMENCLATURE

A = CROSS SECTIONAL AREA (SQUARE INCHES)
C = COMPRESSION CAPACITY WITH 1/3 INCREASE IN ALLOWABLE STRESS (KIPS)
I = MOMENT OF INERTIA ABOUT CENTROIDAL AXIS (INCHES**4)
Fy = MINIMUM YIELD STRENGTH (KSI)
K = EFFECTIVE LENGTH FACTOR (DIMENSIONLESS)
L = UNBRACED LENGTH (INCHES)
M = MOMENT CAPACITY WITH 1/3 INCREASE IN ALLOWABLE STRESS (FT.-KIPS).
N/A = NOT APPLICABLE
S = ELASTIC SECTION MODULUS (INCHES**3)
T = TENSION CAPACITY WITH 1/3 INCREASE IN ALLOWABLE STRESS (KIPS)
r = RADIUS OF GYRATION (INCHES)
W = WEIGHT PER FOOT (POUNDS)
Ws = WEIGHT PER SECTION (POUNDS)

NOTE: CAPACITIES SHOWN ARE BASED ON ANSI/EIA-222-E-1991.

No.	Revision Description	Date	Rev By	Ckd By	Appd By
R9	REV'D EIA-222-D-1986 TO EIA-222-E-1991	9-10-91	RKB	[illegible]	[illegible]
R8	REDRAWN AND REVISED	6/13/91	CSR	RKB	TS
R7	REDRAWN AND REVISED SPEC.	2/16/88	GPW	WDU	RAM

ROHN

Scale: NONE	By	Date
Drawn:	GPW	2/16/88
Checked:	WDU	2/24/88
App. Eng.:	RAM	2/25/88
App. Sales:	AE	2/25/88

Title: 25G SECTION ASSEMBLY

DRAWING NO.: C630625 R9

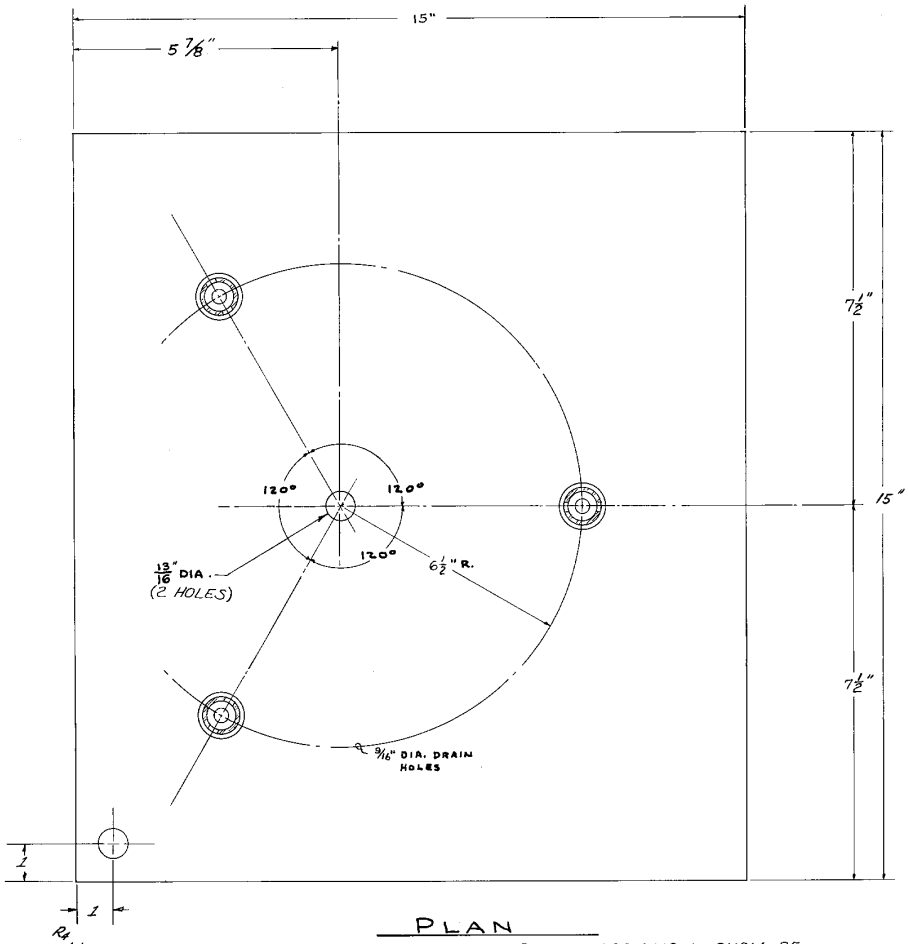

PLAN

NOTE: DUE TO VARIABLES INVOLVED IN ROOF AND OTHER INSTALLATIONS, IT SHALL BE THE CUSTOMER'S OR INSTALLER'S RESPONSIBILITY TO PROVIDE STRUCTURALLY ADEQUATE SUPPORTS FOR PIER & ANCHOR CONNECTIONS. IT MAY ALSO BE NECESSARY FOR THE CUSTOMER OR INSTALLER TO SECURE THE SERVICE OF A LOCAL ENGINEER TO DETERMINE THAT INSTALLATION COMPLIES WITH LOCAL BUILDING CODES.

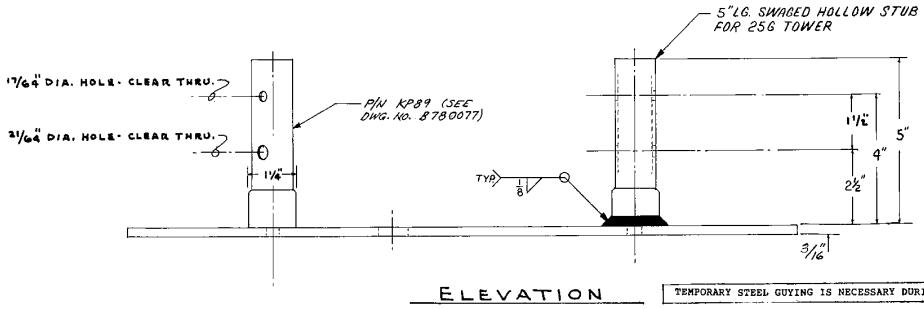

ELEVATION

TEMPORARY STEEL GUYING IS NECESSARY DURING INSTALLATION AND DISMANTLING.

BASE PLATE FOR CONCRETE PIER (BPC 25G)

NOTE:
FOR USE WITH GUYED AND BRACKETED TOWERS ONLY

			R7	ADDED TEMP. GUYING NOTE	11-5-86	RJB
			R6	DELETE EXCESS HOLES	8-31-78	WRB
			R5	CHANGED STUB FROM 16 GA. TO 14 GA, ADDED 1/4"	7-26-78	AED
			R4	ADDED NOTE	7-6-76	CH
R9	REVISE R SIZE	7-17-92	R3	REVISED STUB & ADDED WELD SYMBOL	1-9-75	RDB
R8	REV. TEMP. GUYING NOTE	12-6-88	R2	ADDED NOTE & REMOVED SCALE	11-26-73	JER

R1 REVISED 3-22-73 D.M.
R REVISED 6-5-64 O.H.

DRAWN ck	CUSTOMER	TITLE
CHECKED RAK		BASE PLATE FOR MODEL 25 TOWER
APPROVED ck		DRAWING NO.
DATE 8-31-61	ROHN MFG. PEORIA, ILLINOIS	C 610831 R9
SCALE ~		

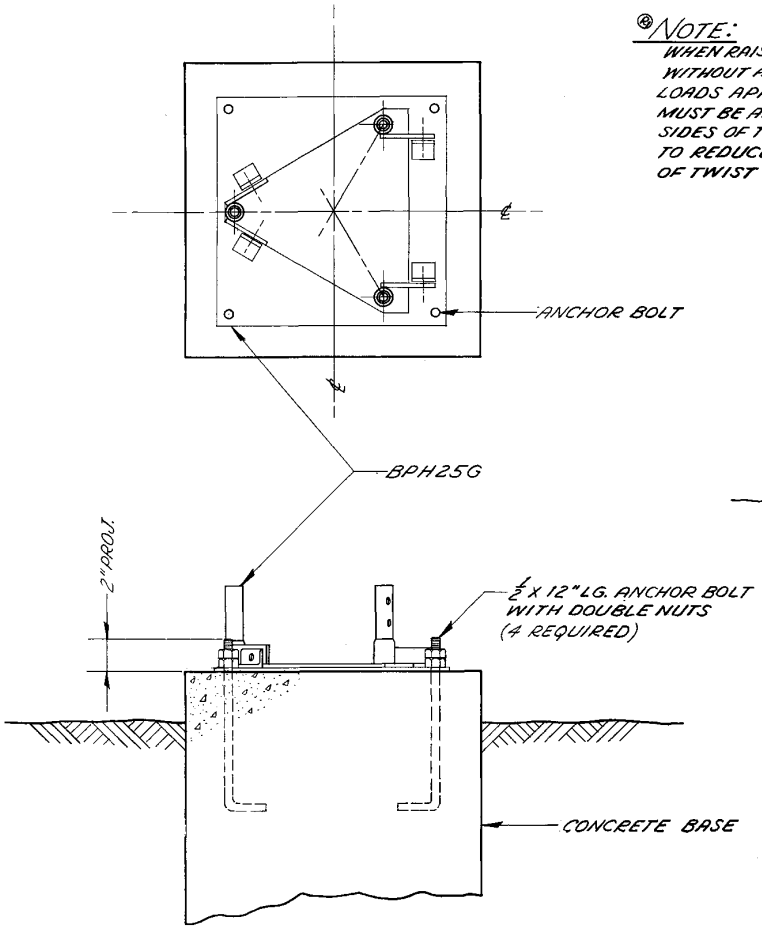

NOTE: TOWERS MOUNTED ON THIS BASE MUST BE BRACKETED OR GUYED

NOTE:
WHEN RAISING & LOWERING TOWER WITHOUT ANTENNA ON HINGE BASE, LOADS APPLIED FOR HINGING TOWER MUST BE APPLIED EQUALLY ON BOTH SIDES OF TOWER IN ORDER TO REDUCE THE POSSIBILITY OF TWIST ON TOWER AT BASE.

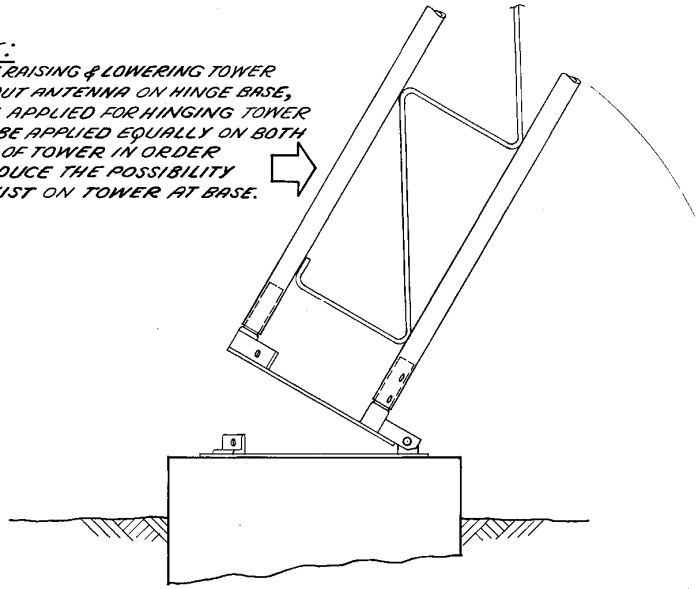

IMPORTANT: BE SURE HINGE BOLTS ARE LOOSENED BEFORE ATTEMPTING TO FOLD TOWER OVER.

NOTE: DUE TO VARIABLES INVOLVED IN ROOF AND OTHER INSTALLATIONS, IT SHALL BE THE CUSTOMER'S OR INSTALLER'S RESPONSIBILITY TO PROVIDE STRUCTURALLY ADEQUATE SUPPORTS FOR PIER & ANCHOR CONNECTIONS. IT MAY ALSO BE NECESSARY FOR THE CUSTOMER OR INSTALLER TO SECURE THE SERVICE OF A LOCAL ENGINEER TO DETERMINE THAT INSTALLATION COMPLIES WITH LOCAL BUILDING CODES.

NO.	DESCRIPTION	DATE	BY
R2	ADDED NOTE	9-17-76	O.H.
R1	REVISED NOTE	8-27-75	O.H.

REVISIONS

ROHN® MANUFACTURING
DIVISION OF GUARDEE

TITLE: BPH25G INSTALLATION

FILE NO.

SCALE ~	MATERIAL	FINISH	WT.
DWN. BY O.H.	DATE 2-12-75	UNLESS OTHERWISE SPECIFIED, DIMENSIONS ARE GIVEN IN INCHES.	
CK'D. BY	DATE 3-20-75	TOLERANCES DEC. ± FRAC. ± ANGLES ±	DWG. NO. C-750112 R2
APP'D. ENGRG. CW	DATE 3-20-75		
APPD. SALES	DATE 3-20-75		

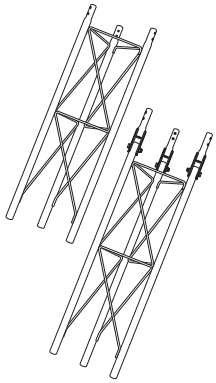

3′4″ Short Base
SB25G
Base section for embedment in concrete.

5′ Short Base (not shown)
SB25G5
Base section for embedment in concrete.

3′4″ Hinged Short Base
SBH25G*
Base section for embedment in concrete. Hinged connection to bottom

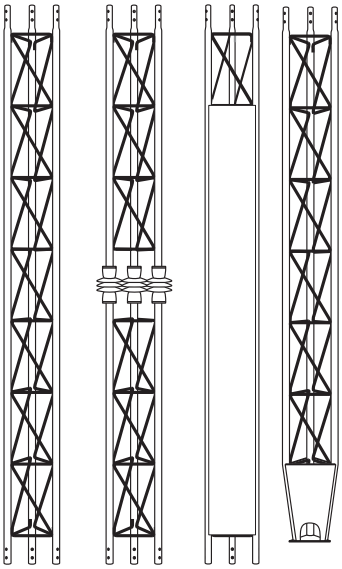

(Left)
Standard 25G Section
25G
Standard 10′ section with seven bays of bracing and swaged, double-bolted connections.
7′ 25G Section
25G7 (not shown)
Same design and materials as 10′ section, but only 7′ long to allow UPS shipping.

(Left Center)
10′ Insulator Section
25RG*

(Right Center)
Anti-Climb Section
25ACL
Used as bottom section to help prevent unauthorized climbers.
Anti-Climb Panels
25ACL3 (not shown)
Three anti-climb panels to bolt to existing standard tower section.

(Right)
Tapered Base
25TGA*
Can be used with RACAL DECCA A4197L base insulator or with 3/4X12PP.

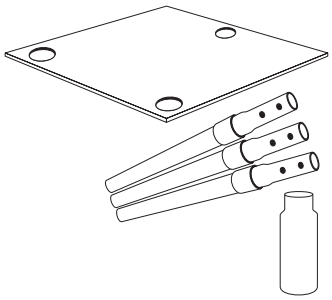

Base Plate
BP25G
For usewith drive rods. Tower must be guyed or bracketed.

2′ Drive Rods
DR25G*
Set of 3 drive rods for use with BP25G base plate.

Drive Tool
DT25
For DR25G/BP25G installation. Slips over top of drive rod to proctect from damage during installation.

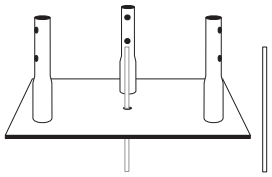

Concrete Base Plate
BPC25G*
For use with pier pin embedded in concrete.

Pier Pin
3/4X12PP
Must be ordered separately.

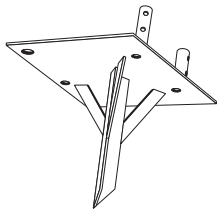

Single Drive-In Base
SDB25G*
To be driven directly into ground.

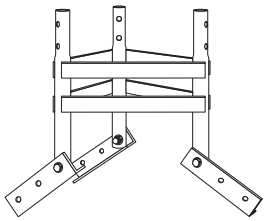

Peak Roof Mount
PR25G*
Adjustable hinged feet conform to nearly any roof pitch. Bolts to roof surface.

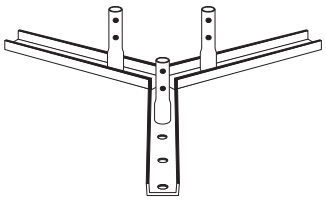

Flat Roof Mount
FR25G*
Bolts directly to flat roof surface

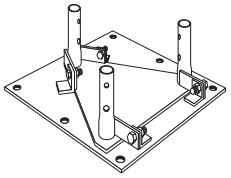

Hinged Base Plate
BPH25G*
Bolts to concrete. Hinged to allow tower to be rotated up from base during installation.
Base Bolts
1/2X12BB
Must be ordered separately.

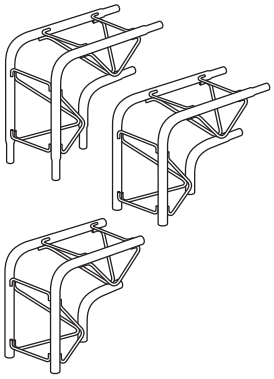

90 Degree Joints
2590MM
2590FM
2590FF
Unique 90 degree joints allows the connection of 25G sections for a variety of purposes. Popular in theatrical staging and overhead lighting.
Joint styles include (2590MM) both ends swaged, (2590FF) both ends open, and (2590FM) a combination one end swaged the other open.
Joints are not drilled where they slip fit to 25G sections. Can be filed drilled or custom connected to meet particular needs.

* Towers mounted on these bases must be bracketed or guyed at all times. Temporary steel guying may also be necessary during installation and dismantling.

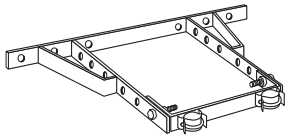	**Adjustable House Bracket** HB25AG0-15″ HB25BG0-24″ (not shown) HB25CG0-36″ (not shown)
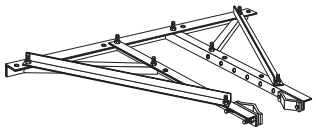	**HeavyDuty Universal House Bracket** HBUTVRO Adjustable to position tower from 18″ to 36″ from wall.
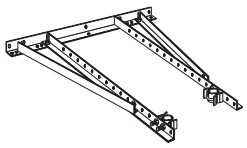	**Universal House Bracket** HBU Adjustable to position tower from 6″ to 30″ from wall.
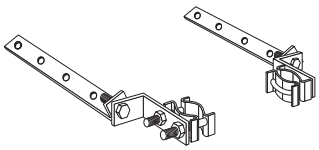	**Universal Eave Bracket** EB2525G Hinged connection allows tower leg clampsto remainperpendicular to ground while bolt-down supports rotate to lay flat along pitched roof or eave.
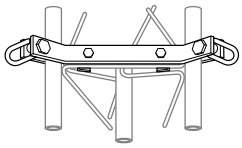	**Guy Bracket** GA25GD Mounts to any tower at any horizontal brace. **Torque Bars** TB25D (not shown) Optional, for use with GA25GD
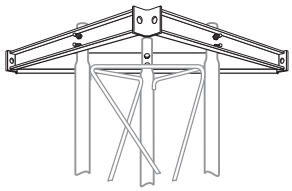	**Torque Arm Stabilizer Assembly** TA25 Anti-twist device located i hte area of antennas. Provides six-way guying. Bolts to tower at any section joint. Attached with joint bolts. Must be installed as sections are joined together.
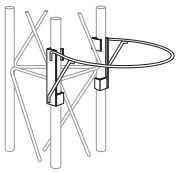	**Safety Ring** SR245 Snaps into place at any level. No bolts required.
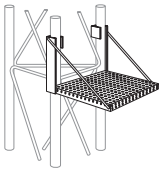	**Work Platform** WP25G Snaps into place at any level. No bolts required.

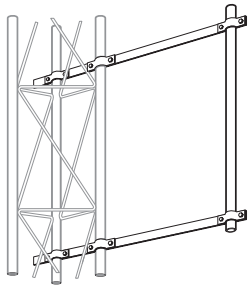	**SIde Arm Bracket** SA253UA Provides3′ stand-off from tower. Distance from top to bottom bracket adjustable depending depending on length of antenna mounting tube. Mounting tube provide is 3′ long, 2-1/4″ O.D.
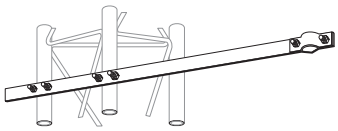	**Side Arm Mount** UHF25G For UHF & FM antennas. Fastens with saddle clamps (shown in SA253UA drawing above).
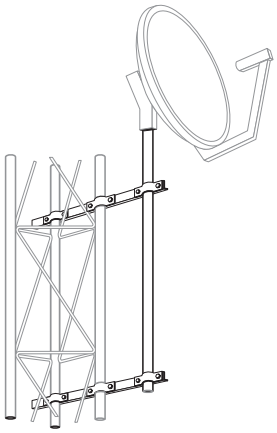	**DBS Antenna Support** KY2068A16 1.66″ O.D. mounting tube KY2068A15 1.5″ O.D. mounting tube KY2068A2 2″ STD/2-3/8″ O.D. mounting pipe Above abbemblies are hot dip galvanized. Antenna Support Assembly includes support brackets, clamps, and mounting pipe. Below assemblies are pregalvanized. DDM166 1.66″ O.D. mounting pipe DDM150 1.5″ O.D. ,ounting pipe DDM238 2″ STD/2-3/8″ O.D. mounitng pipe
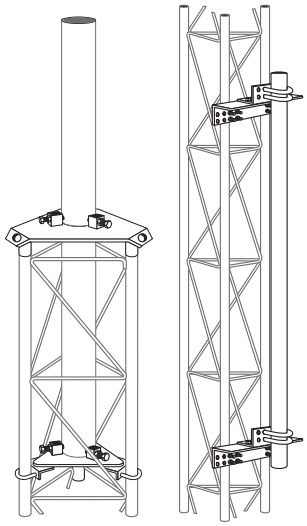	(Left) **Top Dish Mount** 25TDMKD Top plate includes built in guy lugs. Bolts to swaged top of standard section. Lower plate connects with U-bolts. Set screws secure mounting pipe. (See drawing C850314R1) for mast sizes and assembly.) (Right) **Face Dish Mount** DM25G2 Mounting pipe included is 5′ long, 2″ STD.

ROHN™ Products

45G Tower

Products for a Growing World of Technology

Blank

45G TOWER

	Part No.	Description	Wt.
	45G	10′ tower section	70
	45AG	9′ top section	52
⌘	45AG1	Top Section. Mast support tube is 1-1/4″ galv. pipe, threaded on top and projecting 12″ above apex of side rails.	60
	45AG2	Top Section. Mast support tube is 2-3/8″ O.D. tubing, 36″ total length, extending 18″ above apex of side rails.	60
	45AG3	Top Section. Mast support tube is 2-1/4″ O.D. tubing, extending 12″ above apex of side rails. A 2″ O.D. antenna stub will fit snugly inside support tube.	60
	45AG4	7′ top section. Upper end terminates in flat, triangular plate with 3-1/8″ diameter hole in center. Drilled to accept TB3 or TB4 thrust bearing.	52
⌘	45AG5	Top section. Mast support tube is 2-3/4″ O.D. and 2-9/16″ I.D. tubing, 18″ total length.	60
★	45TG	10′ tapered base section (sits on a pier pin - order pier pin separately)	90
★	45TGIA	10′ tapered base section (for use with A4197L base insulator)	114
★	45TGIA47	10′ tapered base section (for use with A4722B base insulator)	114
★	45RG	10′ insulator section for 45G tower (includes 3 # 10470 post insulators)	104
	45ACL	10′ anti-climb section	165
	455ACL3	3 anti-climb metal sheets for attaching to tower section	120
	5545G	20′ adapter section for joining 45G and 55G sections	160
	45JBK	Joint bolt kit	3/4
	APL45G	Beacon plate	17
	SB45G	5′ short base section for use in concrete	35
★	PBC45G	Concrete base plate (sits on pier - order pin separately)	39
★	3/4X12PP	Pier pin (for BPC45G or 45TG - one required)	1
★	BPH45G	Hinged base plate for concrete	80
★	5/8X12BB	Concrete base bolt with double nuts (for BPH45G - four required)	1
★	FR45G	Flat roof mount	34
	AS455G	Accessory shelf. Triangular plate for mounting most popular Ham rotors. Can be drilled if needed.	8
	GA45GD	Guy bracket assembly	23
	TB45D	Torque bars (for use with GA45GD guy bracket) (requires 3 shackles, 3/8″ maximum size - order separately)	10
	3/8S	3/8 shackle	25/100
	HBU	Universal house bracket (6″ to 30″)	15
	HBUTVRO	Universal house bracket (18″ to 36″)	38
	TB50	Tower bushing for 45AG top (1-1/4″ I.D. x 2″ O.D.)	1/2
	TB75	Tower bushing for 45AG top (1-1/2″ I.D. x 2″ O.D.)	1/2
	TB3	Heavy duty thrust bearing, recommended for 2″ O.D. tubing (fits 45AG4 top section)	2-1/2
	TB4	Heavy duty thrust bearing, recommended for 3″ O.D. tubing (fits 45AG4 top section)	3
	BPL45G	Top plate with guy lugs for mounting AB, TB3 or TB4 bearing	17
	SA253UA	Side arm assembly, 2-1/2″ to 3′ extension, with 2-1/4″ support tube	28
	TA45	Torque arm stabilizer assembly	56
	45TDMKD	Top Dish Mount (knock down)	62
	DM45G2	Face dish mount w/2″ (2-3/8″ O.D.) 5′ long standard pipe	52
	DM454	Face dish mount w/4″ (4-1/2″ O.D.) 5′ long standard pipe	88
	WP45G	Work platform	14
	SR245	Safety ring	8
	EF2545	Aluminum erection fixture, 12′ long (fits all models with 1-1/4″ side rails) (Use only to raise one 10′ section or any part of a section at one time. Not intended to be used for lifting individuals)	20
	P2545	Pole only for EF2545	12
	H2545	Head only for EF2545	8

Note: The price on #45 and #5545G sections will be higher on shipments to the following states: Arizona, California, Colorado, Idaho, Montana, Nevada, Oregon, Utah, Washington, and Wyoming.

⌘ Available by special order only.
★ Towers mounted on this base must be bracketed or guyed at all times.
✦ This item is not to be used without proper design consideration.

Refer to alphabetical/numerical price list for current prices.
F.O.B. Peoria, Illinois
Specifications subject to change without notice.

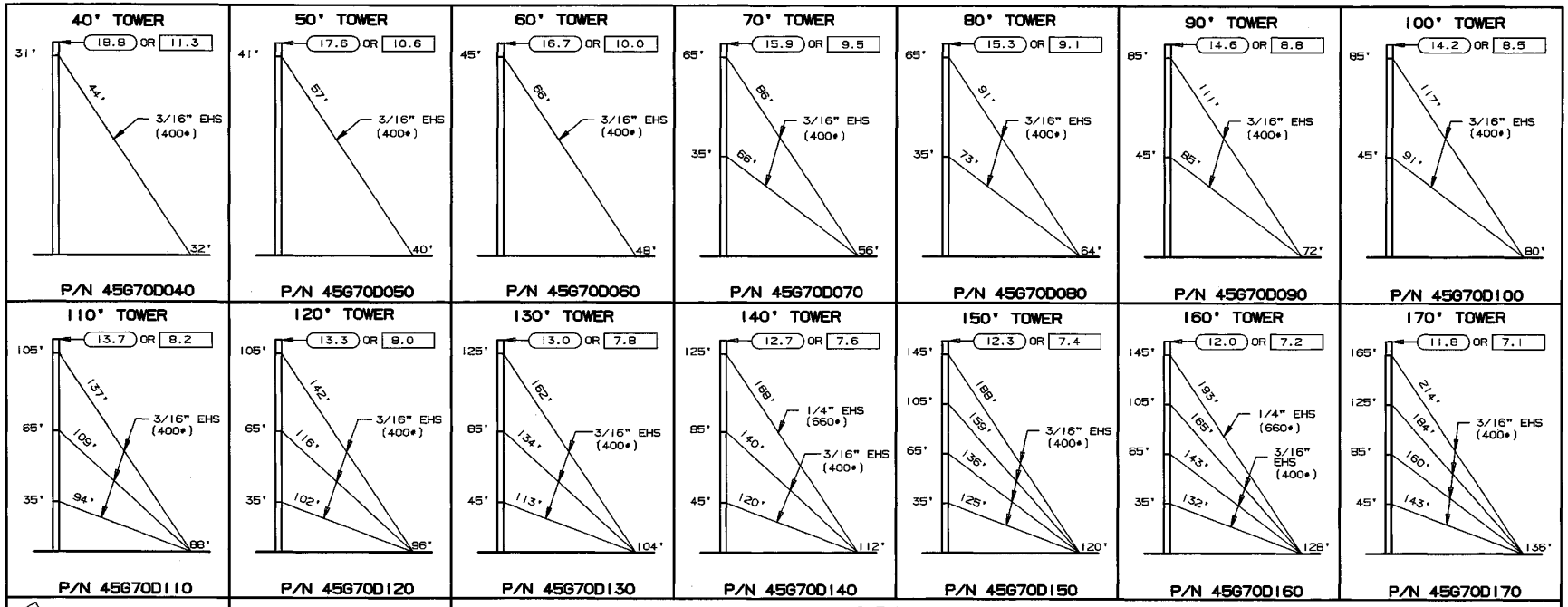

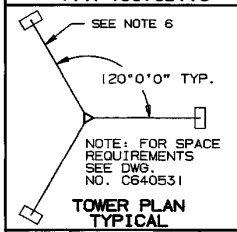

TOWER PLAN TYPICAL

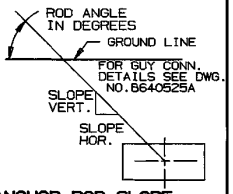

ANCHOR ROD SLOPE

GENERAL NOTES

1. TOWER DESIGNS ARE IN ACCORDANCE WITH APPROVED NATIONAL STANDARD ANSI/EIA-222-E-1991 (NO ICE).
2. ▭ ALLOWABLE PROJ. AREA (SQ. FT.) FOR ROUND MEMBER ANTENNAS. ▭ ALLOWABLE PROJ. AREA (SQ. FT.) FOR FLAT MEMBER ANTENNAS. EQUIVALENT FLAT-PLATE ANTENNA AREAS, BASED ON EIA RS-222-C, MUST NOT EXCEED THE AREAS SHOWN FOR FLAT MEMBER ANTENNAS.
3. TOWER DESIGNS INCLUDE THREE SIDE ARMS, SYMMETRICALLY PLACED, HAVING A TOTAL EFFECTIVE PROJECTED AREA EQUAL TO 8.0 SQUARE FEET. FOR SIDE ARM DETAILS (P/N SA253UA). SEE DWG. C821662 LATEST REVISION.
4. DESIGNS ASSUME ONE 1/2" & ONE 7/8" DIA. LINE ON EACH TOWER FACE.
5. ANCHOR RADIUS IS FROM TOWER BASE TO INTERSECTION OF ROD WITH GROUND.
6. FOR GUY HARDWARE INSTALLATION DETAILS SEE DWG. A871382.
7. TOWER DESIGNS AND GUY CHORD LENGTHS SHOWN ARE BASED ON LEVEL GROUND. ADD 6 PERCENT TO CHORD LENGTHS (FOR SAG AND CONNECTIONS) FOR FINAL CUT LENGTHS. ( ) INDICATES INITIAL TENSION FOR GUY WIRES IN POUNDS AT 60 DEGREES FAHRENHEIT.
8. DO NOT INSTALL OR DISMANTLE TOWERS WITHIN FALLING DISTANCE OF ELECTRICAL AND/OR TELEPHONE LINES.
9. TOWER ERECTION AND DISMANTLING MUST BE BY QUALIFIED AND EXPERIENCED PERSONNEL.
10. TEMPORARY STEEL GUYS, WHEN REQUIRED DURING ERECTION OR DISMANTLING, MUST BE SUPPLIED AND INSTALLED BY THE ERECTOR.
11. INSTALL WARNING PLATE (P/N ACWS) IN A HIGHLY VISIBLE LOCATION.
12. ALL ANTENNA INSTALLATIONS MUST BE GROUNDED IN ACCORDANCE WITH LOCAL AND NATIONAL CODES.
13. EXTRA CABLE CLAMPS HAVE BEEN PROVIDED FOR TURNBUCKLE SAFETY REQUIREMENTS. FOR DETAILS SEE DWG. B680324 LATEST REVISION.
14.

TOWER HT.	BASE PIER REF. DWG. C610621 NO.	BASE PIER REAC. LBS.	ANCHOR DATA REF. DWG.: BLOCK-C620643; ROD-C660415 BLOCK NO.	ROD NO.	ROD ANGLE	SLOPE HOR.	SLOPE VERT.	REAC. LBS. HOR.	REAC. LBS. VERT.
40'	CB2	2,580	4A	GAR30	44.5	12	11.8	1,040	1,020
50'	CB2	2,820	4A	GAR30	45.9	11.6	12.0	1,080	1,120
60'	CB2	3,080	4A	GAR30	43.3	12	11.3	1,270	1,190
70'	CB2	3,470	4A	GAC303	42.9	12	11.2	1,480	1,380
80'	CB2	3,830	4A	GAC303	40.9	12	10.4	1,710	1,490
90'	CB2	4,040	4A	GAC303	43.0	12	11.2	1,700	1,590
100'	CB2	4,310	4A	GAC303	41.8	12	10.7	1,860	1,660
110'	CB2	4,930	4A	GAC303	39.7	12	10.0	2,290	1,900
120'	CB2	5,240	4A	GAC303	38.8	12	9.6	2,440	1,960
130'	CB2	5,540	4A	GAC303	40.3	12	10.2	2,540	2,150
140'	CB2	6,020	4A	GAC303	40.0	12	10.1	2,830	2,380
150'	CB2	6,460	4A	GAC305	38.0	12	9.4	3,200	2,500
160'	CB2	6,970	4A	GAC305	37.8	12	9.3	3,550	2,750
170'	CB2	7,110	4A	GAC305	38.7	12	9.6	3,520	2,820

No.	Revision Description	Date	Rev. By	Ckd By	Appd By
R2	REV'D GEN.NOTES WAS REV-D; NOW REV-E	1-27-92	RKB	EL	TS
R1	REV'D ANC RODS & NOTES; UPDATED	10-2-87	GPW		

R O H N

Scale: NONE	By	Date
Drawn:	WDU	9-1-87
Checked:	WRF	4-20-87
App. Eng.:	RAM	4-20-87
App. Sales:	AE	2-12-88

Title: GUYING DETAILS FOR 40'-170' 45G TOWER 70 MPH BASIC WIND SPEED (NO ICE)

ENG. FILE:

DRAWING NO.: C870401 R2

Parts List P-590
(Replaces P-560)

January 1, 1995

Parts List for #45G Guyed Towers

70 MPH Basic Wind Speed (No Ice)

Tower Height

Part Number	40'	50'	60'	70'	80'	90'	100'	110'	120'	130'	140'	150'	160'	170'
45G	3	4	5	6	7	8	9	10	11	12	13	14	15	16
45AG2	1	1	1	1	1	1	1	1	1	1	1	1	1	1
BPC45G with 3/4X12PP	1	1	1	1	1	1	1	1	1	1	1	1	1	1
SA253UA	3	3	3	3	3	3	3	3	3	3	3	3	3	3
GA45GD	1	1	1	2	2	2	2	3	3	3	3	4	4	4
3/16EHS	150'	200'	225'	500'	525'	625'	675'	1100'	1150'	1325'	850'	1950'	1400'	2325'
1/4EHS											550'		625'	
BG2142	6	6	6	12	12	12	12	18	18	18	12	24	18	24
BG2144											6		6	
5/16THH	6	6	6	12	12	12	12	18	18	18	12	24	18	24
3/8THH											6		6	
3/8TBE&E				6	6	6	6	9	9	9	6	12	9	12
1/2TBE&E											3		3	
5/8TBE&J	3	3	3											
1/4CCM											6		6	
TBSAFETY	3	3	3	3	3	3	3	3	3	3		3		3
GAR30	3	3	3											
GAC303				3	3	3	3	3	3	3	3			
GAC305												3	3	3
AGKE	1	1	1	1	1	1	1	1	1	1	1	1	1	1
340028	3	3	3	6	6	6	6	9	9	9	9	12	12	12
BGKE	2	2	2	2	2	2	2	2	2	2	2	2	2	2

Items shown above are necessary for complete "ground" guyed towers. (**Note:** Local engineers must be consulted to determine adequate base and anchor details and wind loading criteria for all roof type installations.)

Anchor grounding (AGKE) and base grounding (BGKE), as recommended by EIA, are included with the tower material. However, extra copper wire may be required for roof installations. See appropriate sheet for grounding material and order extra copper wire as a separate item.

Installation information and a safety package (part number ACWS) are also included with the tower material. This package consists of one anti-climb warning sign and two Danger - Watch for Wires labels along with other printed safety information.

All types of antenna installations should be thoroughly inspected by qualified personnel and re-marked with hazard and warning labels at least twice a year to insure safety and proper performance.

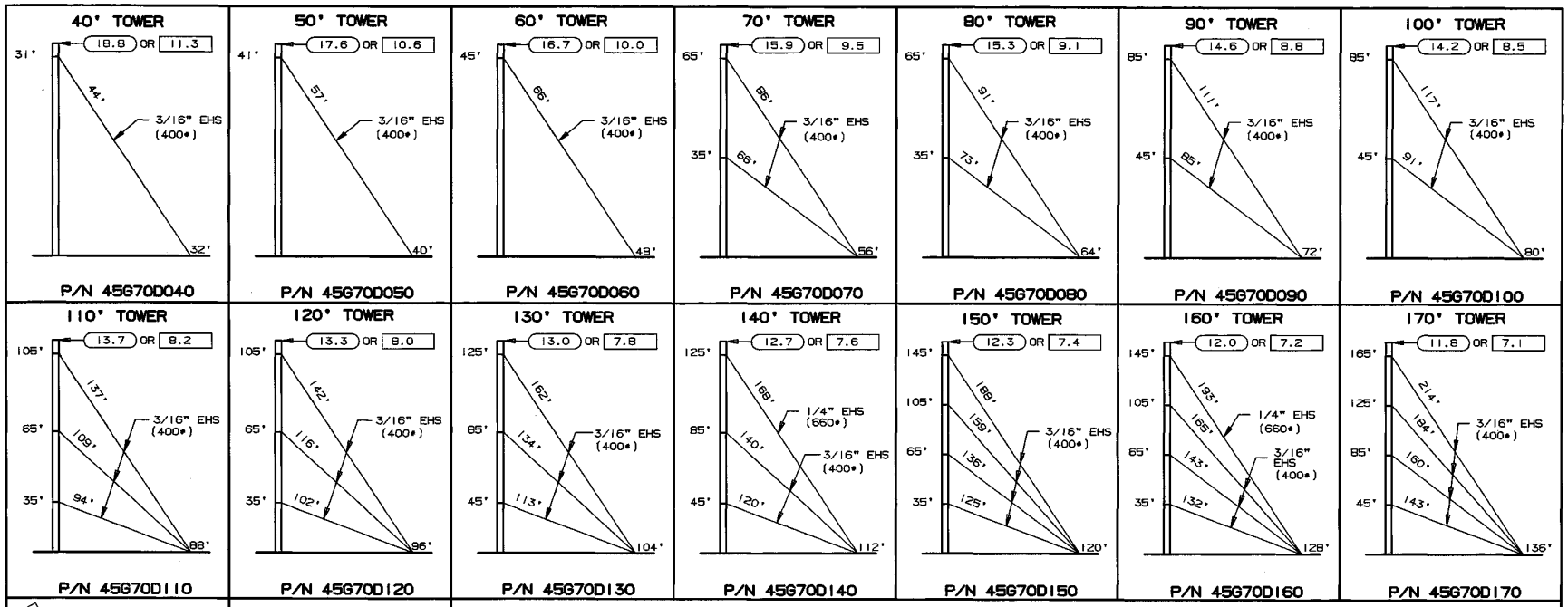

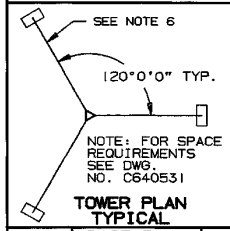

TOWER PLAN TYPICAL

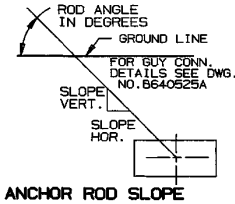

ANCHOR ROD SLOPE

GENERAL NOTES

1. TOWER DESIGNS ARE IN ACCORDANCE WITH APPROVED NATIONAL STANDARD ANSI/EIA-222-E-1991 (NO ICE).
2. ▭ ALLOWABLE PROJ. AREA (SQ. FT.) FOR ROUND MEMBER ANTENNAS. ▭ ALLOWABLE PROJ. AREA (SQ. FT.) FOR FLAT MEMBER ANTENNAS.
3. EQUIVALENT FLAT-PLATE ANTENNA AREAS, BASED ON EIA RS-222-C, MUST NOT EXCEED THE AREAS SHOWN FOR FLAT MEMBER ANTENNAS.
4. TOWER DESIGNS INCLUDE THREE SIDE ARMS, SYMMETRICALLY PLACED, HAVING A TOTAL EFFECTIVE PROJECTED AREA EQUAL TO 8.0 SQUARE FEET. FOR SIDE ARM DETAILS (P/N SA253UA). SEE DWG. C821662 LATEST REVISION.
5. DESIGNS ASSUME ONE 1/2" & ONE 7/8" DIA. LINE ON EACH TOWER FACE.
6. ANCHOR RADIUS IS FROM TOWER BASE TO INTERSECTION OF ROD WITH GROUND.
7. FOR GUY HARDWARE INSTALLATION DETAILS SEE DWG. A871382.
8. TOWER DESIGNS AND GUY CHORD LENGTHS SHOWN ARE BASED ON LEVEL GROUND. ADD 6 PERCENT TO CHORD LENGTHS (FOR SAG AND CONNECTIONS) FOR FINAL CUT LENGTHS. [ ] INDICATES INITIAL TENSION FOR GUY WIRES IN POUNDS AT 60 DEGREES FAHRENHEIT.
9. DO NOT INSTALL OR DISMANTLE TOWERS WITHIN FALLING DISTANCE OF ELECTRICAL AND/OR TELEPHONE LINES.
10. TOWER ERECTION AND DISMANTLING MUST BE BY QUALIFIED AND EXPERIENCED PERSONNEL.
11. TEMPORARY STEEL GUYS, WHEN REQUIRED DURING ERECTION OR DISMANTLING, MUST BE SUPPLIED AND INSTALLED BY THE ERECTOR.
12. INSTALL WARNING PLATE (P/N ACWS) IN A HIGHLY VISIBLE LOCATION.
13. ALL ANTENNA INSTALLATIONS MUST BE GROUNDED IN ACCORDANCE WITH LOCAL AND NATIONAL CODES.
14. EXTRA CABLE CLAMPS HAVE BEEN PROVIDED FOR TURNBUCKLE SAFETY REQUIREMENTS. FOR DETAILS SEE DWG. B680324 LATEST REVISION.

TOWER HT.	BASE PIER REF. DWG. C610621		ANCHOR DATA REF. DWG.: BLOCK-C620643; ROD-C660415						
	NO.	REAC. LBS.	BLOCK NO.	ROD NO.	ROD ANGLE	SLOPE HOR.	SLOPE VERT.	REAC. LBS. HOR.	REAC. LBS. VERT.
40'	CB2	2,580	4A	GAR30	44.5	12	11.8	1,040	1,020
50'	CB2	2,820	4A	GAR30	45.9	11.6	12.0	1,080	1,120
60'	CB2	3,080	4A	GAR30	43.3	12	11.3	1,270	1,190
70'	CB2	3,470	4A	GAC303	42.9	12	11.2	1,480	1,380
80'	CB2	3,830	4A	GAC303	40.9	12	10.4	1,710	1,490
90'	CB2	4,040	4A	GAC303	43.0	12	11.2	1,700	1,590
100'	CB2	4,310	4A	GAC303	41.8	12	10.7	1,860	1,660
110'	CB2	4,930	4A	GAC303	39.7	12	10.0	2,290	1,900
120'	CB2	5,240	4A	GAC303	38.8	12	9.6	2,440	1,960
130'	CB2	5,540	4A	GAC303	40.3	12	10.2	2,540	2,150
140'	CB2	6,020	4A	GAC303	40.0	12	10.1	2,830	2,380
150'	CB2	6,460	4A	GAC305	38.0	12	9.4	3,200	2,500
160'	CB2	6,970	4A	GAC305	37.8	12	9.3	3,550	2,750
170'	CB2	7,110	4A	GAC305	38.7	12	9.6	3,520	2,820

No.	Revision Description	Date	Rev By	Ckd By	Appd By
R2	REV'D GEN. NOTES WAS REV-D; NOW REV-E	1-27-92	RKB	EL	TS
R1	REV'D ANC RODS & NOTES; UPDATED	10-2-87	GPW		

ROHN

Scale: NONE	By	Date
Drawn:	WDU	9-1-87
Checked:	WRF	4-20-87
App. Eng.:	RAM	4-20-87
App. Sales:	AE	2-12-88

Title: GUYING DETAILS FOR 40'-170' 45G TOWER 70 MPH BASIC WIND SPEED (NO ICE)

ENG. FILE:

DRAWING NO.: C870401 R2

Parts List P-590
(Replaces P-560)

January 1, 1995

Parts List for #45G Guyed Towers

70 MPH Basic Wind Speed (No Ice)

Tower Height

Part Number	40'	50'	60'	70'	80'	90'	100'	110'	120'	130'	140'	150'	160'	170'
45G	3	4	5	6	7	8	9	10	11	12	13	14	15	16
45AG2	1	1	1	1	1	1	1	1	1	1	1	1	1	1
BPC45G with 3/4X12PP	1	1	1	1	1	1	1	1	1	1	1	1	1	1
SA253UA	3	3	3	3	3	3	3	3	3	3	3	3	3	3
GA45GD	1	1	1	2	2	2	2	3	3	3	3	4	4	4
3/16EHS	150'	200'	225'	500'	525'	625'	675'	1100'	1150'	1325'	850'	1950'	1400'	2325'
1/4EHS											550'		625'	
BG2142	6	6	6	12	12	12	12	18	18	18	12	24	18	24
BG2144											6		6	
5/16THH	6	6	6	12	12	12	12	18	18	18	12	24	18	24
3/8THH											6		6	
3/8TBE&E				6	6	6	6	9	9	9	6	12	9	12
1/2TBE&E											3		3	
5/8TBE&J	3	3	3											
1/4CCM											6		6	
TBSAFETY	3	3	3	3	3	3	3	3	3	3		3		3
GAR30	3	3	3											
GAC303				3	3	3	3	3	3	3	3			
GAC305												3	3	3
AGKE	1	1	1	1	1	1	1	1	1	1	1	1	1	1
340028	3	3	3	6	6	6	6	9	9	9	9	12	12	12
BGKE	2	2	2	2	2	2	2	2	2	2	2	2	2	2

Items shown above are necessary for complete "ground" guyed towers. (**Note:** Local engineers must be consulted to determine adequate base and anchor details and wind loading criteria for all roof type installations.)

Anchor grounding (AGKE) and base grounding (BGKE), as recommended by EIA, are included with the tower material. However, extra copper wire may be required for roof installations. See appropriate sheet for grounding material and order extra copper wire as a separate item.

Installation information and a safety package (part number ACWS) are also included with the tower material. This package consists of one anti-climb warning sign and two Danger - Watch for Wires labels along with other printed safety information.

All types of antenna installations should be thoroughly inspected by qualified personnel and re-marked with hazard and warning labels at least twice a year to insure safety and proper performance.

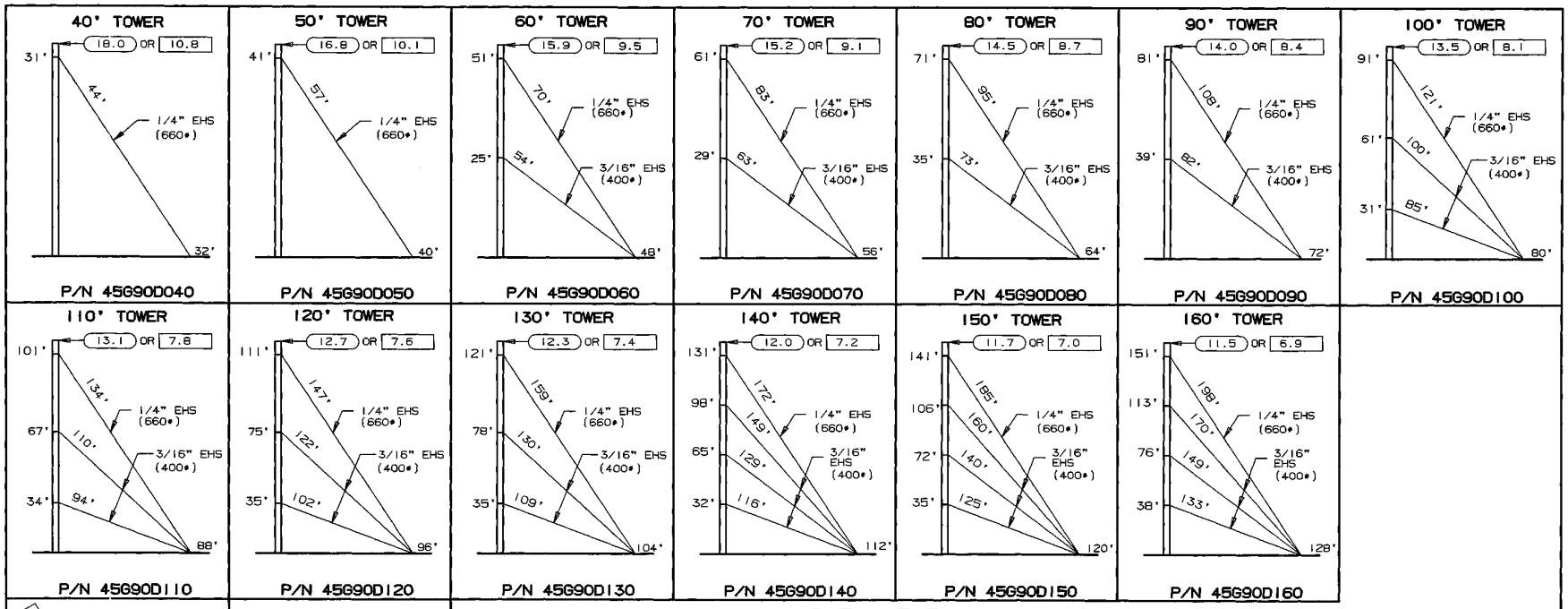

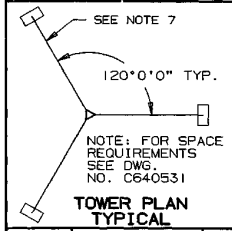

TOWER PLAN TYPICAL

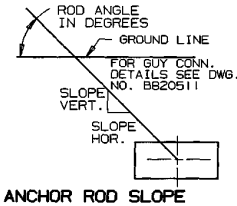

ANCHOR ROD SLOPE

GENERAL NOTES

1. TOWER DESIGN IN ACCORDANCE WITH APPROVED NATIONAL STANDARD ANSI/EIA-222-E-1991 (NO ICE)
2. ▭ ALLOWABLE PROJ. AREA (SQ. FT.) FOR ROUND MEMBER ANTENNAS. ▭ ALLOWABLE PROJ. AREA (SQ. FT.) FOR FLAT MEMBER ANTENNAS.
3. EQUIVALENT FLAT-PLATE ANTENNA AREAS, BASED ON EIA RS-222-C, MUST NOT EXCEED THE AREAS SHOWN FOR FLAT MEMBERS ANTENNAS.
4. TOWER DESIGNS INCLUDE THREE SIDE ARMS, SYMMETRICALLY PLACED, HAVING A TOTAL EFFECTIVE PROJECTED AREA EQUAL TO 8.0 SQUARE FEET. FOR SIDE ARM DETAILS (P/N SA253UA). SEE DWG. C821662 LATEST REVISION.
5. DESIGN ASSUME ONE 1/2" & 7/8"DIA. LINES ON EACH TOWER FACE.
6. TOWER DESIGNS, 200 FEET AND OVER, INCLUDE 2.0 SQUARE FEET OF EFFECTIVE PROJECTED AREA FOR A BEACON (DEDUCT ONE 7/8" LINE FOR BEACON.)
7. ANCHOR RADIUS IS FROM TOWER BASE TO INTERSECTION OF ROD WITH GROUND.
8. TOWER DESIGNS AND GUY CHORD LENGTHS SHOWN ARE BASED ON LEVEL GROUND. ADD 6 PERCENT TO CHORD LENGTHS (FOR SAG AND CONNECTIONS) FOR FINAL CUT LENGTHS. ( ) INDICATES INITIAL TENSION FOR GUY WIRES IN POUNDS AT 60 DEGREES FAHRENHEIT.
9. DO NOT INSTALL OR DISMANTLE TOWERS WITHIN FALLING DISTANCE OF ELECTRICAL AND/OR TELEPHONE LINES.
10. TOWER ERECTION AND DISMANTLING MUST BE BY QUALIFIED AND EXPERIENCED PERSONNEL.
11. TEMPORARY STEEL GUYS, WHEN REQUIRED DURING ERECTION OR DISMANTLING, MUST BE SUPPLIED AND INSTALLED BY THE ERECTOR.
12. INSTALL WARNING PLATE (P/N ACWS) IN A HIGHLY VISIBLE LOCATION.
13. ALL ANTENNA INSTALLATIONS MUST BE GROUNDED IN ACCORDANCE WITH LOCAL AND NATIONAL CODES.
14. EXTRA CABLE CLAMPS HAVE BEEN PROVIDED FOR TURNBUCKLE SAFETY REQUIREMENTS. FOR DETAILS SEE DWG. B680324 LATEST REVISION.
15. FOR GUY HARDWARE INSTALLATION DETAILS SEE DWG. A871382.

TOWER HT.	BASE PIER REF. DWG. C810621		ANCHOR DATA REF. DWG.: BLOCK-C620643; ROD-C660415						
	NO.	REAC. LBS.	BLOCK NO.	ROD NO.	ROD ANGLE	SLOPE HOR.	SLOPE VERT.	REAC. LBS. HOR.	REAC. LBS. VERT.
40'	CB2	3,730	4A	GAR30	44.5	12	11.8	1,710	1,680
50'	CB2	4,070	4A	GAR30	45.9	11.6	12.0	1,780	1,840
60'	CB2	4,590	4A	GAC303	42.5	12	11.0	2,260	2,070
70'	CB2	4,940	4A	GAC303	42.8	12	11.1	2,400	2,220
80'	CB2	5,380	4A	GAC303	43.1	12	11.2	2,560	2,390
90'	CB2	5,740	4A	GAC303	43.0	12	10.1	2,720	2,530
100'	CB2	6,490	4A	GAC303	40.8	12	10.4	3,280	2,840
110'	CB2	6,930	4A	GAC303	40.7	12	10.3	3,560	3,060
120'	CB2	7,260	4A	GAC345501	40.3	12	10.2	3,770	3,210
130'	CB2	7,680	4A	GAC345501	39.8	12	10.0	4,020	3,360
140'	CB2	8,540	4B	GAC345501	39.0	12	9.7	4,700	3,810
150'	CB2	8,990	4B	GAC345501	39.0	12	9.7	4,950	4,010
160'	CB2	9,490	4B	GAC345501	39.0	12	9.7	5,230	4,230

No.	Revision Description	Date	Rev By	Ckd By	Appd By
R1	REV'D EIA-222-D TO EIA-222-E	9-10-91	RKB	J	TS

ROHN

Scale: NONE	By	Date
Drawn:	GPW	9-1-87
Checked:	WRF	9-30-87
App. Eng.:	RAM	10-1-87
App. Sales:	AE	2-12-88

Title: GUYING DETAILS FOR 40'-160' 45G TOWERS 90 MPH BASIC WIND SPEED (NO ICE)

ENG. FILE:

DRAWING NO.: C870478 R1

Parts List P-592
(Replaces P-569)

January 1, 1995

Parts List for #45G Guyed Towers

90 MPH Basic Wind Speed (No Ice)

	Tower Height												
Part Number	40'	50'	60'	70'	80'	90'	100'	110'	120'	130'	140'	150'	160'
45G	3	4	5	6	7	8	9	10	11	12	13	14	15
45AG2	1	1	1	1	1	1	1	1	1	1	1	1	1
BPC45G with 3/4X12PP	1	1	1	1	1	1	1	1	1	1	1	1	1
SA253UA	3	3	3	3	3	3	3	3	3	3	3	3	3
GA45GD	1	1	2	2	2	2	3	3	3	3	4	4	4
3/16EHS			175'	225'	250'	275'	600'	650'	725'	775'	1275'	1375'	1450'
1/4EHS	150'	200'	225'	275'	325'	350'	400'	450'	500'	525'	550'	600'	650'
BG2142			6	6	6	6	12	12	12	12	18	18	18
BG2144	6	6	6	6	6	6	6	6	6	6	6	6	6
5/16THH			6	6	6	6	12	12	12	12	18	18	18
3/8THH	6	6	6	6	6	6	6	6	6	6	6	6	6
3/8TBE&E			3	3	3	3	6	6					
1/2TBE&E			3	3	3	3	3	3					
1/2TBE&J									9	9	12	12	12
5/8TBE&J	3	3											
TBSAFETY	3	3	3	3	3	3	3	3	3	3	3	3	3
GAR30	3	3											
GAC303			3	3	3	3	3	3					
GAC345501									3	3	3	3	3
AGKE	1	1	1	1	1	1	1	1	1	1	1	1	1
340028	6	6	6	6	6	6	9	9	9	9	12	12	12
BGKE	2	2	2	2	2	2	2	2	2	2	2	2	2

Items shown above are necessary for complete "ground" guyed towers. (**Note:** Local engineers must be consulted to determine adequate base and anchor details and wind loading criteria for all roof type installations.)

Anchor grounding (AGKE) and base grounding (BGKE), as recommended by EIA, are included with the tower material. However, extra copper wire may be required for roof installations. See appropriate sheet for grounding material and order extra copper wire as a separate item.

Installation information and a safety package (part number ACWS) are also included with the tower material. This package consists of one anti-climb warning sign and two Danger - Watch for Wires labels along with other printed safety information.

All types of antenna installations should be thoroughly inspected by qualified personnel and re-marked with hazard and warning labels at least twice a year to insure safety and proper performance.

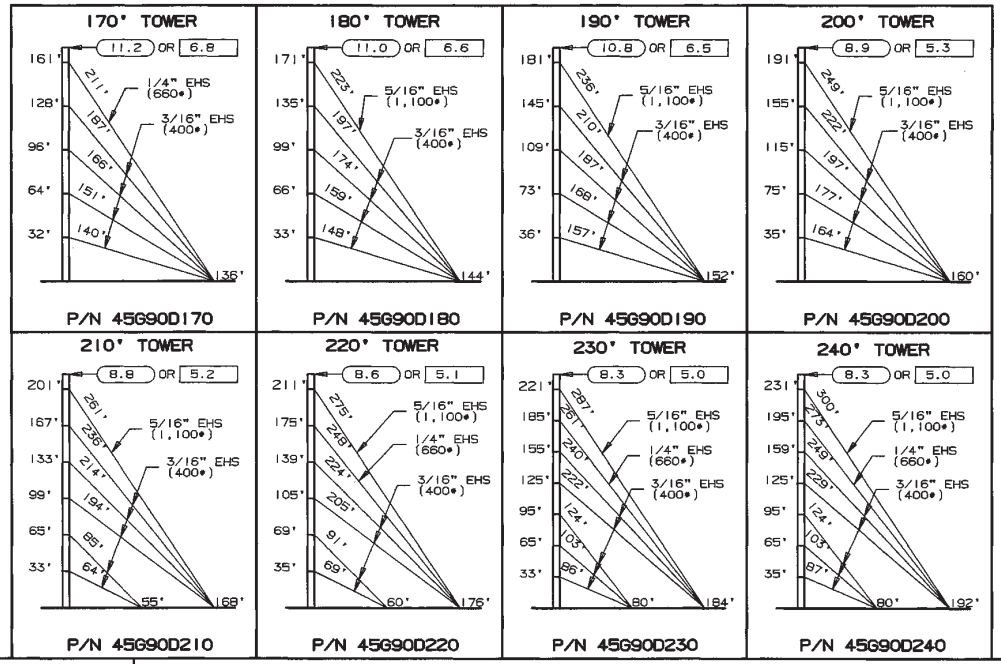

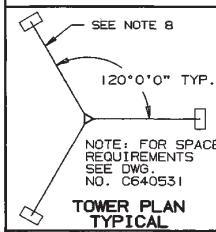

TOWER PLAN TYPICAL

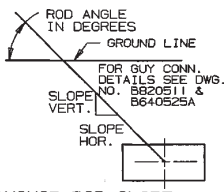

ANCHOR ROD SLOPE

GENERAL NOTES

1. TOWER DESIGNS ARE IN ACCORDANCE WITH APPROVED NATIONAL STANDARD ANSI/EIA-222-E-1991 (NO ICE).
2. ▭ ALLOWABLE PROJ. AREA (SQ. FT.) FOR ROUND MEMBER ANTENNAS. ▭ ALLOWABLE PROJ. AREA (SQ. FT.) FOR FLAT MEMBER ANTENNAS.
3. EQUIVALENT FLAT-PLATE ANTENNA AREAS, BASED ON EIA RS-222-C, MUST NOT EXCEED THE AREAS SHOWN FOR FLAT MEMBER ANTENNAS.
4. TOWER DESIGNS INCLUDE THREE SIDE ARMS, SYMMETRICALLY PLACED, HAVING A TOTAL EFFECTIVE PROJECTED AREA EQUAL TO 8.0 SQUARE FEET. FOR SIDE ARM DETAILS (P/N SA253UA). SEE DWG. C821662 LATEST REVISION.
5. DESIGNS ASSUME ONE 1/2" & ONE 7/8" DIA. LINE ON EACH TOWER FACE.
6. ANCHOR RADIUS IS FROM TOWER BASE TO INTERSECTION OF ROD WITH GROUND.
7. FOR GUY HARDWARE INSTALLATION DETAILS SEE DWG. A871382.
8. TOWER DESIGNS AND GUY CHORD LENGTHS SHOWN ARE BASED ON LEVEL GROUND. ADD 6 PERCENT TO CHORD LENGTHS (FOR SAG AND CONNECTIONS) FOR FINAL CUT LENGTHS. ( ) INDICATES INITIAL TENSION FOR GUY WIRES IN POUNDS AT 60 DEGREES FAHRENHEIT.
9. DO NOT INSTALL OR DISMANTLE TOWERS WITHIN FALLING DISTANCE OF ELECTRICAL AND/OR TELEPHONE LINES.
10. TOWER ERECTION AND DISMANTLING MUST BE BY QUALIFIED AND EXPERIENCED PERSONNEL.
11. TEMPORARY STEEL GUYS, WHEN REQUIRED DURING ERECTION OR DISMANTLING, MUST BE SUPPLIED AND INSTALLED BY THE ERECTOR.
12. INSTALL WARNING PLATE (P/N ACWS) IN A HIGHLY VISIBLE LOCATION.
13. ALL ANTENNA INSTALLATIONS MUST BE GROUNDED IN ACCORDANCE WITH LOCAL AND NATIONAL CODES.
14. EXTRA CABLE CLAMPS HAVE BEEN PROVIDED FOR TURNBUCKLE SAFETY REQUIREMENTS. FOR DETAILS SEE DWG. B680324 LATEST REVISION.
15. TOWER DESIGNS , 200 FEET AND OVER , INCLUDE 2.0 SQUARE FEET OF EFFECTIVE PROJECTED AREA FOR A BEACON (DEDUCT ONE 7/8" LINE OF BEACON).

TOWER HT.	BASE PIER REF. DWG. C610621		INNER ANCHOR DATA REF. DWG.: BLOCK-C620643; ROD-C660415							OUTER ANCHOR DATA REF. DWG.: BLOCK-C620643; ROD-C660415						
	NO.	REAC. LBS.	BLOCK NO.	ROD NO.	ROD ANGLE	SLOPE HOR.	SLOPE VERT.	REAC. LBS. HOR.	REAC. LBS. VERT.	BLOCK NO.	ROD NO.	ROD ANGLE	SLOPE HOR.	SLOPE VERT.	REAC. LBS. HOR.	REAC. LBS. VERT.
170'	CB2	10,420	4C	GAC3455	37.9	12	9.4	6,050	4,720							
180'	CB2	11,290	4D	GAC3455	38.4	12	9.5	6,600	5,230							
190'	CB2	11,990	4D	GAC3455	38.4	12	9.5	7,000	5,560							
200'	CB2	12,480	4D	GAC3455	38.2	12	9.5	7,310	5,760							
210'	CB2	14,860	4A	GAC303	41.3	12	10.5	1,550	1,360	4D	GAC3455	42.8	12	11.1	6,170	5,710
220'	CB2	15,990	4A	GAC303	40.6	12	10.3	1,650	1,410	4E	GAC3455	42.8	12	11.1	6,690	6,200
230'	CB2	17,350	4A	GAC303	38.3	12	9.5	2,490	1,970	4E	GAC3455	43.6	12	11.4	6,670	6,360
240'	CB2	17,450	4A	GAC303	38.7	12	9.6	2,400	1,930	4E	GAC3455	43.3	12	11.3	7,000	6,610

No.	Revision Description	Date	Rev By	Ckd By	Appd By
R1	REV.D GEN. NOTES WAS REV-D :NOW REV-E	4-6-92	RKB	WDU	TS

ROHN

Scale: NONE	By	Date
Drawn:	GPW/WDU	9-1-87
Checked:	WRF/WDU	9-30-87
App. Eng.:	RAM	10-1-87
App. Sales:	AE	2-12-88

Title: GUYING DETAILS FOR 170'-240' 45G TOWER 90 MPH BASIC WIND SPEED (NO ICE)

ENG. FILE:

DRAWING NO.: C870479 R1

Parts List P-593
(Replaces P-586)

January 1, 1995

Parts List for #45G Guyed Towers

90 MPH Basic Wind Speed (No Ice)

Tower Height

Part Number	170'	180'	190'	200'	210'	220'	230'	240'
45G	16	17	18	20	21	22	23	24
45AG2	1	1	1					
BPC45G with 3/4X12PP	1	1	1	1	1	1	1	1
APL45G				1	1	1	1	1
SA253UA	3	3	3	3	3	3	3	3
GA45GD	5	5	5	5	6	6	7	7
3/16EHS	2150'	2175'	2350'	2425'	2575'	1875'	2500'	2600'
1/4EHS	675'					800'	850'	875'
5/16EHS		725'	775'	800'	850'	875'	925'	1000'
BG2142	24	24	24	24	30	24	30	30
BG2144	6					6	6	6
BG2146		6	6	6	6	6	6	6
5/16THH	24	24	24	24	30	24	30	30
3/8THH	6					6	6	6
7/16THH		6	6	6	6	6	6	6
3/8TBE&E					6	6	9	9
1/2TBE&J	15	12	12	12	9	9	9	9
5/8TBE&J		3	3	3	3	3	3	3
5/16CCF								6
TBSAFETY	3	3	3	3	6	6	6	3
GAC303					3	3	3	3
GAC345501	3	3	3	3	3	3	3	3
AGKE	1	1	1	1	2	2	2	2
340028	15	15	15	15	18	18	21	21
BGKE	2	2	2	2	2	2	2	2

Items shown above are necessary for complete "ground" guyed towers. (**Note:** Local engineers must be consulted to determine adequate base and anchor details and wind loading criteria for all roof type installations.)

Anchor grounding (AGKE) and base grounding (BGKE), as recommended by EIA, are included with the tower material. However, extra copper wire may be required for roof installations. See appropriate sheet for grounding material and order extra copper wire as a separate item.

Installation information and a safety package (part number ACWS) are also included with the tower material. This package consists of one anti-climb warning sign and two Danger - Watch for Wires labels along with other printed safety information.

All types of antenna installations should be thoroughly inspected by qualified personnel and re-marked with hazard and warning labels at least twice a year to insure safety and proper performance.

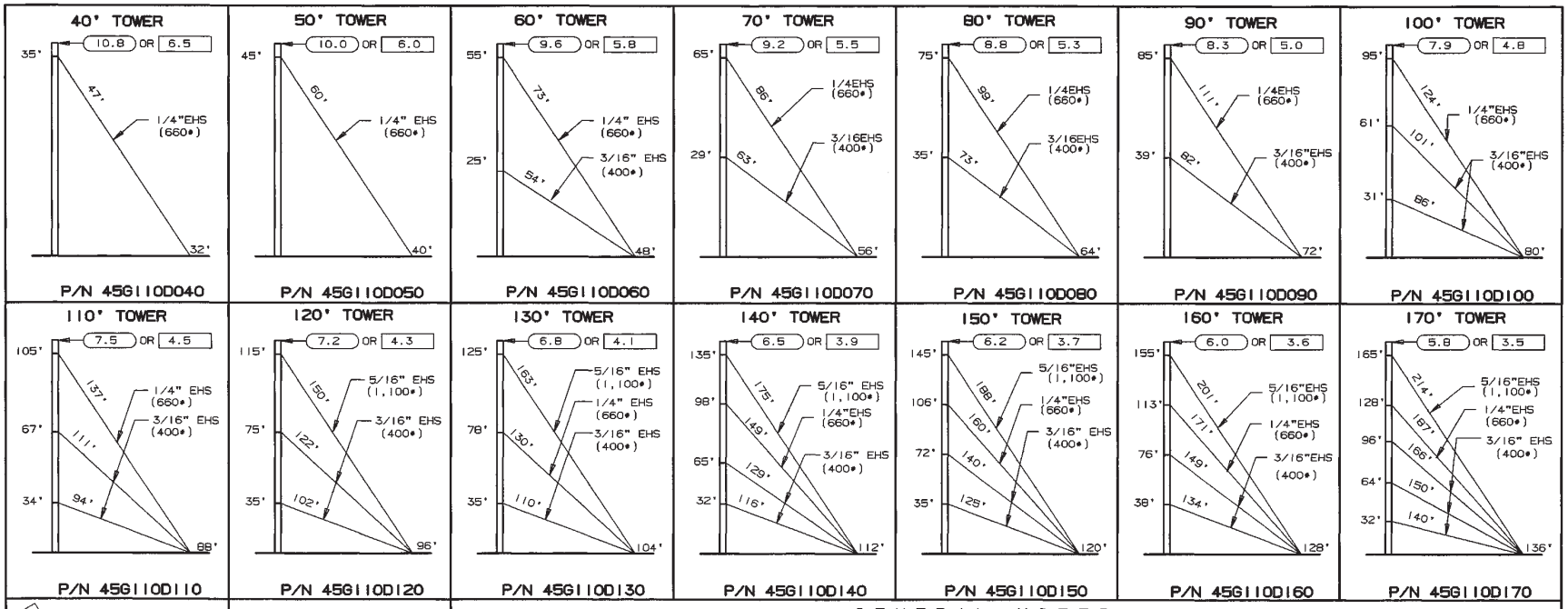

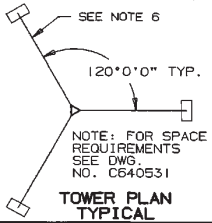

TOWER PLAN TYPICAL

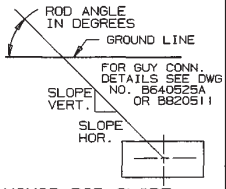

ANCHOR ROD SLOPE

GENERAL NOTES

1. TOWER DESIGNS ARE IN ACCORDANCE WITH APPROVED NATIONAL STANDARD ANSI/EIA-222-E-1991 (NO ICE).
2. ▭ ALLOWABLE PROJ. AREA (SQ. FT.) FOR ROUND MEMBER ANTENNAS. ▭ ALLOWABLE PROJ. AREA (SQ. FT.) FOR FLAT MEMBER ANTENNAS.
3. EQUIVALENT FLAT-PLATE ANTENNA AREAS, BASED ON EIA RS-222-C, MUST NOT EXCEED THE AREAS SHOWN FOR FLAT MEMBER ANTENNAS.
4. TOWER DESIGNS INCLUDE THREE SIDE ARMS, SYMMETRICALLY PLACED, HAVING A TOTAL EFFECTIVE PROJECTED AREA EQUAL TO 8.0 SQUARE FEET. FOR SIDE ARM DETAILS (P/N SA253UA). SEE DWG. C821662 LATEST REVISION.
5. DESIGNS ASSUME ONE 1/2" & ONE 7/8" DIA. LINE ON EACH TOWER FACE.
6. ANCHOR RADIUS IS FROM TOWER BASE TO INTERSECTION OF ROD WITH GROUND.
7. FOR GUY HARDWARE INSTALLATION DETAILS SEE DWG. A871382.
8. TOWER DESIGNS AND GUY CHORD LENGTHS SHOWN ARE BASED ON LEVEL GROUND. ADD 6 PERCENT TO CHORD LENGTHS (FOR SAG AND CONNECTIONS) FOR FINAL CUT LENGTHS. ( ) INDICATES INITIAL TENSION FOR GUY WIRES IN POUNDS AT 60 DEGREES FAHRENHEIT.
9. DO NOT INSTALL OR DISMANTLE TOWERS WITHIN FALLING DISTANCE OF ELECTRICAL AND/OR TELEPHONE LINES.
10. TOWER ERECTION AND DISMANTLING MUST BE BY QUALIFIED AND EXPERIENCED PERSONNEL.
11. TEMPORARY STEEL GUYS, WHEN REQUIRED DURING ERECTION OR DISMANTLING, MUST BE SUPPLIED AND INSTALLED BY THE ERECTOR.
12. INSTALL WARNING PLATE (P/N AGWS) IN A HIGHLY VISIBLE LOCATION.
13. ALL ANTENNA INSTALLATIONS MUST BE GROUNDED IN ACCORDANCE WITH LOCAL AND NATIONAL CODES.
14. EXTRA CABLE CLAMPS HAVE BEEN PROVIDED FOR TURNBUCKLE SAFETY REQUIREMENTS. FOR DETAILS SEE DWG. B680324 LATEST REVISION.

TOWER HT.	BASE PIER REF. DWG. C610621		ANCHOR DATA REF. DWG.: BLOCK-C620643; ROD-C660415						
	NO.	REAC. LBS.	BLOCK NO.	ROD NO.	ROD ANGLE	SLOPE HOR.	SLOPE VERT.	REAC. LBS. HOR.	REAC. LBS. VERT.
40'	CB2	4,450	4A	GAR30	47.8	10.9	12.0	1,830	2,020
50'	CB2	4,940	4A	GAR30	45.9	10.7	12.0	1,950	2,200
60'	CB2	5,620	4A	GAC303	42.6	12	11.0	2,740	2,520
70'	CB2	6,190	4A	GAC303	42.4	12	11.0	3,010	2,750
80'	CB2	6,770	4A	GAC303	42.4	12	11.9	3,260	2,990
90'	CB2	7,310	4A	GAC303	42.1	12	10.8	3,560	3,220
100'	CB2	8,180	4B	GAC3455	40.4	12	10.2	4,260	3,630
110'	CB2	8,830	4B	GAC3455	40.2	12	10.2	4,610	3,900
120'	CB2	9,900	4C	GAC3455	40.3	12	10.2	5,260	4,470
130'	CB2	10,730	4C	GAC3455	39.9	12	10.0	5,850	4,890
140'	CB2	11,950	4D	GAC3455	39.2	12	9.8	6,810	5,560
150'	CB2	12,660	4D	GAC3455	39.1	12	9.8	7,200	5,860
160'	CB2	13,430	4E	GAC3455	39.0	12	9.7	7,640	6,190
170'	CB2	14,630	4E	GAC3455	38.3	12	9.5	8,660	6,840

No.	Revision Description	Date	Rev By	Ckd By	Appd By
R1	EIA-222-E-1991 WAS EIA-222-D	12-9-91	RKB	[illegible]	TS

ROHN

	By	Date
Scale: NONE		
Drawn:	RKB	12-21-90
Checked:	KKG	1-28-91
App. Eng.:	TS	2-21-91
App. Sales:	AE	2-21-91

Title: GUYING DETAILS FOR 40'-170' 45G TOWERS 110 MPH BASIC WIND SPEED (NO ICE)

ENG. FILE:

DRAWING NO.: C902042 R1

Parts List P-594
(Replaces P-554)

January 1, 1995

Parts List for #45G Guyed Towers

110 MPH Basic Wind Speed (No Ice)

Tower Height

Part Number	40'	50'	60'	70'	80'	90'	100'	110'	120'	130'	140'	150'	160'	170'
45G	3	4	5	6	7	8	9	10	11	12	13	14	15	16
45AG2	1	1	1	1	1	1	1	1	1	1	1	1	1	1
BPC45G with 3/4X12PP	1	1	1	1	1	1	1	1	1	1	1	1	1	1
SA253UA	3	3	3	3	3	3	3	3	3	3	3	3	3	3
GA45GD	1	1	2	2	2	2	3	3	3	3	4	4	4	5
3/16EHS			175'	200'	250'	275'	625'	700'	725'	350'	875'	900'	925'	1500'
1/4EHS	150'	200'	250'	275'	325'	375'	400'	450'		425'	475'	525'	550'	700'
5/16EHS									500'	525'	575'	600'	650'	700'
BG2142			6	6	6	6	12	12	12	6	12	12	12	18
BG2144	6	6	6	6	6	6	6	6		6	6	6	6	6
BG2146									6	6	6	6	6	6
5/16THH			6	6	6	6	12	12	12	6	12	12	12	18
3/8THH	6	6	6	6	6	6	6	6		6	6	6	6	6
7/16THH									6	6	6	6	6	6
3/8TBE&E			3	3	3	3								
1/2TBE&E			3	3	3	3								
1/2TBE&J							9	9	6	6	9	9	9	12
5/8TBE&J	3	3							3	3	3	3	3	3
1/4CCM														6
TBSAFETY	3	3	3	3	3	3	3	3	3	3	3	3	3	
GAR30	3	3												
GAC303			3	3	3	3								
GAC345501							3	3	3	3	3	3	3	3
AGKE	1	1	1	1	1	1	1	1	1	1	1	1	1	1
340028	3	3	6	6	6	6	9	9	9	9	12	12	12	15
BGKE	2	2	2	2	2	2	2	2	2	2	2	2	2	2

Items shown above are necessary for complete "ground" guyed towers. (**Note:** Local engineers must be consulted to determine adequate base and anchor details and wind loading criteria for all roof type installations.)

Anchor grounding (AGKE) and base grounding (BGKE), as recommended by EIA, are included with the tower material. However, extra copper wire may be required for roof installations. See appropriate sheet for grounding material and order extra copper wire as a separate item.

Installation information and a safety package (part number ACWS) are also included with the tower material. This package consists of one anti-climb warning sign and two Danger - Watch for Wires labels along with other printed safety information.

All types of antenna installations should be thoroughly inspected by qualified personnel and re-marked with hazard and warning labels at least twice a year to insure safety and proper performance.

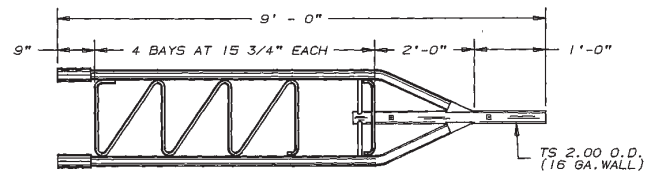

45AG

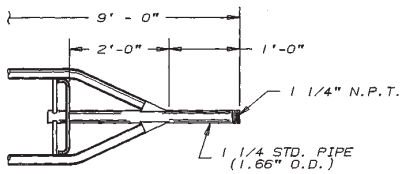

45AG1

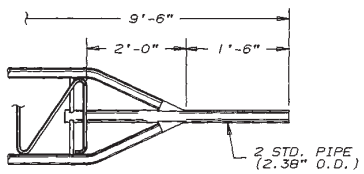

45AG2

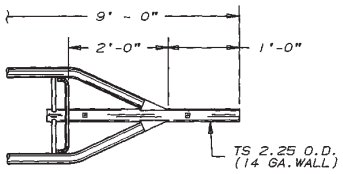

45AG3

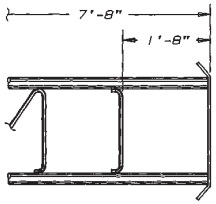

45AG4

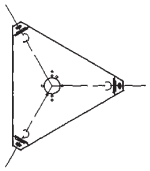

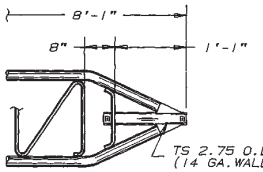

45AG5

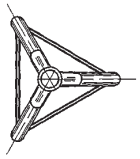

TYPICAL PLAN VIEW
(FOR ALL SECTIONS EXCEPT 45AG4)

NOTE: SPECIFICATIONS OF TOP SECTIONS ARE THE SAME AS SECTION NO. 45G EXCEPT AS NOTED ABOVE.

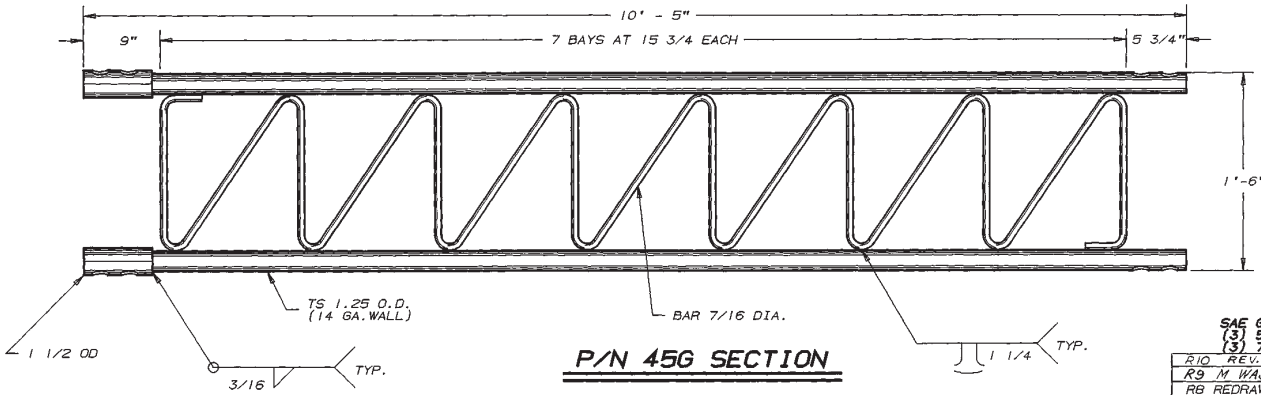

P/N 45G SECTION

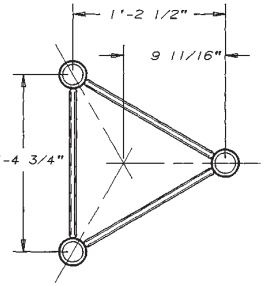

SAE GRADE 5 BOLT ASSY'S REQUIRED
(3) 5/16" DIA. X 2 3/8" LG. (NC BOLTS)
(3) 7/16" DIA. X 2 1/2" LG. (NC BOLTS)

R10	REV. ANSI/EIA-222-E-1991 NOTE	8-29-91	
R9	M WAS 49.5	10-25-89	
R8	REDRAWN AND REVISED SPEC.	02-13-88	GPW

SEC. >>	45G TOWER SECTION PROPERTIES		
ITEM	LEGS	BRACES	SECTION
SIZE	TS 1.25 ODX.083 WALL	BAR 7/16 DIA.	N/A
Fy	50.0	36.0	N/A
A	0.3043	0.1503	.913
S	0.0833	0.0082	4.15
I	0.0521	0.0018	42.7
r	0.4136	0.1094	6.84
L	15.75	22.1	VARIES
K	1.0	0.70	1.0
KL/r	38.0	141.4	VARIES
C	10.6	1.50	N/A
T	9.46	N/A	N/A
M	N/A	N/A	11.4
W	1.035	0.512	7.000
Ws	35.0	35.0	70.0

NOMENCLATURE

A = CROSS SECTIONAL AREA (SQUARE INCHES)
C = COMPRESSION CAPACITY WITH 1/3 INCREASE IN ALLOWABLE STRESS (KIPS)
I = MOMENT OF INERTIA ABOUT CENTROIDAL AXIS (INCHES**4)
Fy = MINIMUM YIELD STRENGTH (KSI)
K = EFFECTIVE LENGTH FACTOR (DIMENSIONLESS)
L = UNBRACED LENGTH (INCHES)
M = MOMENT CAPACITY WITH 1/3 INCREASE IN ALLOWABLE STRESS (FT.-KIPS)
N/A = NOT APPLICABLE
S = ELASTIC SECTION MODULUS (INCHES**3)
T = TENSION CAPACITY WITH 1/3 INCREASE IN ALLOWABLE STRESS (KIPS)
r = RADIUS OF GYRATION (INCHES)
W = WEIGHT PER FOOT (POUNDS)
Ws = WEIGHT PER SECTION (POUNDS)

NOTE: CAPACITIES SHOWN ARE BASED ON ANSI/EIA-222-E-1991.

No. Revision Description | Date | By

ROHN

Title: 45G SECTION ASSEMBLY

Scale: NONE
Drawn by: GPW 02/13/88
Checked by: 2-24-88
Approved by Engineering: 2-25-88
Approved by Production: Date
Approved by Sales: 2-25-88

Unless otherwise specified, dimensions are given in inches
Tolerances: Decimals ± Fractions ± Angles ±
Material | Finish | Weight

File Number
Drawing Number: C630645 R 10

BRUNING 41503

C640645-R7

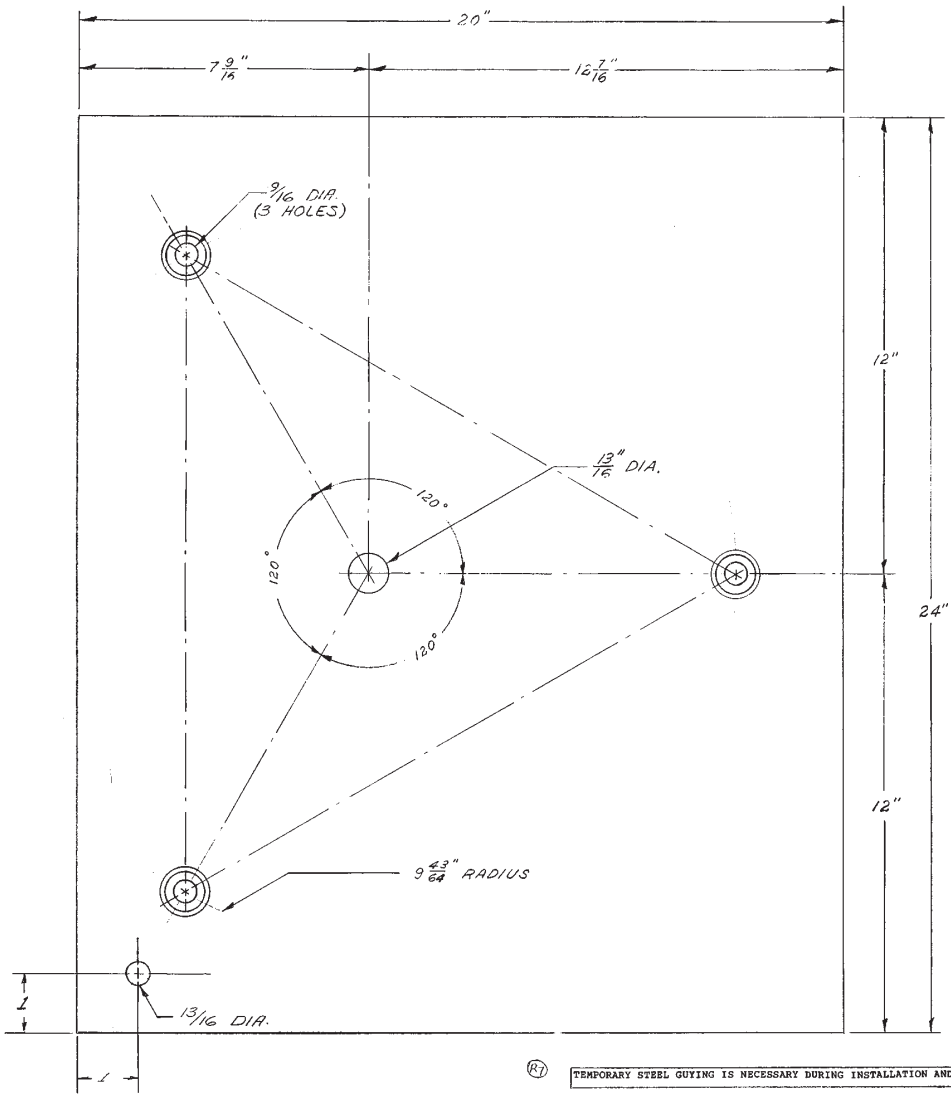

(R7) TEMPORARY STEEL GUYING IS NECESSARY DURING INSTALLATION AND DISMANTLING.

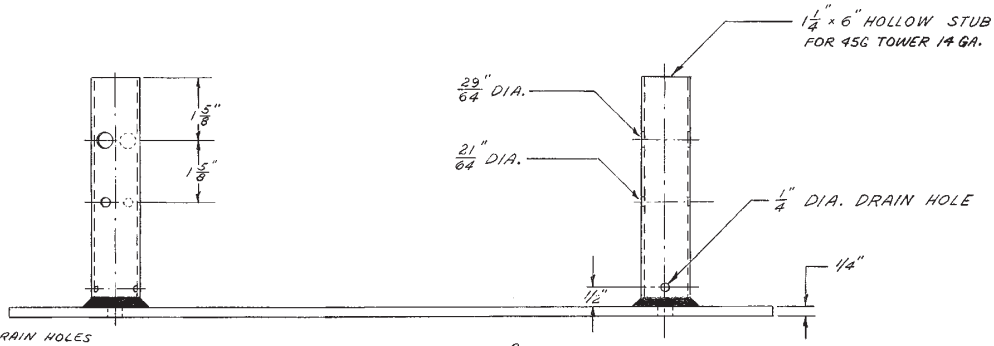

R7	REVISED TEMP. GUYING NOTE	12-5-88	EHT	R7	
R6	ADDED TEMP. GUYING NOTE	11-3-86	RDB	R6	
R5	DELETE EXCESS HOLES	8-30-82	WRD	R5	
R4	ADDED STUB THICKNESS DIM.	7-19-77	WRD	R4	
R3	ADDED NOTE	7-6-76	DJK	R3	
R2	REVISED DRAIN HOLE & STUB	1-9-75	RDB	R2	
R1	ADDED NOTE INDICATED	2-14-74	JER	R1	

DRAWN	M. BUENDIA
CHECKED	CEM
APPROVED	FAN
DATE	6-30-64
SCALE	

CUSTOMER

ROHN MANUFACTURING
PEORIA, ILLINOIS

TITLE: BASE PLATE FOR MODEL 45 TOWER

DRAWING NO. C640645R7

ILLINOIS B/P 1900-H

NOTE:
AFTER GALVANIZING CHECK DRAIN HOLES TO SEE THAT THEY ARE NOT PLUGGED.

(R3) NOTE: DUE TO VARIABLES INVOLVED IN ROOF AND OTHER INSTALLATIONS, IT SHALL BE THE CUSTOMER'S OR INSTALLER'S RESPONSIBILITY TO PROVIDE STRUCTURALLY ADEQUATE SUPPORTS FOR PIER & ANCHOR CONNECTIONS. IT MAY ALSO BE NECESSARY FOR THE CUSTOMER OR INSTALLER TO SECURE THE SERVICE OF A LOCAL ENGINEER TO DETERMINE THAT INSTALLATION COMPLIES WITH LOCAL BUILDING CODES.

BASE PLATE FOR CONCRETE PIER
(PART NO. BPC 45G)

NOTE: (R)
FOR USE WITH GUYED AND BRACKETED TOWERS ONLY.

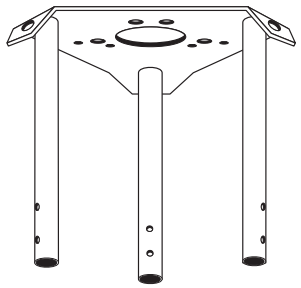

BPL45G
Converts standard section to a top section.

Shown with TB3 (2″ O.D.) Thrust Bearing. TB4 (3″ O.D.) Thrust Bearing also available.

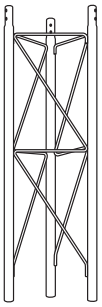

5′ Short Base
SB45G
For concrete.

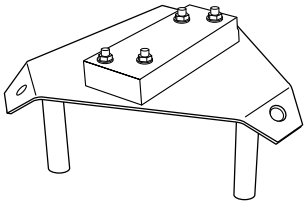

Amateur Bearing
AB
For use with 45AG4 top section and BPL45G.

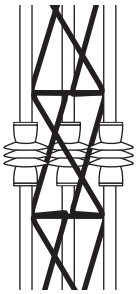

10′ Insulator Section
45RG*

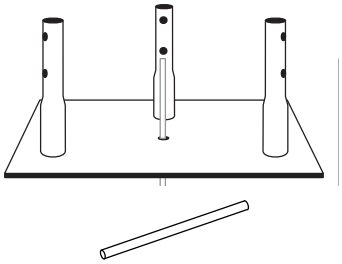

Base Plate
BPC45G
For concrete.

Pier Pin
3/4″ x 12″ PP.

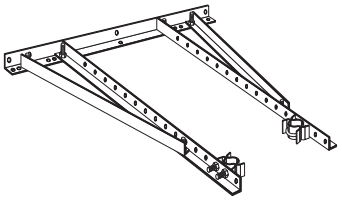

Universal House Bracket
HBU6″-30″

HBUTVRO 18″-36″ also available

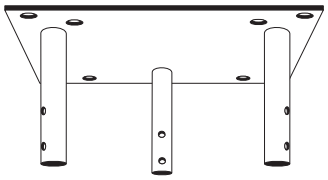

Beacon Plate
APL45G

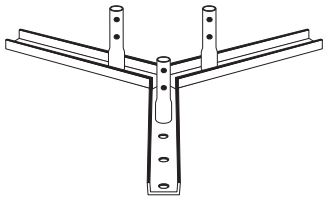

Flat Roof Mount
FR45G*

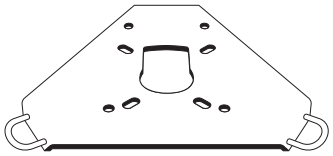

Accessory Shelf
AS455G

* Towers mounted on these bases must be bracketed or guyed at all times. Temporary steel guying may also be necessary during installation and dismantling.

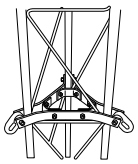	**Guy Bracket** GA45GD **Torque Bars** TB45D (not shown) Also available. Requires three 3/8S shackles for installation.
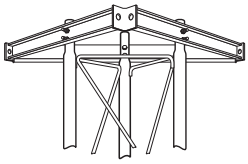	**Torque Arm Stabilizer Assembly** TA45 Shown with 45TDM2 Top Dish Mount
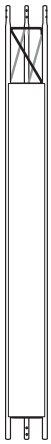	455ACL3 Bolt-on sheets to provide anti-climb protection.
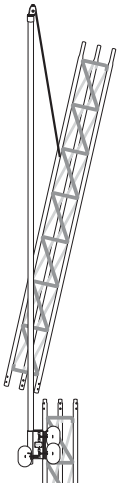	**Erection Fixture** EF2545 2-1/2″ sheave with 3/8″ I.D. groove. **Note:** Erection fixtures are for lifting one 10′ section at a time and are not intended for the lifting of personnel.

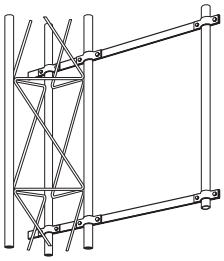	**Side Arm Bracket** SA253UA
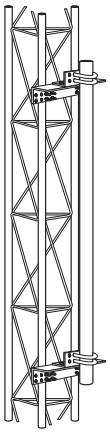	**Face Dish Mount** DM45G2 2-3/8″ O.D. 5′ long DM454 4-1/2″ O.D. pipe 5′ long also available.
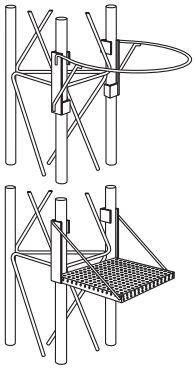	**Safety Ring** SR245 **Work Platform** WP45G
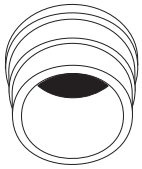	**Tower Bushing** TB50 1-1/4″ I.D. x 2″ O.D. For use in 45AG top section. TP75 Also available 1-1/2″ I.D. x 2″ O.D.

Blank

ROHN™ Products

55G Tower

Products for a Growing World of Technology

Blank

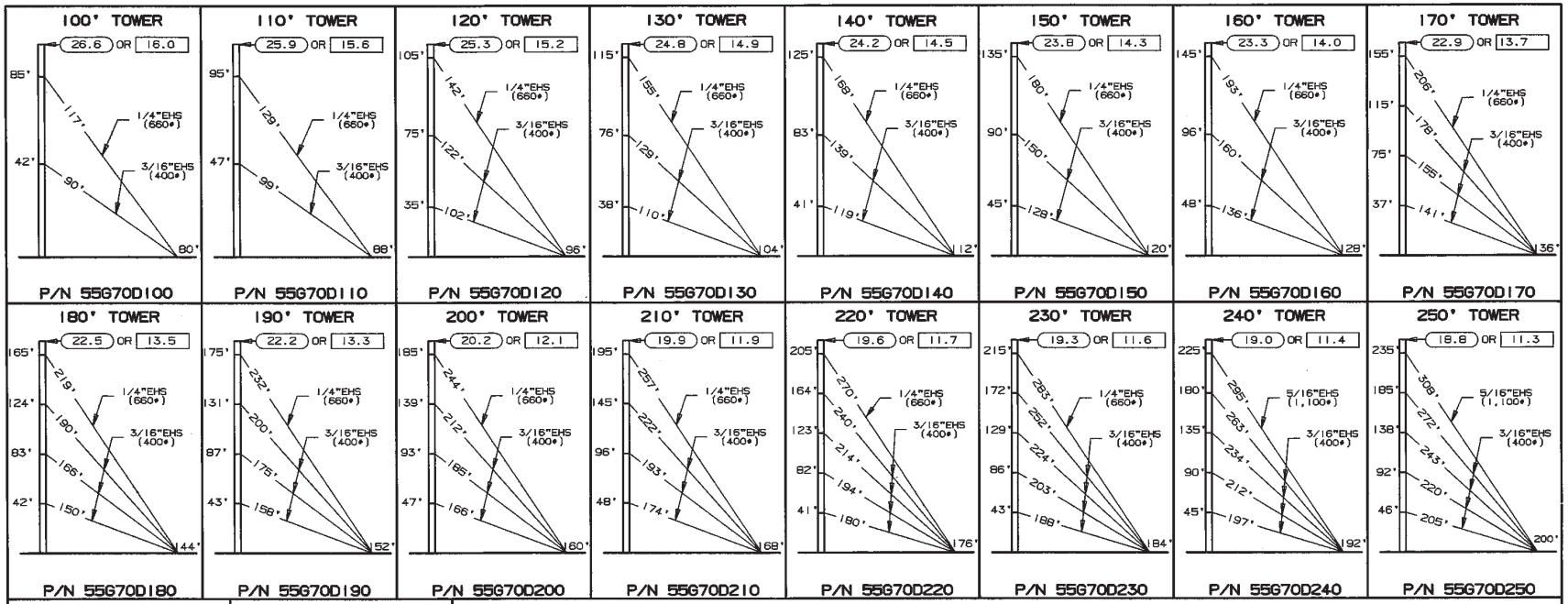

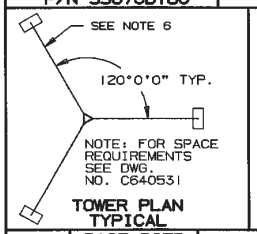

TOWER PLAN TYPICAL

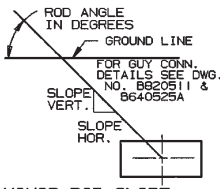

ANCHOR ROD SLOPE

GENERAL NOTES

1. TOWER DESIGNS ARE IN ACCORDANCE WITH APPROVED NATIONAL STANDARD ANSI/EIA-222-E-1991 (NO ICE).
2. ( ) ALLOWABLE PROJ. AREA (SQ. FT.) FOR ROUND MEMBER ANTENNAS.
   [ ] ALLOWABLE PROJ. AREA (SQ. FT.) FOR FLAT MEMBER ANTENNAS.
3. EQUIVALENT FLAT-PLATE ANTENNA AREAS, BASED ON EIA RS-222-C, MUST NOT EXCEED THE AREAS SHOWN FOR FLAT MEMBER ANTENNAS.
4. TOWER DESIGNS INCLUDE THREE SIDE ARMS, SYMMETRICALLY PLACED, HAVING A TOTAL EFFECTIVE PROJECTED AREA EQUAL TO 8.0 SQUARE FEET. FOR SIDE ARM DETAILS (P/N SA253UA). SEE DWG. C821662 LATEST REVISION.
5. DESIGNS ASSUME TWO 7/8" DIA. LINES ON EACH TOWER FACE.
6. ANCHOR RADIUS IS FROM TOWER BASE TO INTERSECTION OF ROD WITH GROUND.
7. FOR GUY HARDWARE INSTALLATION DETAILS SEE DWG. A871382.
8. TOWER DESIGNS AND GUY CHORD LENGTHS SHOWN ARE BASED ON LEVEL GROUND. ADD 6 PERCENT TO CHORD LENGTHS (FOR SAG AND CONNECTIONS) FOR FINAL CUT LENGTHS. ( ) INDICATES INITIAL TENSION FOR GUY WIRES IN POUNDS AT 60 DEGREES FAHRENHEIT.
9. DO NOT INSTALL OR DISMANTLE TOWERS WITHIN FALLING DISTANCE OF ELECTRICAL AND/OR TELEPHONE LINES.
10. TOWER ERECTION AND DISMANTLING MUST BE BY QUALIFIED AND EXPERIENCED PERSONNEL.
11. TEMPORARY STEEL GUYS, WHEN REQUIRED DURING ERECTION OR DISMANTLING, MUST BE SUPPLIED AND INSTALLED BY THE ERECTOR.
12. INSTALL WARNING PLATE (P/N ACW5) IN A HIGHLY VISIBLE LOCATION.
13. ALL ANTENNA INSTALLATIONS MUST BE GROUNDED IN ACCORDANCE WITH LOCAL AND NATIONAL CODES.
14. EXTRA CABLE CLAMPS HAVE BEEN PROVIDED FOR TURNBUCKLE SAFETY REQUIREMENTS. FOR DETAILS SEE DWG. B680324 LATEST REVISION.
15. TOWER DESIGNS, 200 FEET AND OVER, INCLUDE 2.0 SQUARE FEET OF EFFECTIVE PROJECTED AREA FOR A BEACON (DEDUCT ONE 7/8" LINE FOR BEACON).

TOWER HT.	BASE PIER REF. DWG. C610621		ANCHOR DATA REF. DWG.: BLOCK-C620643; ROD-C660415						
	NO.	REAC. LBS.	BLOCK NO.	ROD NO.	ROD ANGLE	SLOPE HOR.	SLOPE VERT.	REAC. LBS. HOR.	REAC. LBS. VERT.
100'	CB2	6,010	4A	GAC303	42.8	12	11.1	2,410	2,230
110'	CB2	6,280	4A	GAC303	42.9	12	11.2	2,500	2,320
120'	CB2	7,040	4A	GAC303	41.4	12	10.6	2,950	2,600
130'	CB2	7,360	4A	GAC303	41.3	12	10.5	3,090	2,710
140'	CB2	7,660	4A	GAC303	41.2	12	10.5	3,230	2,830
150'	CB2	8,060	4A	GAC303	40.6	12	10.3	3,450	2,950
160'	CB2	8,370	4A	GAC303	40.5	12	10.2	3,580	3,060
170'	CB2	9,110	4A	GAC345501	38.9	12	9.7	4,180	3,380
180'	CB2	9,440	4B	GAC345501	39.2	12	9.8	4,290	3,500
190'	CB2	9,800	4B	GAC345501	39.1	12	9.7	4,490	3,640
200'	CB2	10,180	4B	GAC345501	39.1	12	9.7	4,690	3,810
210'	CB2	10,530	4B	GAC345501	38.9	12	9.7	4,900	3,950
220'	CB2	11,350	4B	GAC345501	38.0	12	9.4	5,520	4,310
230'	CB2	11,680	4C	GAC345501	38.0	12	9.4	5,690	4,440
240'	CB2	12,490	4C	GAC345501	38.5	12	9.5	6,240	4,960
250'	CB2	12,840	4D	GAC345501	38.3	12	9.5	6,430	5,080

No.	Revision Description	Date	Rev By	Ckd By	Appd By
R1	REV'D GEN. NOTES WAS REV-D: NOW REV-E	1-27-92	RKB		

ROHN

Scale: NONE	By	Date
Drawn:	GPW WDU	9-1-87
Checked:	WRF	9-16-87
App. Eng.:	RAM	9-30-87
App. Sales:	AE	2-12-88

Title: GUYING DETAILS FOR 100'-250' 55G TOWER 70 MPH BASIC WIND SPEED (NO ICE)

ENG. FILE:

DRAWING NO.: C870489 R1

55G TOWER

	Part No.	Description	Wt.
	55G	10′ tower section	100
★	55TG	10′ tapered base section (sits on a pier pin - order pier pin separately)	138
★	55TGIA	10′ tapered base section (for use with A4197L base insulator)	138
★	55TGIAA	10′ tapered base section (for use with A4722B base insulator)	138
	55ACL	10′ welded anti-climb section	185
	455ACL3	3 anti-climb metal sheets for attaching to tower section	120
	5545G	20′ adapter section for joining 45G and 55G sections	160
	55JBK	Joint bolt kit	1
	APL55G	Beacon plate	20
	APL1258UM	Mid beacon plate assembly	30
	SB55G	5′ short base section for concrete	45
★	BPC55G	Concrete base plate (sits on a pier pin - order pier pin separately)	40
★	3/4X12PP	Pier pin (for BPC55G or 55TG - one required)	1
	GA55GD	Guy bracket assembly	27
	TB55D	Torque bars with sleeves (for use with GA55GD guy bracket) (requires 3 shackles, 1/2″ maximum size - order separately)	13
	HBUTVRO	Universal house bracket (18″ to 36″)	38
	TB3	Heavy duty thrust bearing, recommended for 2″ O.D. tubing	1
	TB4	Heavy duty thrust bearing, recommended for 3″ O.D. tubing	2-1/2
	BPL55G	Top plate with guy lugs for mounting AB, TB3 or TB4 bearing	3
	SA253UA	Side arm assembly, 2-1/2″ to 3′ extension, with 2-1/4″ support tube	28
✦	TA55	Torque arm stabilizer assembly	60
	55TDMKD	Top dish mount	65
	55TDM2S3KD	Top dish mount w/2″ standard pipe (extends 3′ above top plate)	85
	55TDM25S3KD	Top dish mount w/2-1/2″ standard pipe (extends 3′ above top plate)	105
	55TDM3S3KD	Top dish mount w/3″ standard pipe (extends 3′ above top plate)	120
	55TDM35S3KD	Top dish mount w/3-1/2″ standard pipe (extends 3′ above top plate)	130
	55TDM4S3KD	Top dish mount w/4″ standard pipe (extends 3′ above top plate)	145
✦	DM55G2	Side face dish mount w/2″ (2-3/8″ O.D.) 5′ long standard pipe	53
	DM554	Side face dish mount w/4″ (4-1/2″ O.D.) 5′ long standard pipe	89
	AS455G	Accessory shelf	8
⌘	SR55	Safety ring	10
	WP55G	Work platform	15

Note: The price on #55 sections will be higher on shipments to the following states: Arizona, California, Colorado, Idaho, Montana, Nevada, Oregon, Utah, Washington, and Wyoming.

⌘ Available by special order only.
★ Towers mounted on this base must be bracketed or guyed at all times.
✦ This item is not to be used without proper design consideration.

PARTS LIST FOR #55G GUYED TOWERS
70 MPH Basic Wind Speed (No Ice)

Tower Height	55G	BPC55G w/3/4X12PP	APL55G	SA253UA	GA55GD	G.W. 3/16" EHS	G.W. 1/4" EHS	G.W. 5/16" EHS	BG2142	BG2144	BG2146	5/16" THH	3/8" THH	7/16" THH	3/8TBE&E	1/2TBE&E	1/2TBE&J	5/8TBE&J	GAC 303	GAC345501	AGKE	BGKE
100′	10	1	1	3	2	300′	375′		6	6		6	6		3	3			3		1	2
110′	11	1	1	3	2	325′	425′		6	6		6	6		3	3			3		1	2
120′	12	1	1	3	3	725′	500′		12	6		12	6		6	3			3		1	2
130′	13	1	1	3	3	775′	500′		12	6		12	6		6	3			3		1	2
140′	14	1	1	3	3	825′	550′		12	6		12	6		6	3			3		1	2
150′	15	1	1	3	3	900′	575′		12	6		12	6		6	3			3		1	2
160′	16	1	1	3	3	950′	625′		12	6		12	6		6	3			3		1	2
170′	17	1	1	3	4	1525′	675′		18	6		18	6				12			3	1	2
180′	18	1	1	3	4	1625′	700′		18	6		18	6				12			3	1	2
190′	19	1	1	3	4	1700′	750′		18	6		18	6				12			3	1	2
200′	20	1	1	3	4	1800′	800′		18	6		18	6				12			3	1	2
210′	21	1	1	3	4	1875′	825′		18	6		18	6				12			3	1	2
220′	22	1	1	3	5	2700′	875′		24	6		24	6				15			3	1	2
230′	23	1	1	3	5	2775′	900′		24	6		24	6				15			3	1	2
240′	24	1	1	3	5	2900′		950′	24		6	24		6			12	3		3	1	2
250′	25	1	1	3	5	3000′		1000′	24		6	24		6			12	3		3	1	2

Items shown above are necessary for a complete "ground" guyed tower. (Note: Cable clamps and extra wire have been provided for turnbuckle safety requirements.)

Anchor grounding (AGKE) kit, along with appropriate ground clamps and base grounding (BGKE) kits, as recommended by EIA, are included with the tower material.

Installation information and a safety package (part number ACWS) are also included with the tower material. The safety package consists of one anti-climb warning sign and two Danger - Watch for Wires labels along with other printed safety information.

All types of antenna installations should be thoroughly inspected by qualified personnel and re-marked with hazard and warning labels at least twice a year to insure safety and proper performance.

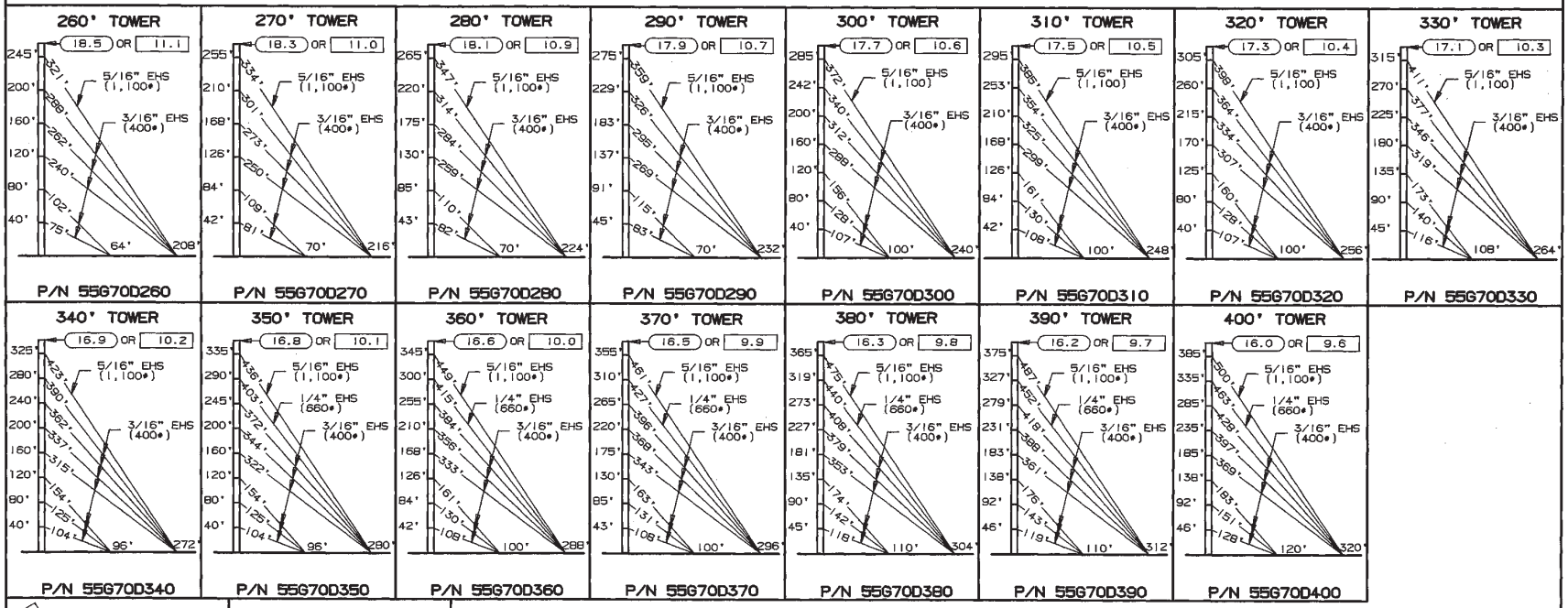

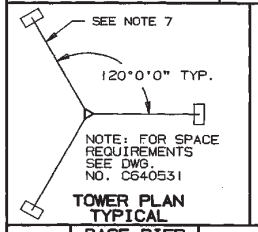

TOWER PLAN TYPICAL

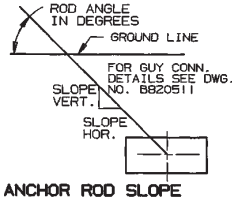

ANCHOR ROD SLOPE

GENERAL NOTES

1. TOWER DESIGN IN ACCORDANCE WITH APPROVED NATIONAL STANDARD ANSI/EIA-222-E-1991 (NO ICE)
2. ▭ALLOWABLE PROJ. AREA (SQ. FT.) FOR ROUND MEMBER ANTENNAS. ▭ALLOWABLE PROJ. AREA (SQ. FT.) FOR FLAT MEMBERS ANTENNAS.
3. EQUIVALENT FLAT-PLATE ANTENNA AREAS, BASED ON EIA RS-222-C, MUST NOT EXCEED THE AREAS SHOWN FOR FLAT MEMBERS ANTENNAS.
4. TOWER DESIGNS INCLUDE THREE SIDE ARMS, SYMMETRICALLY PLACED, HAVING A TOTAL EFFECTIVE PROJECTED AREA EQUAL TO 8.0 SQUARE FEET. FOR SIDE ARM DETAILS (P/N SA253UA). SEE DWG. C821662 LATEST REVISION.
5. DESIGN ASSUME TWO 7/8" DIA. LINES ON EACH TOWER FACE.
6. TOWER DESIGNS, 200 FEET AND OVER, INCLUDE 2.0 SQUARE FEET OF EFFECTIVE PROJECTED AREA FOR A BEACON (DEDUCT ONE 7/8" LINE FOR BEACON.)
7. ANCHOR RADIUS IS FROM TOWER BASE TO INTERSECTION OF ROD WITH GROUND.
8. TOWER DESIGNS AND GUY CHORD LENGTHS SHOWN ARE BASED ON LEVEL GROUND. ADD 6 PERCENT TO CHORD LENGTHS (FOR SAG AND CONNECTIONS) FOR FINAL CUT LENGTHS. ( ) INDICATES INITIAL TENSION FOR GUY WIRES IN POUNDS AT 60 DEGREES FAHRENHEIT.
9. DO NOT INSTALL OR DISMANTLE TOWERS WITHIN FALLING DISTANCE OF ELECTRICAL AND/OR TELEPHONE LINES.
10. TOWER ERECTION AND DISMANTLING MUST BE BY QUALIFIED AND EXPERIENCED PERSONNEL.
11. TEMPORARY STEEL GUYS, WHEN REQUIRED DURING ERECTION OR DISMANTLING, MUST BE SUPPLIED AND INSTALLED BY THE ERECTOR.
12. INSTALL WARNING PLATE (P/N ACWS) IN A HIGHLY VISIBLE LOCATION.
13. ALL ANTENNA INSTALLATIONS MUST BE GROUNDED IN ACCORDANCE WITH LOCAL AND NATIONAL CODES.
14. EXTRA CABLE CLAMPS HAVE BEEN PROVIDED FOR TURNBUCKLE SAFETY REQUIREMENTS. FOR DETAILS SEE DWG. B680324 LATEST REVISION.
15. FOR GUY HARDWARE INSTALLATION DETAILS SEE DWG. A871382.

TOWER HT.	BASE PIER REF. DWG. C610621		ANCHOR DATA REF. DWG.: BLOCK-C620643; ROD-C660415							ANCHOR DATA REF. DWG.: BLOCK-C620643; ROD-C660415						
	NO.	REAC. LBS.	BLOCK NO.	ROD NO.	ROD ANGLE	SLOPE HOR.	SLOPE VERT.	REAC. LBS. HOR.	REAC. LBS. VERT.	BLOCK NO.	ROD NO.	ROD ANGLE	SLOPE HOR.	SLOPE VERT.	REAC. LBS. HOR.	REAC. LBS. VERT.
260'	CB2	14,940	4A	GAC303	42.6	12	11	1,350	1,250	4D	GAC345501	42.7	12	11.1	5,470	5,040
270'	CB2	15,330	4A	GAC303	41.5	12	10.6	1,410	1,250	4D	GAC345501	42.7	12	11.1	5,610	5,170
280'	CB2	15,800	4A	GAC303	42.2	12	10.9	1,420	1,280	4D	GAC345501	42.6	12	11.0	5,780	5,320
290'	CB2	16,460	4A	GAC303	43.7	12	11.5	1,450	1,390	4D	GAC345501	42.7	12	11.1	5,950	5,480
300'	CB2	17,590	4A	GAC303	38.5	12	9.5	2,250	1,790	4D	GAC345501	43.5	12	11.4	5,930	5,620
310'	CB2	18,240	4A	GAC303	39.9	12	10	2,300	1,920	4D	GAC345501	43.6	12	11.4	6,060	5,760
320'	CB2	18,650	4A	GAC303	39.5	12	9.9	2,320	1,910	4D	GAC345501	43.4	12	11.3	6,260	5,910
330'	CB2	19,190	4A	GAC303	39.7	12	10	2,420	2,010	4D	GAC345501	43.6	12	11.4	6,360	6,040
340'	CB2	20,110	4A	GAC303	39.6	12	9.9	2,200	1,830	4E	GAC345501	42.2	12	10.9	7,410	6,730
350'	CB3	21,100	4A	GAC303	39.6	12	9.9	2,190	1,810	4E	GAC345501	42.1	12	10.8	7,990	7,200
360'	CB3	21,650	4A	GAC303	39.6	12	9.9	2,300	1,900	4E	GAC345501	42.2	12	10.9	8,130	7,360
370'	CB3	22,430	4A	GAC303	40.5	12	10.3	2,350	2,010	4E	GAC345501	42.3	12	10.9	8,330	7,580
380'	CB3	22,750	4A	GAC303	38.9	12	9.7	2,440	1,970	6A	GAC565501	42.3	12	10.9	8,500	7,730
390'	CB3	23,210	4A	GAC303	39.4	12	9.9	2,440	2,010	6A	GAC565501	42.2	12	10.9	8,700	7,880
400'	CB3	23,400	4A	GAC303	37.0	12	9.1	2,490	1,880	6A	GAC565501	42	12	10.8	8,940	8,060

No.	Revision Description	Date	Rev By	Ckd By	Apvd By
R1	REV'D EIA-222-D TO EIA-222-E	10-15-91	RKB		

ROHN

Scale: NONE	By	Date
Drawn:	GPW/RDU	9-1-97
Checked:	WRF/RDU	9-30-87
App. Eng.:	RAM	10-1-87
App. Sales:	AE	2-12-88

Title: GUYING DETAILS FOR 260'-400' 55G TOWERS 70 MPH BASIC WIND SPEED (NO ICE)

ENG. FILE:

DRAWING NO.: C870491 R1

PARTS LIST FOR #55G GUYED TOWERS
70 MPH Basic Wind Speed (No Ice)

Tower Height	55G	BPC55G w/3/4X12PP	APL55G	SA253UA	GA55GD	APL1258UM	G.W. 3/16" EHS	G.W. 1/4" EHS	G.W. 5/16" EHS	BG2142	BG2144	BG2146	5/16" THH	3/8" THH	7/16" THH	3/8TBE&E	1/2TBE&J	5/8TBE&J	GAC 303	GAC345501	GAC565501	AGKE	BGKE
260′	26	1	1	3	6		3100′		1025′	30		6	30		6	6	9	3	3	3		2	2
270′	27	1	1	3	6		3225′		1075′	30		6	30		6	6	9	3	3	3		2	2
280′	28	1	1	3	6		3350′		1125′	30		6	30		6	6	9	3	3	3		2	2
290′	29	1	1	3	6		3500′		1150′	30		6	30		6	6	9	3	3	3		2	2
300′	30	1	1	3	7		4250′		1200′	36		6	36		6	9	9	3	3	3		2	2
310′	31	1	1	3	7		4400′		1225′	36		6	36		6	9	9	3	3	3		2	2
320′	32	1	1	3	7		4500′		1275′	36		6	36		6	9	9	3	3	3		2	2
330′	33	1	1	3	7		4750′		1325′	36		6	36		6	9	9	3	3	3		2	2
340′	34	1	1	3	8		5725′		1350′	42		6	42		6	9	12	3	3	3		2	2
350′	35	1	1	3	8		4750′	1455′	1400′	36	6	6	36	6	6	9	12	3	3	3		2	2
360′	36	1	1	3	8	1	4750′	1325′	1450′	36	6	6	36	6	6	9	12	3	3	3		2	2
370′	37	1	1	3	8	1	4800′	1375′	1475′	36	6	6	36	6	6	9	12	3	3	3		2	2
380′	38	1	1	3	8	1	5150′	1500′	1525′	36	6	6	36	6	6	9		15	3		3	2	2
390′	39	1	1	3	8	1	5150′	1450′	1550′	36	6	6	36	6	6	9		15	3		3	2	2
400′	40	1	1	3	8	1	5275′	1500′	1600′	36	6	6	36	6	6		9	15		3	3	2	2

Items shown above are necessary for a complete "ground" guyed tower. (Note: Cable clamps and extra wire have been provided for turnbuckle safety requirements.)

Anchor grounding (AGKE) kit, along with appropriate ground clamps and base grounding (BGKE) kits, as recommended by EIA, are included with the tower material.

Installation information and a safety package (part number ACWS) are also included with the tower material. The safety package consists of one anti-climb warning sign and two Danger - Watch for Wires labels along with other printed safety information.

All types of antenna installations should be thoroughly inspected by qualified personnel and re-marked with hazard and warning labels at least twice a year to insure safety and proper performance.

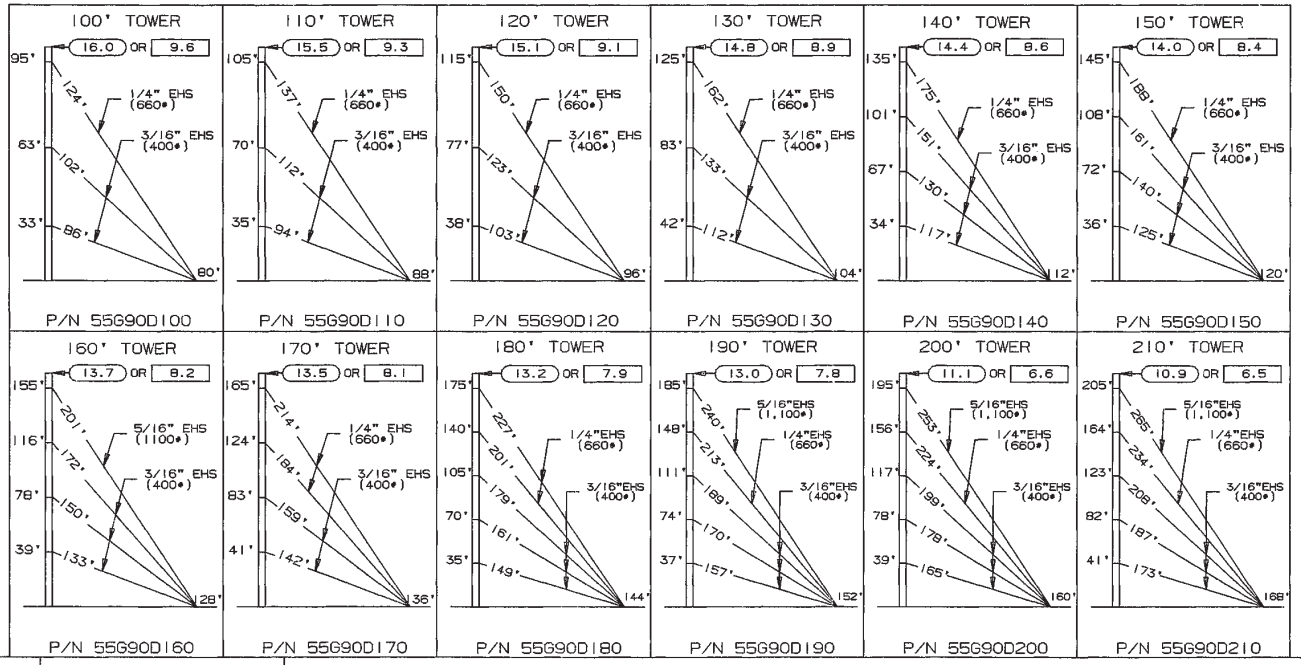

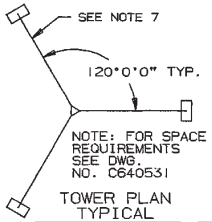

TOWER PLAN TYPICAL

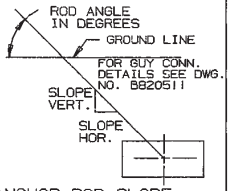

ANCHOR ROD SLOPE

GENERAL NOTES

1. TOWER DESIGNS ARE IN ACCORDANCE WITH APPROVED NATIONAL STANDARD ANSI/EIA-222-E-1991 (NO ICE).
2. ▭ ALLOWABLE PROJ. AREA (SQ. FT.) FOR ROUND MEMBER ANTENNAS. ▭ ALLOWABLE PROJ. AREA (SQ. FT.) FOR FLAT MEMBER ANTENNAS.
3. EQUIVALENT FLAT-PLATE ANTENNA AREAS, BASED ON EIA RS-222-C, MUST NOT EXCEED THE AREAS SHOWN FOR FLAT MEMBER ANTENNAS.
4. TOWER DESIGNS INCLUDE THREE SIDE ARMS, SYMMETRICALLY PLACED, HAVING A TOTAL EFFECTIVE PROJECTED AREA EQUAL TO 8.0 SQUARE FEET. FOR SIDE ARM DETAILS (P/N SA253UA). SEE DWG. C821662 LATEST REVISION.
5. DESIGNS ASSUME TWO 7/8" DIA. LINES ON EACH TOWER FACE.
6. TOWER DESIGNS, 200 FEET AND OVER, INCLUDE 2.0 SQUARE FEET OF EFFECTIVE PROJECTED AREA FOR A BEACON (DEDUCT ONE 7/8" LINE FOR BEACON).
7. ANCHOR RADIUS IS FROM TOWER BASE TO INTERSECTION OF ROD WITH GROUND.
8. TOWER DESIGNS AND GUY CHORD LENGTHS SHOWN ARE BASED ON LEVEL GROUND. ADD 6 PERCENT TO CHORD LENGTHS (FOR SAG AND CONNECTIONS) FOR FINAL CUT LENGTHS. ( ) INDICATES INITIAL TENSION FOR GUY WIRES IN POUNDS AT 60 DEGREES FAHRENHEIT.
9. DO NOT INSTALL OR DISMANTLE TOWERS WITHIN FALLING DISTANCE OF ELECTRICAL AND/OR TELEPHONE LINES.
10. TOWER ERECTION AND DISMANTLING MUST BE BY QUALIFIED AND EXPERIENCED PERSONNEL.
11. TEMPORARY STEEL GUYS, WHEN REQUIRED DURING ERECTION OR DISMANTLING, MUST BE SUPPLIED AND INSTALLED BY THE ERECTOR.
12. INSTALL WARNING PLATE (P/N ACWS) IN A HIGHLY VISIBLE LOCATION.
13. ALL ANTENNA INSTALLATIONS MUST BE GROUNDED IN ACCORDANCE WITH LOCAL AND NATIONAL CODES.
14. EXTRA CABLE CLAMPS HAVE BEEN PROVIDED FOR TURNBUCKLE SAFETY REQUIREMENTS. FOR DETAILS SEE DWG. B680324 LATEST REVISION.
15. FOR GUY HARDWARE INSTALLATION DETAILS SEE DWG. A871382.

TOWER HT.	BASE PIER REF. DWG. C610621		INNER ANCHOR DATA REF. DWG.: BLOCK-C620643; ROD-C660415						
	NO.	REAC. LBS.	BLOCK NO.	ROD NO.	ROD ANGLE	SLOPE HOR.	SLOPE VERT.	REAC. LBS. HOR.	REAC. LBS. VERT.
100'	CB2	7,630	4A	GAC3455	41.8	12	10.7	3,530	3,150
110'	CB2	8,080	4A	GAC3455	41.5	12	10.6	3,760	3,340
120'	CB2	8,650	4B	GAC3455	41.3	12	10.5	4,080	3,580
130'	CB2	9,130	4B	GAC3455	41.2	12	10.5	4,300	3,760
140'	CB2	10,000	4B	GAC3455	39.5	12	9.9	5,040	4,160
150'	CB2	10,500	4B	GAC3455	39.4	12	9.9	5,300	4,350
160'	CB2	11,570	4C	GAC3455	39.8	12	10	5,930	4,950
170'	CB2	11,900	4D	GAC3455	39.3	12	9.8	6,140	5,020
180'	CB2	12,870	4D	GAC3455	38.5	12	9.5	6,980	5,540
190'	CB2	14,090	4E	GAC3455	38.9	12	9.7	7,670	6,190
200'	CB2	14,640	4E	GAC3455	38.8	12	9.7	7,970	6,410
210'	CB2	15,290	4E	GAC3455	38.7	12	9.6	8,360	6,690

No.	Revision Description	Date	Rev By	Ckd By	Appd By
R2	REV'D 120' TO 110' FOR P/N 55G90D110	11/10/92	CSR	WDU	TS
R1	REV'D EIA-222-D TO EIA-222-E-1991	7-24-92	RKB	WMN	TS

ROHN

Scale: NONE	By	Date
Drawn:	GPW/WDL	9-1-87
Checked:	WRF	9-18-87
App. Eng.:	RAW	9/30/87
App. Sales:	AE	2-12-87

Title: GUYING DETAILS FOR 100'-210' 55G TOWERS 90 MPH BASIC WIND SPEED (NO ICE)

ENG. FILE:

DRAWING NO.: C870496 R2

Parts List P-608
(Replaces P-587)

PARTS LIST FOR #55G GUYED TOWERS
90 MPH Basic Wind Speed (No Ice)

Tower Height	55G	BPC55G w/3/4X12PP	APL55G	SA253UA	GA55GD	G.W. 3/16" EHS	G.W. 1/4" EHS	G.W. 5/16" EHS	BG2142	BG2144	BG2146	5/16" THH	3/8" THH	7/16" THH	1/2TBE&J	5/8TBE&J	GAC345501	AGKE	BGKE
100′	10	1	1	3	3	625′	400′		12	6		12	6		9		3	1	2
110′	11	1	1	3	3	675′	450′		12	6		12	6		9		3	1	2
120′	12	1	1	3	3	725′	500′		12	6		12	6		9		3	1	2
130′	13	1	1	3	3	800′	525′		12	6		12	6		9		3	1	2
140′	14	1	1	3	4	1275′	575′		18	6		18	6		12		3	1	2
150′	15	1	1	3	4	1375′	600′		18	6		18	6		12		3	1	2
160′	16	1	1	3	4	1500′		650′	18		6	18		6	9	3	3	1	2
170′	17	1	1	3	4	1000′	1275′		12	12		12	12		12		3	1	2
180′	18	1	1	3	5	1575′	1425′		18	12		18	12		15		3	1	2
190′	19	1	1	3	5	1650′	700′	775′	18	6	6	18	6	6	12	3	3	1	2
200′	20	1	1	3	5	1725′	725′	825′	18	6	6	18	6	6	12	3	3	1	2
210′	21	1	1	3	5	1825′	750′	850′	18	6	6	18	6	6	12	3	3	1	2

Items shown above are necessary for a complete "ground" guyed tower. (Note: Cable clamps and extra wire have been provided for turnbuckle safety requirements.)

Anchor grounding (AGKE) kit, along with appropriate ground clamps, and base grounding (BGKE) kits, as recommended by EIA, are included with the tower material.

Installation information and a safety package (part number ACWS) are also included with the tower material. The safety package consists of one anti-climb warning sign and two Danger - Watch for Wires labels along with other printed safety information.

All types of antenna installations should be thoroughly inspected by qualified personnel and re-marked with hazard and warning labels at least twice a year to insure safety and proper performance.

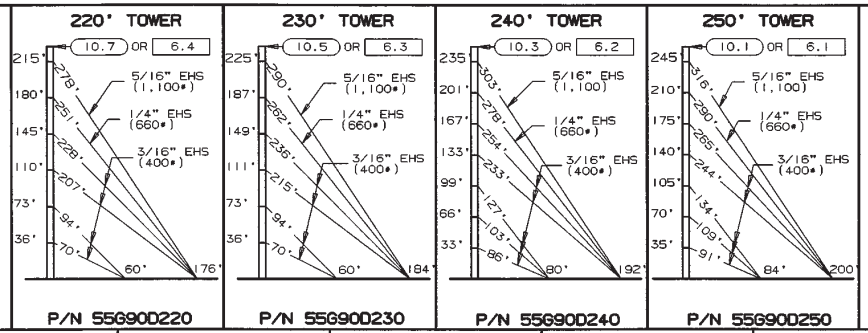

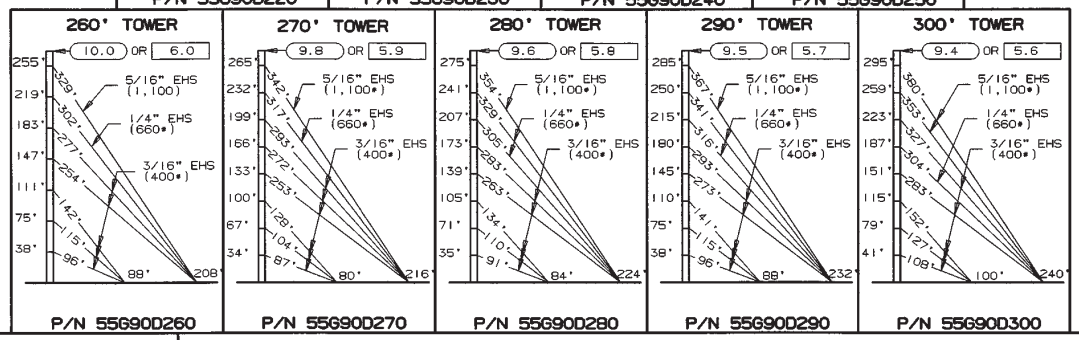

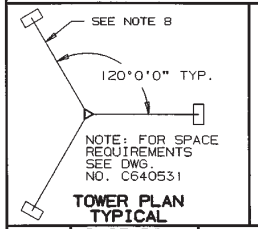

NOTE: FOR SPACE REQUIREMENTS SEE DWG. NO. C640531

TOWER PLAN TYPICAL

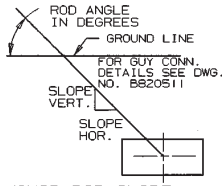

ANCHOR ROD SLOPE

GENERAL NOTES

1. TOWER DESIGN IN ACCORDANCE WITH APPROVED NATIONAL STANDARD ANSI/EIA-222-E-1991 (NO ICE)
2. ▭ ALLOWABLE PROJ. AREA (SQ. FT.) FOR ROUND MEMBER ANTENNAS. ▭ ALLOWABLE PROJ. AREA (SQ. FT.) FOR FLAT MEMBER ANTENNAS.
3. EQUIVALENT FLAT-PLATE ANTENNA AREAS, BASED ON EIA RS-222-C. MUST NOT EXCEED THE AREAS SHOWN FOR FLAT MEMBERS ANTENNAS.
4. TOWER DESIGNS INCLUDE THREE SIDE ARMS, SYMMETRICALLY PLACED, HAVING A TOTAL EFFECTIVE PROJECTED AREA EQUAL TO 8.0 SQUARE FEET. FOR SIDE ARM DETAILS (P/N SA253UA). SEE DWG. C821662 LATEST REVISION.
5. DESIGN ASSUME TWO 7/8" DIA. LINES ON EACH TOWER FACE.
6. TOWER DESIGNS, 200 FEET AND OVER, INCLUDE 2.0 SQUARE FEET OF EFFECTIVE PROJECTED AREA FOR A BEACON (DEDUCT ONE 7/8" LINE FOR BEACON.)
7. ANCHOR RADIUS IS FROM TOWER BASE TO INTERSECTION OF ROD WITH GROUND.
8. TOWER DESIGNS AND GUY CHORD LENGTHS SHOWN ARE BASED ON LEVEL GROUND. ADD 6 PERCENT TO CHORD LENGTHS (FOR SAG AND CONNECTIONS) FOR FINAL CUT LENGTHS. ( ) INDICATES INITIAL TENSION FOR GUY WIRES IN POUNDS AT 60 DEGREES FAHRENHEIT.
9. DO NOT INSTALL OR DISMANTLE TOWERS WITHIN FALLING DISTANCE OF ELECTRICAL AND/OR TELEPHONE LINES.
10. TOWER ERECTION AND DISMANTLING MUST BE BY QUALIFIED AND EXPERIENCED PERSONNEL.
11. TEMPORARY STEEL GUYS, WHEN REQUIRED DURING ERECTION OR DISMANTLING, MUST BE SUPPLIED AND INSTALLED BY THE ERECTOR.
12. INSTALL WARNING PLATE (P/N ACWS) IN A HIGHLY VISIBLE LOCATION.
13. ALL ANTENNA INSTALLATIONS MUST BE GROUNDED IN ACCORDANCE WITH LOCAL AND NATIONAL CODES.
14. EXTRA CABLE CLAMPS HAVE BEEN PROVIDED FOR TURNBUCKLE SAFETY REQUIREMENTS. FOR DETAILS SEE DWG. B680324 LATEST REVISION.
15. FOR GUY HARDWARE INSTALLATION DETAILS SEE DWG. AB71382.

TOWER HT.	BASE PIER REF. DWG. C610621		INNER ANCHOR DATA REF. DWG.: BLOCK-C620643; ROD-C660415							OUTER ANCHOR DATA REF. DWG.: BLOCK-C620643; ROD-C660415						
	NO.	REAC. LBS.	BLOCK NO.	ROD NO.	ROD ANGLE	SLOPE HOR.	SLOPE VERT.	REAC. LBS. HOR.	REAC. LBS. VERT.	BLOCK NO.	ROD NO.	ROD ANGLE	SLOPE HOR.	SLOPE VERT.	REAC. LBS. HOR.	REAC. LBS. VERT.
220'	CB2	18,390	4A	GAC303	41.9	12	10.8	1,880	1,690	4E	GAC345501	43.4	12	11.3	7,040	6,650
230'	CB2	19,010	4A	GAC303	42.0	12	10.8	1,870	1,680	4E	GAC345501	43.0	12	11.2	7,400	6,910
240'	CB2	20,430	4A	GAC303	39.7	12	10.0	2,740	2,280	4E	GAC345501	44.0	12	11.6	7,310	7,060
250'	CB2	21,410	4A	GAC303	40.0	12	10.1	2,920	2,450	4E	GAC345501	44.0	12	11.6	7,590	7,320
260'	CB3	22,250	4A	GAC303	40.3	12	10.2	3,040	2,580	4E	GAC345501	44.0	12	11.6	7,830	7,560
270'	CB3	23,280	4A	GAC303	39.9	12	10	2,690	2,250	6A	GAC565501	42.9	12	11.1	9,140	8,480
280'	CB3	24,610	4A	GAC303	40.0	12	10.1	2,830	2,380	6A	GAC565501	42.8	12	11.1	9,690	8,980
290'	CB3	25,530	4A	GAC303	40.1	12	10.1	2,960	2,490	6A	GAC565501	42.9	12	11.1	10,010	9,290
300'	CB3	26,880	4A	GAC303	38.0	12	9.4	3,170	2,480	6A	GAC565501	42.8	12	11.1	10,750	9,960

No.	Revision Description	Date	Rev By	Ckd By	Appd By
R2	REV'D GUY WIRE SIZE AT 207'±ELEV. WAS 3/16EHS	4-6-94	RKB	KTL	TS
R1	REV'D EIA-222-D TO EIA-222-E	9-10-91	RKB	KTL	TS

ROHN

Scale: NONE	By	Date
Drawn:	GPW	9-01-87
Checked:	WRF	9-18-87
App. Eng.:	RAM	9-30-87
App. Sales:	AE	2-12-88

Title: GUYING DETAILS FOR 220'-300' 55G TOWERS 90 MPH BASIC WIND SPEED

ENG. FILE:

DRAWING NO.: C870497 R2

PARTS LIST FOR #55G GUYED TOWERS
90 MPH Basic Wind Speed (No Ice)

Tower Height	55G	BPC55G w/3/4X12PP	APL55G	SA253UA	GA55GD	G.W. 3/16" EHS	G.W. 1/4" EHS	G.W. 5/16" EHS	BG2142	BG2144	BG2146	5/16" THH	3/8" THH	7/16" THH	3/8TBE&E	1/2TBE&J	5/8TBE&J	GAC 303	GAC345501	GAC565501	AGKE	BGKE
220′	22	1	1	3	6	1925′	800′	900′	24	6	6	24	6	6	6	9	3	3	3		2	2
230′	23	1	1	3	6	2000′	850′	925′	24	6	6	24	6	6	6	9	3	3	3		2	2
240′	24	1	1	3	7	2600′	900′	1000′	30	6	6	30	6	6	9	9	3	3	3		2	2
250′	25	1	1	3	7	2700′	925′	1025′	30	6	6	30	6	6	9	9	3	3	3		2	2
260′	26	1	1	3	7	2825′	1000′	1050′	30	6	6	30	6	6	9	9	3	3	3		2	2
270′	27	1	1	3	8	3625′	1025′	1100′	36	6	6	36	6	6	9		15	3		3	2	2
280′	28	1	1	3	8	2850′	2325′	1150′	30	12	6	30	12	6	9		15	3		3	2	2
290′	29	1	1	3	8	2925′	2350′	1175′	30	12	6	30	12	6	9		15	3		3	2	2
300′	30	1	1	3	8	3175′	1000′	2350′	30	6	12	30	6	12	9		15	3		3	2	2

Items shown above are necessary for a complete “ground” guyed tower. (Note: Cable clamps and extra wire have been provided for turnbuckle safety requirements.)

Anchor grounding (AGKE) kit, along with appropriate ground clamps, and base grounding (BGKE) kits, as recommended by EIA, are included with the tower material.

Installation information and a safety package (part number ACWS) are also included with the tower material. The safety package consists of one anti-climb warning sign and two Danger - Watch for Wires labels along with other printed safety information.

All types of antenna installations should be thoroughly inspected by qualified personnel and re-marked with hazard and warning labels at least twice a year to insure safety and proper performance.

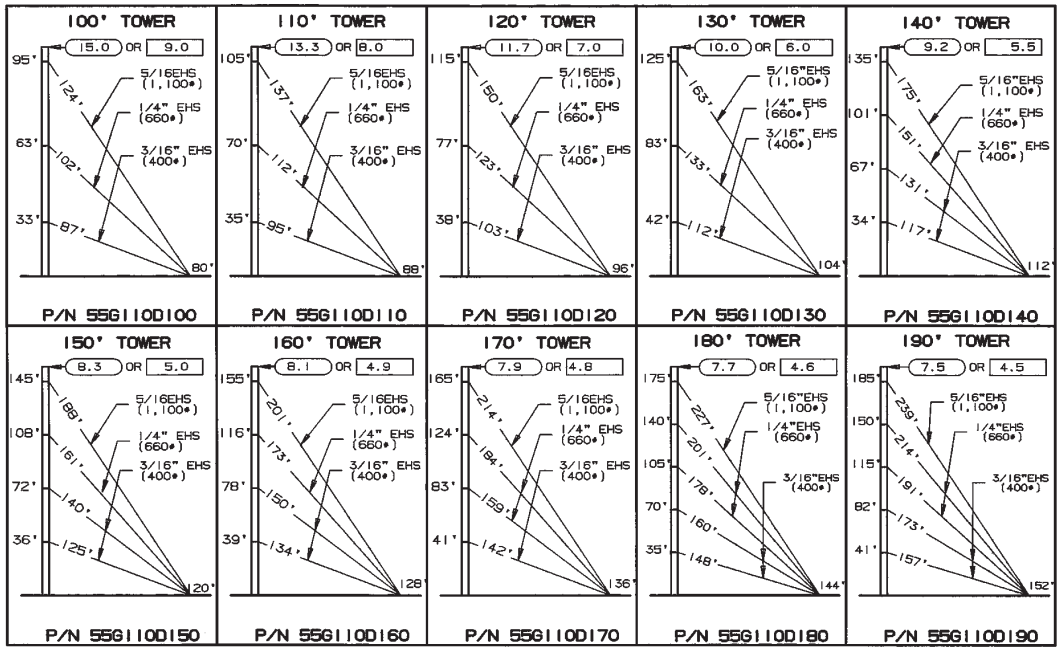

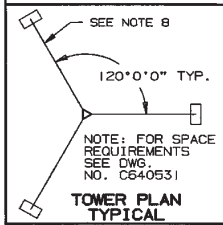

TOWER PLAN TYPICAL

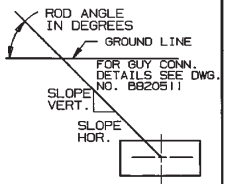

ANCHOR ROD SLOPE

GENERAL NOTES

1. TOWER DESIGNS ARE IN ACCORDANCE WITH APPROVED NATIONAL STANDARD ANSI/EIA-222-E-1991 (NO ICE).
2. ▭ ALLOWABLE PROJ. AREA (SQ. FT.) FOR ROUND MEMBER ANTENNAS. ▭ ALLOWABLE PROJ. AREA (SQ. FT.) FOR FLAT MEMBER ANTENNAS.
3. EQUIVALENT FLAT-PLATE ANTENNA AREAS, BASED ON EIA RS-222-C, MUST NOT EXCEED THE AREAS SHOWN FOR FLAT MEMBER ANTENNAS.
4. TOWER DESIGNS INCLUDE THREE SIDE ARMS, SYMMETRICALLY PLACED, HAVING A TOTAL EFFECTIVE PROJECTED AREA EQUAL TO 8.0 SQUARE FEET. FOR SIDE ARM DETAILS (P/N SA253UA). SEE DWG. C821682 LATEST REVISION.
5. DESIGNS ASSUME ONE 1/2" & ONE 7/8" DIA. LINE ON EACH TOWER FACE.
6. ANCHOR RADIUS IS FROM TOWER BASE TO INTERSECTION OF ROD WITH GROUND.
7. FOR GUY HARDWARE INSTALLATION DETAILS SEE DWG. A871382.
8. TOWER DESIGNS AND GUY CHORD LENGTHS SHOWN ARE BASED ON LEVEL GROUND. ADD 6 PERCENT TO CHORD LENGTHS (FOR SAG AND CONNECTIONS) FOR FINAL CUT LENGTHS. ( ) INDICATES INITIAL TENSION FOR GUY WIRES IN POUNDS AT 60 DEGREES FAHRENHEIT.
9. DO NOT INSTALL OR DISMANTLE TOWERS WITHIN FALLING DISTANCE OF ELECTRICAL AND/OR TELEPHONE LINES.
10. TOWER ERECTION AND DISMANTLING MUST BE BY QUALIFIED AND EXPERIENCED PERSONNEL.
11. TEMPORARY STEEL GUYS, WHEN REQUIRED DURING ERECTION OR DISMANTLING, MUST BE SUPPLIED AND INSTALLED BY THE ERECTOR.
12. INSTALL WARNING PLATE (P/N ACWS) IN A HIGHLY VISIBLE LOCATION.
13. ALL ANTENNA INSTALLATIONS MUST BE GROUNDED IN ACCORDANCE WITH LOCAL AND NATIONAL CODES.
14. EXTRA CABLE CLAMPS HAVE BEEN PROVIDED FOR TURNBUCKLE SAFETY REQUIREMENTS. FOR DETAILS SEE DWG. B680324 LATEST REVISION.

TOWER HT.	BASE PIER REF. DWG. C810621		ANCHOR DATA REF. DWG.: BLOCK-C620643; ROD-C660415						
	NO.	REAC. LBS.	BLOCK NO.	ROD NO.	ROD ANGLE	SLOPE HOR.	SLOPE VERT.	REAC. LBS. HOR.	REAC. LBS. VERT.
100'	CB2	10,770	4C	GAC3455	41.9	12	10.8	5,340	4,800
110'	CB2	11,330	4D	GAC3455	41.5	12	10.6	5,650	5,010
120'	CB2	11,880	4D	GAC3455	41.1	12	10.5	5,990	5,220
130'	CB2	12,470	4D	GAC3455	40.8	12	10.4	6,310	5,450
140'	CB2	13,640	4E	GAC3455	39.6	12	9.9	7,360	6,090
150'	CB2	14,370	4E	GAC3455	39.4	12	9.9	7,770	6,380
160'	CB2	15,190	4E	GAC3455	39.3	12	9.8	8,230	6,730
170'	CB2	16,150	4E	GAC3455	39.1	12	9.8	8,900	7,240
180'	CB2	17,650	6A	GAC5655	39.8	12	10.0	10,130	8,020
190'	CB2	18,700	6A	GAC5655	38.6	12	9.6	10,640	8,490

No.	Revision Description	Date	Rev By	Ckd By	Appd By
R1	EIA-222-E-1991 WAS EIA-222-D	12-9-91	RKB	WRC	TS

ROHN

Scale: NONE	By	Date
Drawn:	RKB	1-2-91
Checked:	KKG	1-28-91
App. Eng.:	TS	2-21-91
App. Sales:	AE	2-21-91

Title: GUYING DETAILS FOR 100'-190' 55G TOWERS 110 MPH BASIC WIND SPEED (NO ICE)

ENG. FILE:

DRAWING NO.: C902043 R1

Parts List P-610
(Replaces P-555)

Parts List for #55G Guyed Towers

July 1, 1995

110 MPH Basic Wind Speed (No Ice)

Tower Height	55G	APL55G	BPC55G w/ 3/4X12PP	SA253UA	GA55GD	G.W. 3/16" EHS	G.W. 1/4" EHS	G.W. 5/16" EHS	BG2142	BG2144	BG2146	5/16" THH	3/8" THH	7/16" THH	1/2TBE&J	5/8TBE&J	GAC 345501	GAC 565501	AGKE	BGKE
100'	10	1	1	3	3	300'	325'	400'	6	6	6	6	6	6	6	3	3		1	2
110'	11	1	1	3	3	325'	375'	450'	6	6	6	6	6	6	6	3	3		1	2
120'	12	1	1	3	3	350'	400'	500'	6	6	6	6	6	6	6	3	3		1	2
130'	13	1	1	3	3	375'	425'	525'	6	6	6	6	6	6	6	3	3		1	2
140'	14	1	1	3	4	875'	500'	575'	12	6	6	12	6	6	9	3	3		1	2
150'	15	1	1	3	4	900'	525'	600'	12	6	6	12	6	6	9	3	3		1	2
160'	16	1	1	3	4	950'	550'	650'	12	6	6	12	6	6	9	3	3		1	2
170'	17	1	1	3	4	500'	1175'	700'	6	12	6	6	12	6	9	3	3		1	2
180'	18	1	1	3	5	1000'	1225'	725'	12	12	6	12	12	6		15		3	1	2
190'	19	1	1	3	5	1175'	1425'	775'	12	12	6	12	12	6		15		3	1	2

Items shown above are necessary for a complete "ground" guyed tower. (Note: Cable clamps and extra wire have been provided for turnbuckle safety requirements.)

Anchor grounding (AGKE) kit, along with appropriate ground clamps, and base grounding (BGKE) kits, as recommended by EIA, are included with the tower material.

Installation information and a safety package (part number ACWS) are also included with the tower material. The safety package consists of one anti-climb warning sign and two Danger - Watch for Wires labels along with other printed safety information.

All types of antenna installations should be thoroughly inspected by qualified personnel and re-marked with hazard and warning labels at least twice a year to insure safety and proper performance.

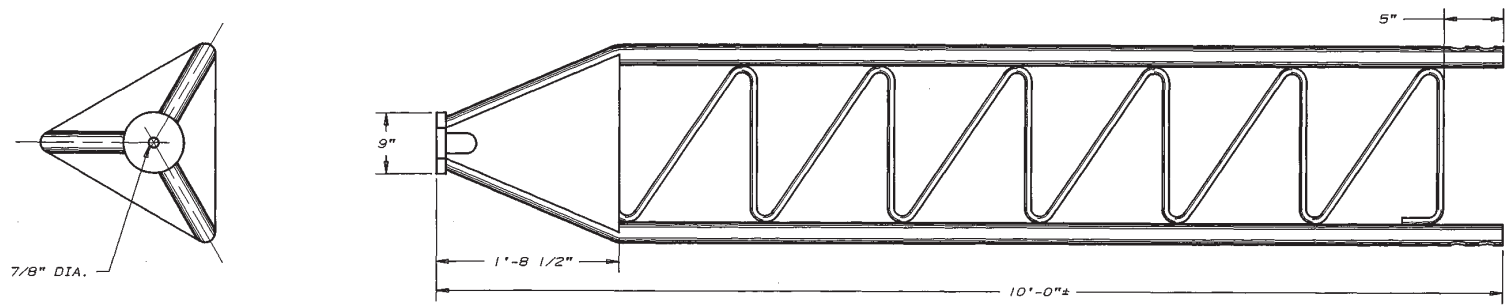

P/N 55TG SECTION

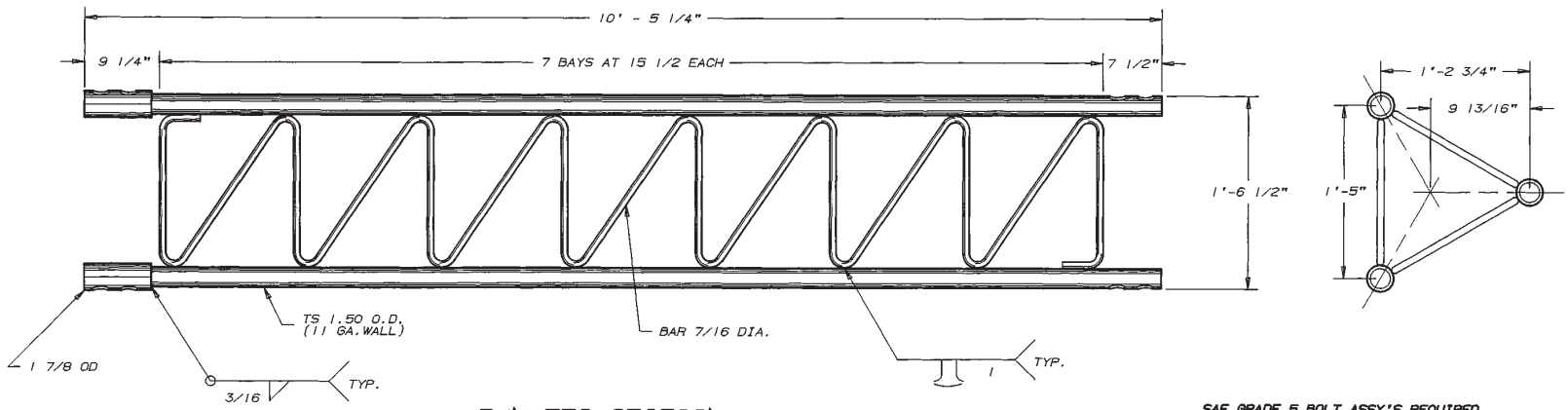

P/N 55G SECTION

SAE GRADE 5 BOLT ASSY'S REQUIRED
(6) 7/16" DIA. X 2 1/2" LG. (NC BOLTS)

SEC. >>	55G TOWER SECTION PROPERTIES		
ITEM	LEGS	BRACES	SECTION
SIZE	TS 1.5 ODX.120 WALL	BAR 7/16 DIA.	N/A
Fy	50.0	36.0	N/A
A	0.5203	0.1503	1.56
S	0.1664	0.0082	7.12
I	0.1248	0.0018	75.2
r	0.4897	0.1094	6.94
L	15.5	21.9	VARIES
K	1.0	0.70	1.0
KL/r	31.6	140.3	VARIES
C	18.6	1.52	N/A
T	17.2	N/A	N/A
M	N/A	N/A	21.1
W	1.77	0.512	9.50
Ws	56.0	39.0	95.0

NOMENCLATURE

A = CROSS SECTIONAL AREA (SQUARE INCHES)
C = COMPRESSION CAPACITY WITH 1/3 INCREASE IN ALLOWABLE STRESS (KIPS)
I = MOMENT OF INERTIA ABOUT CENTROIDAL AXIS (INCHES**4)
Fy = MINIMUM YIELD STRENGTH (KSI)
K = EFFECTIVE LENGTH FACTOR (DIMENSIONLESS)
L = UNBRACED LENGTH (INCHES)
M = MOMENT CAPACITY WITH 1/3 INCREASE IN ALLOWABLE STRESS (FT.-KIPS)
N/A= NOT APPLICABLE
S = ELASTIC SECTION MODULUS (INCHES**3)
T = TENSION CAPACITY WITH 1/3 INCREASE IN ALLOWABLE STRESS (KIPS)
r = RADIUS OF GYRATION (INCHES)
W = WEIGHT PER FOOT (POUNDS)
Ws = WEIGHT PER SECTION (POUNDS)

NOTE: CAPACITIES SHOWN ARE BASED ON ANSI/EIA-222-E-1991.

No.	Revision Description	Date	By
R9	REV'D EIA-222-D-1986 TO EIA-222-E-1991	9-10-91	RKB
R8	REDRAWN AND REVISED SPEC.	02/09/88	WDU

UNR-Rohn

Title: 55G SECTION ASSEMBLY

Scale: NONE

Drawn by: WDU 2/9/88

Checked by: GPW 02-25-88

Approved by Engineering: RAM 2-26-88

Approved by Production: Date

Approved by Sales: 2-26-88

Unless otherwise specified, dimensions are given in inches. Tolerances: Decimals ±, Fractions ±, Angles ±

Material / Finish / Weight

File Number

Drawing Number: C630655 R 9

BRUNING 41503

C640655-R6

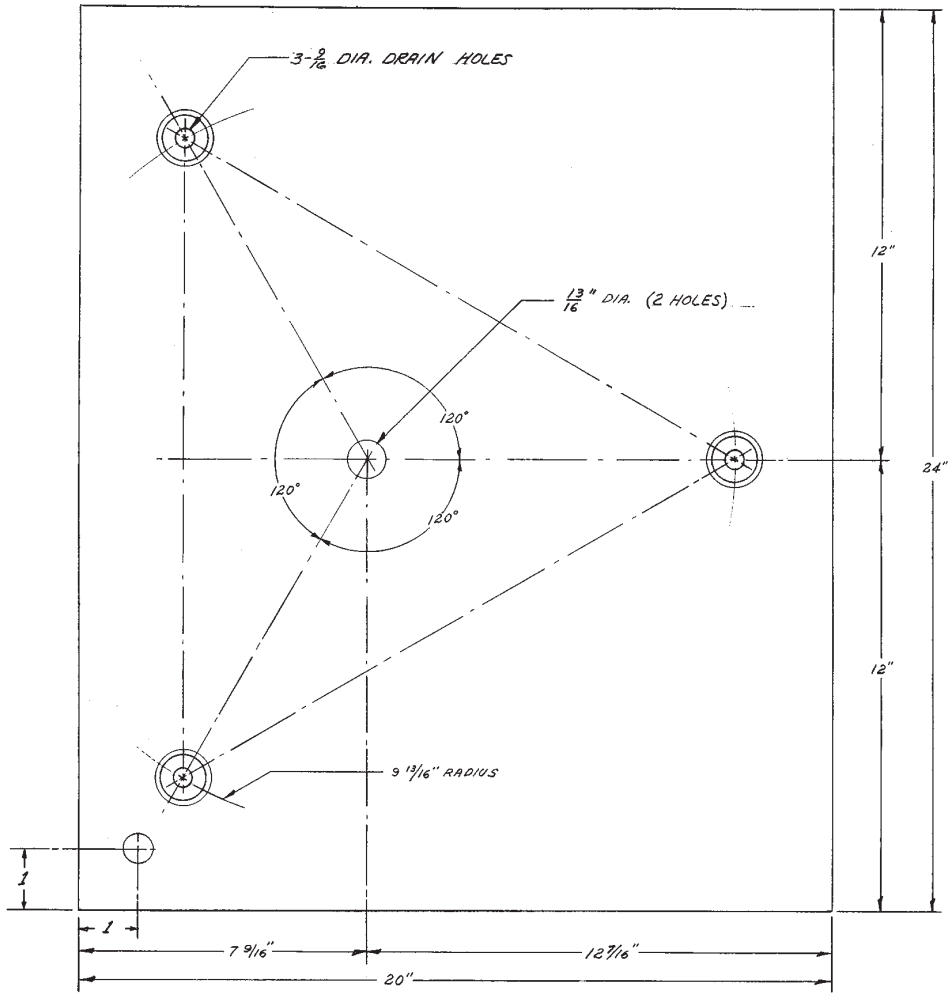

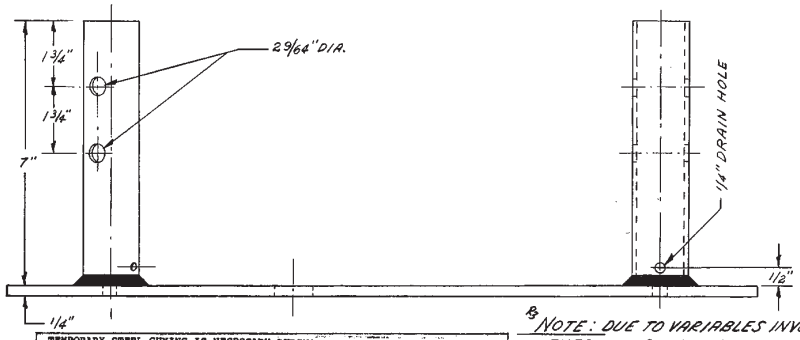

TEMPORARY STEEL GUYING IS NECESSARY DURING INSTALLATION AND DISMANTLING.

NOTE: AFTER GALVANIZING, CHECK DRAIN HOLES TO SEE THAT THEY ARE NOT PLUGGED.

BASE PLATE FOR CONCRETE PIER
(PART NO. BPC556)

NOTE: ® FOR USE WITH GUYED AND BRACKETED TOWERS ONLY.

NOTE: DUE TO VARIABLES INVOLVED IN ROOF AND OTHER INSTALLATIONS, IT SHALL BE THE CUSTOMER'S OR INSTALLER'S RESPONSIBILITY TO PROVIDE STRUCTURALLY ADEQUATE SUPPORTS FOR PIER & ANCHOR CONNECTIONS. IT MAY ALSO BE NECESSARY FOR THE CUSTOMER OR INSTALLER TO SECURE THE SERVICE OF A LOCAL ENGINEER TO DETERMINE THAT INSTALLATION COMPLIES WITH LOCAL BUILDING CODES.

R6	REV. TEMP. GUYING NOTE	12-6-88	EHM
R5	ADDED TEMP. GUYING NOTE	11-3-86	MBV
R4	DELETE EXCESS HOLES	12-31-79	
R3	ADDED NOTE	7-6-76	
R2	DRAIN HOLE WAS 3/8 DIA.	1-6-75	RDB
R1	ADDED NOTE INDICATED	1-31-74	JER

DRAWN A. BUENDIA
CHECKED
APPROVED
DATE 6-30-64
SCALE

CUSTOMER

TITLE: BASE PLATE FOR MODEL 55 TOWER

DRAWING NO. C640655-R6

ROHN MANUFACTURING
PEORIA, ILLINOIS

ILLINOIS B.P. 1006-H

ROHN™ Products

65G Tower

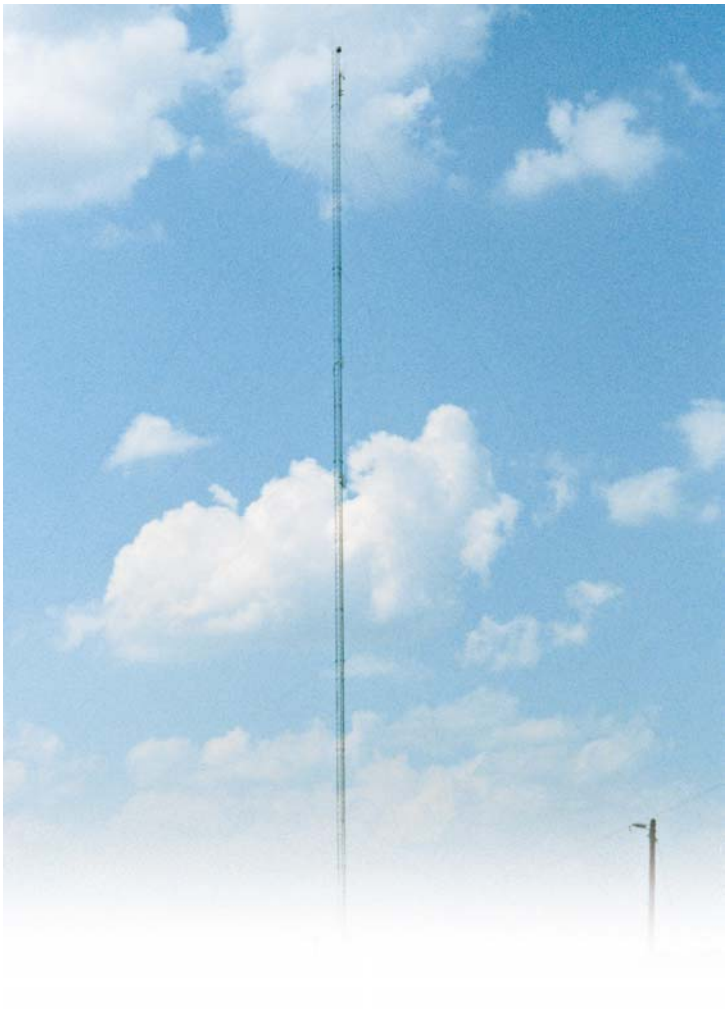

Products for a Growing World of Technology

Blank

December 1, 1996

Sheet D-2877
(Replaces D-2787)

65G TOWER

Part No.	Description	Wt.
65G	10′ tower section	173
⌘ 65ACL	10′ tower section w/anti-climb	338
⌘ 65GL*	10′ tower section w/guy lugs	178
⌘ 65TL*	10′ tower section w/lugs for torque arms	179
⌘ 65GH	10′ tower section	210
⌘ 65GHL*	10′ tower section w/guy lugs	215
⌘ 65GHTL*	10′ tower section w/lugs for torque arms	216
6520G	20′ tower section	330
⌘ 6520GL*	20′ tower section w/guy lugs	335
⌘ 6520TL*	20′ tower section w/lugs for torque arms	336
⌘ 6520GH	20′ tower section	390
⌘ 6520GHL*	20′ tower section w/guy lugs	395
⌘ 6520GHLH*	20′ tower section w/extra heavy guy lugs	430
⌘ 6520GHTL*	20′ tower section w/lugs for torque arms	396
⌘ 6520GHH	20′ extra heavy tower section	620
⌘ 6520DB	20′ double braced tower section	530
⌘ 6520DBGL*	20′ double braced tower section w/guy lugs	535
⌘ 6520DBTL*	20′ double braced tower section w/lugs for torque arms	535
⌘ 6520HDB	20′ double braced heavy tower section	563
⌘ 6520GHHDB	20′ double braced extra heavy tower section	770
⌘ 6520GHDBLH*	20′ double braced extra heavy tower section w/guy lugs	870
★ 65TG	10′ tapered base	150
★⌘ 65TGACL	10′ tapered base w/anti-climb	348
★⌘ 65TGH	10′ tapered base	180
★⌘ 65TGIAA	10′ tapered base for A4722B insulator	250
★⌘ 65TGIBA	10′ tapered base for A4197 insulator	230
★ 15/16X16PP	Pier pin (for 65TG or 65TGH - one required)	3
SB65G	5′ short base section for concrete	75
★ 5/8X12BB	Concrete base bolt w/double nuts	1
DP65A	Drainage plates (set of 3) (use when bolting section directly onto concrete)	9
65JBK	Joint bolt kit	4-1/2
CP4A	Cap plates (set of 3 w/nuts and bolts)	15
APL4HA	Beacon plate (leg mounted) and two cap plates w/nuts and bolts	15
APL1258UM	Mid beacon plate (1-1/4″ O.D. through 8″ O.D. legs)	30
GA65GD	Guy bracket assembly	30
SA253UA	Side arm assembly, 2-1/2′ to 3′ extension, with 2-1/4″ O.D. support tube	28
D1130	Side arm assembly	70
✦ TA656*	Channel torque arm, 6″	185
✦ TA658*	Channel torque arm, 8″	225
✦ DM654*	Face dish mount w/4″ (4-1/2″ O.D.) 5′ long standard pipe	98
✦ DM654TB*	Face dish mount w/4″ (4-1/2″ O.D.) 5′ long standard pipe and tie back angle	116
✦⌘ KY509	Leg dish mount w/2″ standard 5′ long standard pipe	72
✦ KY510	Leg dish mount w/4″ (4-1/2″ O.D.) 5′ long standard pipe	102
⌘ WPCC65	Work platform	35

If ANCO nuts are required, add "AN" to part number.
* Final digit(s) in part number determined by distance in feet from base to lug. See appropriate engineering drawing for elevations.
⌘ Available by special order only.
★ Towers mounted on this base must be guyed at all times.
✦ This item is not to be used without proper design consideration.

Do not install towers and masts near power lines. All towers or masts should be installed twice the height of installation away from power lines since every electrical wire must be considered dangerous. ROHN recommends anti-climb sections on all towers to prevent unauthorized persons from climbing towers. All towers should be installed and dismantled by experienced and trained personnel. All types of antenna installations should be thoroughly inspected by qualified personnel and re-marked with hazard and warning labels at least twice a year to insure safety and proper performance. All antenna installations must be grounded per local and national codes. The mixing of so-called interchangeable copies of ROHN products is dangerous and voids all data supplied by ROHN. Material used by the so-called copies are not the same quality and have not been tested or engineered by ROHN to conform to the same quality standards. Mixing of non-ROHN items may endanger the lives of your customers and cause serious tower failure and financial misfortune for all connected.

Prices available on request. Specifications subject to change without notice. F.O.B. Peoria, Illinois

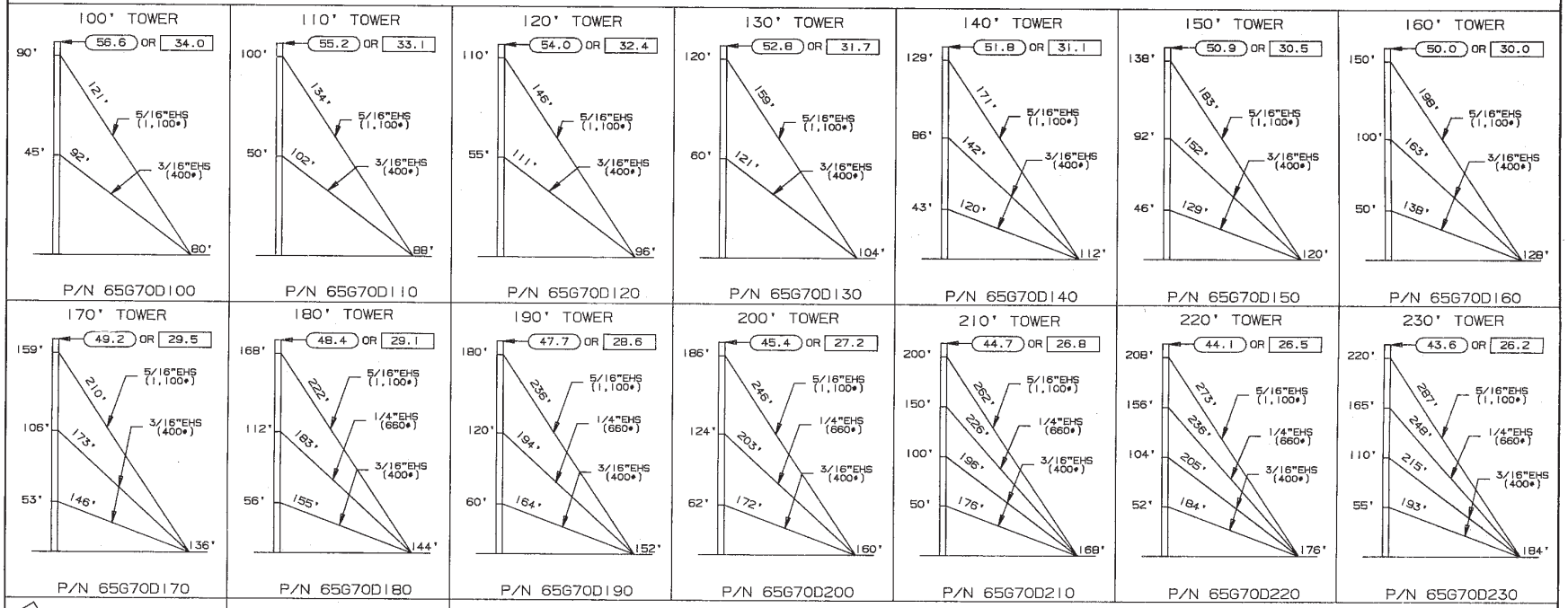

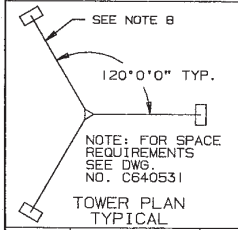

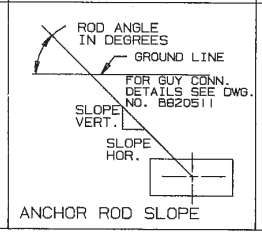

GENERAL NOTES

1. TOWER DESIGNS ARE IN ACCORDANCE WITH APPROVED NATIONAL STANDARD ANSI/EIA-222-E-1991 (NO ICE).
2. ⬭ ALLOWABLE PROJ. AREA (SQ. FT.) FOR ROUND MEMBER ANTENNAS. ▭ ALLOWABLE PROJ. AREA (SQ. FT.) FOR FLAT MEMBER ANTENNAS.
3. EQUIVALENT FLAT-PLATE ANTENNA AREAS, BASED ON EIA RS-222-C, MUST NOT EXCEED THE AREAS SHOWN FOR FLAT MEMBER ANTENNAS.
4. TOWER DESIGNS INCLUDE THREE SIDE ARMS, SYMMETRICALLY PLACED, HAVING A TOTAL EFFECTIVE PROJECTED AREA EQUAL TO 12.0 SQUARE FEET. FOR SIDE ARM DETAILS (P/N D1130). SEE DWG. C760571 LATEST REVISION.
5. DESIGNS ASSUME TWO 7/8" DIA. LINES ON EACH TOWER FACE.
6. TOWER DESIGNS, 200 FEET AND OVER, INCLUDE 2.0 SQUARE FEET OF EFFECTIVE PROJECTED AREA FOR A BEACON (DEDUCT ONE 7/8" LINE FOR BEACON).
7. ANCHOR RADIUS IS FROM TOWER BASE TO INTERSECTION OF ROD WITH GROUND.
8. TOWER DESIGNS AND GUY CHORD LENGTHS SHOWN ARE BASED ON LEVEL GROUND. ADD 6 PERCENT TO CHORD LENGTHS (FOR SAG AND CONNECTIONS) FOR FINAL CUT LENGTHS. ( ) INDICATES INITIAL TENSION FOR GUY WIRES IN POUNDS AT 60 DEGREES FAHRENHEIT.
9. DO NOT INSTALL OR DISMANTLE TOWERS WITHIN FALLING DISTANCE OF ELECTRICAL AND/OR TELEPHONE LINES.
10. TOWER ERECTION AND DISMANTLING MUST BE BY QUALIFIED AND EXPERIENCED PERSONNEL.
11. TEMPORARY STEEL GUYS, WHEN REQUIRED DURING ERECTION OR DISMANTLING, MUST BE SUPPLIED AND INSTALLED BY THE ERECTOR.
12. INSTALL WARNING PLATE (P/N ACWS) IN A HIGHLY VISIBLE LOCATION.
13. ALL ANTENNA INSTALLATIONS MUST BE GROUNDED IN ACCORDANCE WITH LOCAL AND NATIONAL CODES.
14. EXTRA CABLE CLAMPS HAVE BEEN PROVIDED FOR TURNBUCKLE SAFETY REQUIREMENTS. FOR DETAILS SEE DWG. B680324 LATEST REVISION.
15. FOR GUY HARDWARE INSTALLATION DETAILS SEE DWG. A871382.

TOWER HT.	BASE PIER REF. DWG. C610621		ANCHOR DATA REF. DWG.: BLOCK-C620643; ROD-C660415						
	NO.	REAC. LBS.	BLOCK NO.	ROD NO.	ROD ANGLE	SLOPE HOR.	SLOPE VERT.	REAC. LBS. HOR.	REAC. LBS. VERT.
100'	CB1	9,660	4B	GAC3455	44.8	12	11.9	3,690	3,660
110'	CB1	10,120	4B	GAC3455	44.9	12	11.9	3,820	3,800
120'	CB1	10,540	4B	GAC3455	44.9	12	11.9	3,970	3,950
130'	CB1	11,050	4B	GAC3455	44.8	12	11.9	4,140	4,110
140'	CB1	11,690	4C	GAC3455	43.3	12	11.3	4,630	4,360
150'	CB1	12,230	4C	GAC3455	43.2	12	11.3	4,850	4,550
160'	CB1	12,750	4C	GAC3455	43.0	12	11.2	5,070	4,730
170'	CB1	13,190	4C	GAC3455	42.9	12	11.1	5,250	4,870
180'	CB1	13,790	4D	GAC3455	42.8	12	11.1	5,510	5,100
190'	CB2	14,380	4D	GAC3455	42.7	12	11.1	5,760	5,320
200'	CB2	14,830	4D	GAC3455	42.5	12	11.0	5,970	5,470
210'	CB2	15,780	4D	GAC3455	41.1	12	10.5	6,690	5,840
220'	CB2	16,290	4D	GAC3455	40.9	12	10.4	6,920	6,000
230'	CB2	16,850	4E	GAC3455	40.8	12	10.4	7,180	6,190

No.	Revision Description	Date	Rev By	Ckd By	Appd By
R1	REV'D EIA-222-D TO EIA-222-E	7-24-92	RKB	WMN	TS

ROHN

Scale: NONE	By	Date
Drawn:	GPM/WDL	9-1-87
Checked:	WRF	9-21-87
App. Eng.:	RAM	9-30-87
App. Sales:	AE	2-12-88

Title: GUYING DETAILS FOR 100'-230' 65G TOWERS 70 MPH BASIC WIND SPEED (NO ICE)

ENG. FILE:

DRAWING NO.: C870502 R1

July 1, 1995

Parts List P-601
(Replaces P-567)

PARTS LIST FOR #65G GUYED TOWERS
70 MPH Basic Wind Speed (No Ice)

Tower Height	GA65GD	G.W. 3/16″ EHS	G.W. 1/4″ EHS	G.W. 5/16″ EHS	BG2142	BG2144	BG2146	5/16″ THH	3/8″ THH	7/16″ THH	1/2TBE&J	5/8TBE&J	GAC345501
100′	2			400′			6		6	6	3	3	3
110′	2	325′		450′	6		6	6		6	3	3	3
120′	2	375′		475′	6		6	6		6	3	3	3
130′	2	400′		525′	6		6	6		6	3	3	3
140′	3	850′		550′	12		6	12		6	6	3	3
150′	3	900′		600′	12		6	12		6	6	3	3
160′	3	1000′		650′	12		6	12		6	6	3	3
170′	3	1025′		675′	12		6	12		6	6	3	3
180′	3	500′	600′	725′	6	6	6	6	6	6	6	3	3
190′	3	525′	625′	775′	6	6	6	6	6	6	6	3	3
200′	3	550′	650′	800′	6	6	6	6	6	6	6	3	3
210′	4	1200′	725′	850′	12	6	6	12	6	6	9	3	3
220′	4	1250′	750′	875′	12	6	6	12	6	6	9	3	3
230′	4	1300′	800′	925′	12	6	6	12	6	6	9	3	3

Items shown above, plus one 65TG, one 15X16PP, one APL4HA, three D1130, and required number of 6520G and 65G sections, are necessary for a complete ‘ground’ guyed tower. (Note: Cable clamps and extra wire have been provided for turnbuckle safety requirements.)

One or two anchor grounding (AGKE) kit, along with appropriate ground clamps, and two base grounding (BGKE) kits, as recommended by EIA, are included with the tower material.

Installation information and a safety package (part number ACWS) are also included with the tower material. The safety package consists of one anti-climb warning sign and two Danger - Watch for Wires labels along with other printed safety information.

All types of antenna installations should be thoroughly inspected by qualified personnel and re-marked with hazard and warning labels at least twice a year to insure safety and proper performance.

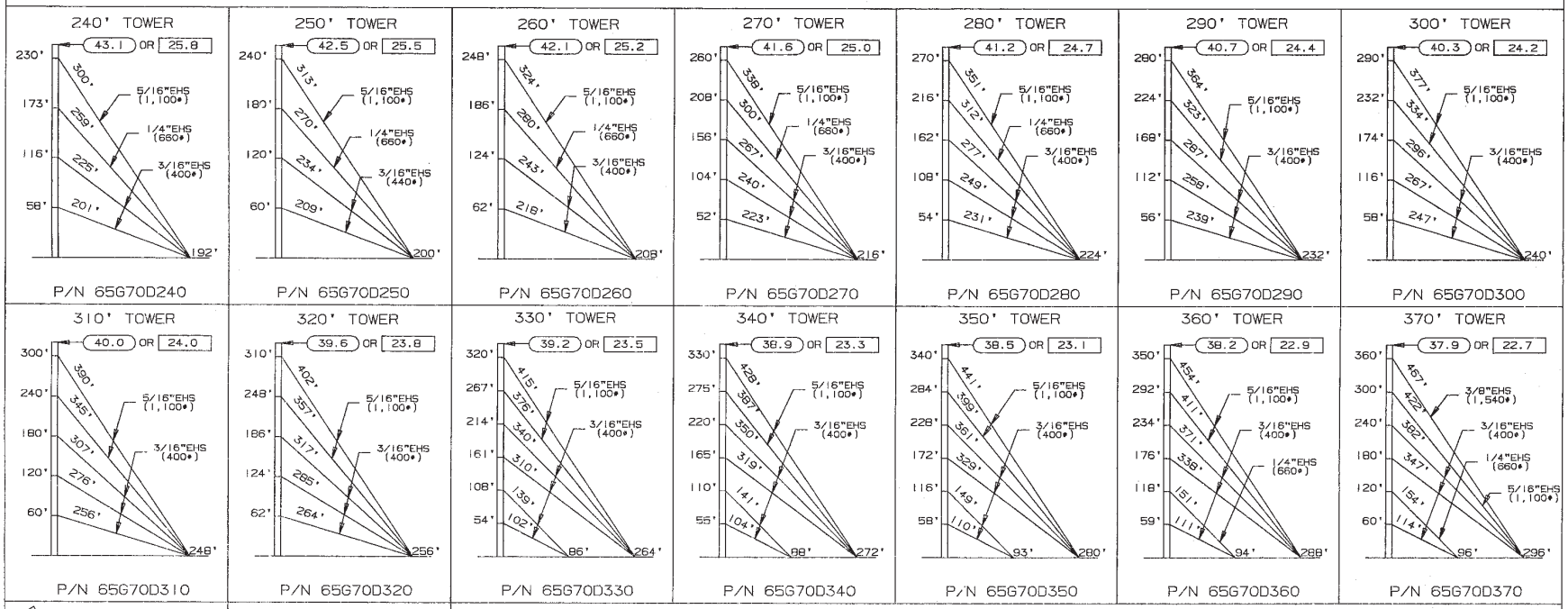

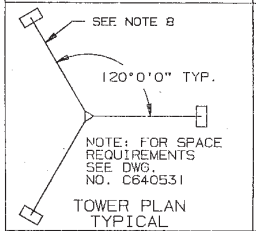

TOWER PLAN TYPICAL

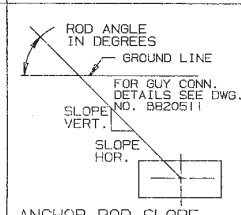

ANCHOR ROD SLOPE

GENERAL NOTES

1. TOWER DESIGNS ARE IN ACCORDANCE WITH APPROVED NATIONAL STANDARD ANSI/EIA-222-E-1991 (NO ICE).
2. ▭ ALLOWABLE PROJ. AREA (SQ. FT.) FOR ROUND MEMBER ANTENNAS. ▭ ALLOWABLE PROJ. AREA (SQ. FT.) FOR FLAT MEMBER ANTENNAS.
3. EQUIVALENT FLAT-PLATE ANTENNA AREAS, BASED ON EIA RS-222-C, MUST NOT EXCEED THE AREAS SHOWN FOR FLAT MEMBER ANTENNAS.
4. TOWER DESIGNS INCLUDE THREE SIDE ARMS, SYMMETRICALLY PLACED, HAVING A TOTAL EFFECTIVE PROJECTED AREA EQUAL TO 12.0 SQUARE FEET. FOR SIDE ARM DETAILS (P/N D1130). SEE DWG. C760571 LATEST REVISION.
5. DESIGNS ASSUME TWO 7/8" DIA. LINES ON EACH TOWER FACE.
6. TOWER DESIGNS, 200 FEET AND OVER, INCLUDE 2.0 SQUARE FEET OF EFFECTIVE PROJECTED AREA FOR A BEACON (DEDUCT ONE 7/8" LINE FOR BEACON).
7. ANCHOR RADIUS IS FROM TOWER BASE TO INTERSECTION OF ROD WITH GROUND.
8. TOWER DESIGNS AND GUY CHORD LENGTHS SHOWN ARE BASED ON LEVEL GROUND. ADD 6 PERCENT TO CHORD LENGTHS (FOR SAG AND CONNECTIONS) FOR FINAL CUT LENGTHS. ( ) INDICATES INITIAL TENSION FOR GUY WIRES IN POUNDS AT 60 DEGREES FAHRENHEIT.
9. DO NOT INSTALL OR DISMANTLE TOWERS WITHIN FALLING DISTANCE OF ELECTRICAL AND/OR TELEPHONE LINES.
10. TOWER ERECTION AND DISMANTLING MUST BE BY QUALIFIED AND EXPERIENCED PERSONNEL.
11. TEMPORARY STEEL GUYS, WHEN REQUIRED DURING ERECTION OR DISMANTLING, MUST BE SUPPLIED AND INSTALLED BY THE ERECTOR.
12. INSTALL WARNING PLATE (P/N ACWS) IN A HIGHLY VISIBLE LOCATION.
13. ALL ANTENNA INSTALLATIONS MUST BE GROUNDED IN ACCORDANCE WITH LOCAL AND NATIONAL CODES.
14. EXTRA CABLE CLAMPS HAVE BEEN PROVIDED FOR TURNBUCKLE SAFETY REQUIREMENTS. FOR DETAILS SEE DWG. B680324 LATEST REVISION.
15. FOR GUY HARDWARE INSTALLATION DETAILS SEE DWG. A871382.

TOWER HT.	BASE PIER REF. DWG. C610621		INNER ANCHOR DATA REF. DWG.: BLOCK-C620643; ROD-C660415							OUTER ANCHOR DATA REF. DWG.: BLOCK-C620643; ROD-C660415						
	NO.	REAC. LBS.	BLOCK NO.	ROD NO.	ROD ANGLE	SLOPE HOR.	SLOPE VERT.	REAC. LBS. HOR.	REAC. LBS. VERT.	BLOCK NO.	ROD NO.	ROD ANGLE	SLOPE HOR.	SLOPE VERT.	REAC. LBS. HOR.	REAC. LBS. VERT.
240'	CB2	17,350	4E	GAC3455	41.1	12	10.5	7,350	6,410							
250'	CB2	17,850	4E	GAC3455	40.9	12	10.4	7,590	6,580							
260'	CB2	18,430	4E	GAC3455	40.7	12	10.3	7,900	6,790							
270'	CB2	19,420	4E	GAC3455	39.7	12	10.0	8,700	7,230							
280'	CB2	20,020	4E	GAC3455	39.6	12	10	8,990	7,450							
290'	CB2	20,870	6A	GAC5655	39.5	12	10	9,610	7,930							
300'	CB2	21,410	6A	GAC5655	39.4	12	10	9,860	8,110							
310'	CB3	22,060	6A	GAC5655	39.4	12	10	10,170	8,350							
320'	CB3	22,640	6A	GAC5655	39.3	12	9.8	10,430	8,540							
330'	CB3	26,130	4A	GAC303	42.6	12	11.0	2,310	2,120	6A	GAC5655	43.7	12	11.4	8,740	8,340
340'	CB3	26,830	4A	GAC303	42.7	12	11.1	2,360	2,180	6A	GAC5655	43.5	12	11.4	9,000	8,540
350'	CB3	27,620	4A	GAC303	42.5	12	11.0	2,540	2,330	6A	GAC5655	43.5	12	11.4	9,160	8,700
360'	CB3	28,670	4A	GAC303	44.8	12	11.9	2,650	2,630	6A	GAC5655	43.6	12	11.4	9,340	8,890
370'	CB3	29,900	4A	GAC303	45.0	12	12	2,670	2,660	6A	GAC5655	43.6	12	11.4	9,960	9,480

No.	Revision Description	Date	Rev By	Ckd By	Appd By
R2	REV'D 90 TO 70 IN TITLEBLOCK	11/10/92	CSR	WMN	TS
R1	REV'D EIA-222-D TO EIA-222-E-1991	7-24-92	RKB	WMN	TS

ROHN

Scale: NONE	By	Date
Drawn:	GPW/WDL	9-1-87
Checked:	WRF	9-21-87
App. Eng.:	RAW	10-1-87
App. Sales:	AE	2-12-87

Title: GUYING DETAILS FOR 240'-370' 65G TOWERS 70 MPH BASIC WIND SPEED (NO ICE)

ENG. FILE:

DRAWING NO.: C870503 R2

July 1, 1995

Parts List P-602
(Replaces P-568)

PARTS LIST FOR #65G GUYED TOWERS
70 MPH Basic Wind Speed (No Ice)

Tower Height	GA65GD	G.W. 3/16″ EHS	G.W. 1/4″ EHS	G.W. 5/16″ EHS	G.W. 3/8″ EHS	BG2142	BG2144	BG2146	BG2147	5/16″ THH	3/8″ THH	7/16″ THH	1/2″ THH	3/8TBE&E	1/2TBE&E	1/2TBE&J	5/8TBE&J	GAC303	GAC3455	GAC565501
240′	4	1375′	1000′	975′		12	6	6		12	6	6				9	3		3	
250′	4	1425′	1000′	1000′		12	6	6		12	6	6				9	3		3	
260′	4	1500′	1000′	1050′		12	6	6		12	6	6				9	3		3	
270′	5	2325′	1000′	1075′		18	6	6		18	6	6				12	3		3	
280′	5	2500′	1000′	1125′		18	6	6		18	6	6				12	3		3	
290′	5	2500′		2200′		18		12		18		12					15			3
300′	5	2775′		2275′		18		12		18		12					15			3
310′	5	2775′		2350′		18		12		18		12					15			3
320′	5	2800′		2425′		18		12		18		12					15			3
330′	6	2850′		2525′		24		12		24		12		6			12	3		3
340′	6	2925′		2600′		24		12		24		12		6			12	3		3
350′	6	3125′		2675′		24		12		24		12		6			12	3		3
360′	6	2625′	500′	2775′		18	6	12		18	6	12		3	3		12	3		3
370′	6	2750′	500′	1350′	1500′	18	6	6	6	18	6	6	6	3	3		12	3		3

Items shown above, plus one 65TG, one 15X16PP, one APL4HA, one APL1258UM (towers over 350′), three D1130, and required number of 6520G and 65G sections, are necessary for a complete ‘ground’ guyed tower. (Note: Cable clamps and extra wire have been provided for turnbuckle safety requirements.)

One or two anchor grounding (AGKE) kits, along with appropriate ground clamps, and two base grounding (BGKE) kits, as recommended by EIA, are included with the tower material.

Installation information and a safety package (part number ACWS) are also included with the tower material. The safety package consists of one anti-climb warning sign and two Danger - Watch for Wires labels along with other printed safety information.

All types of antenna installations should be thoroughly inspected by qualified personnel and re-marked with hazard and warning labels at least twice a year to insure safety and proper performance.

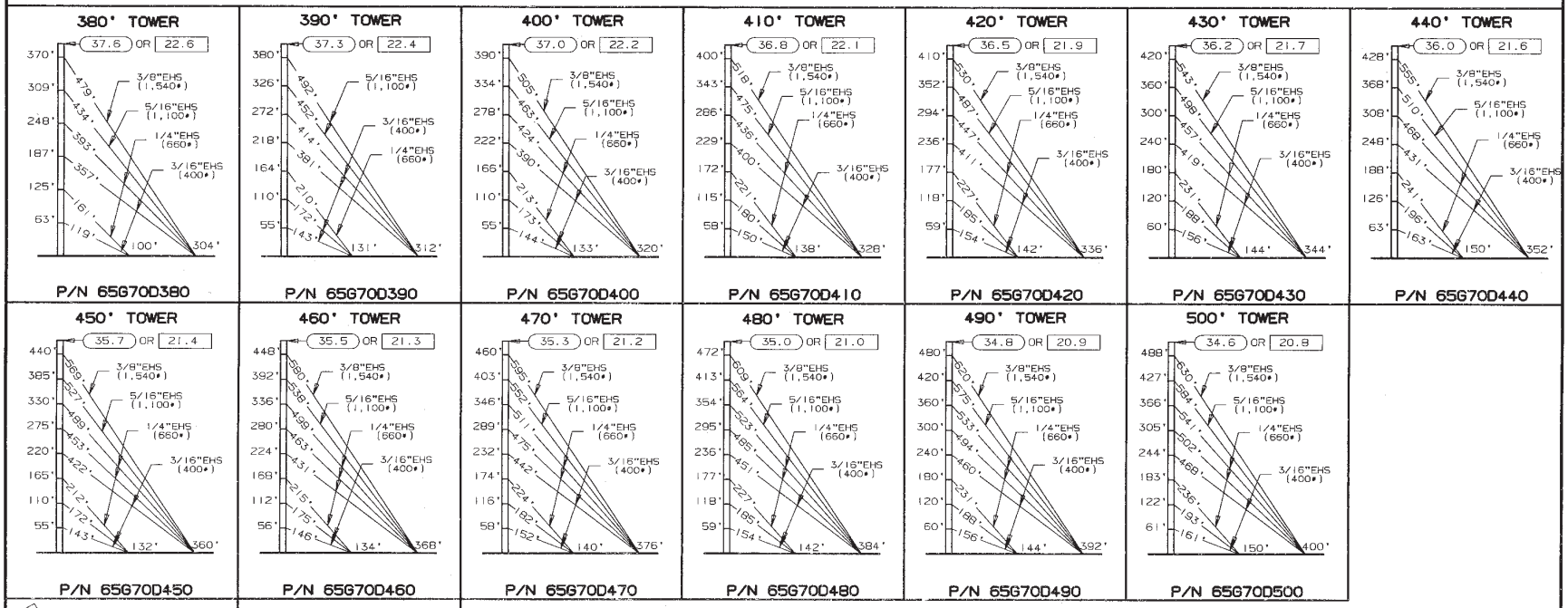

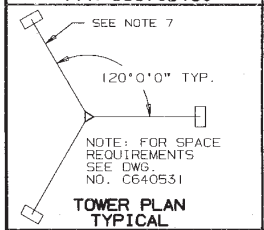

TOWER PLAN TYPICAL

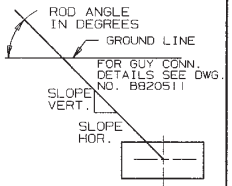

ANCHOR ROD SLOPE

GENERAL NOTES

1. TOWER DESIGNS ARE IN ACCORDANCE WITH APPROVED NATIONAL STANDARD ANSI/EIA-222-E-1991 (NO ICE).
2. ▭ ALLOWABLE PROJ. AREA (SQ. FT.) FOR ROUND MEMBER ANTENNAS. ▭ ALLOWABLE PROJ. AREA (SQ. FT.) FOR FLAT MEMBER ANTENNAS.
3. EQUIVALENT FLAT-PLATE ANTENNA AREAS, BASED ON EIA RS-222-C, MUST NOT EXCEED THE AREAS SHOWN FOR FLAT MEMBER ANTENNAS.
4. TOWER DESIGNS INCLUDE THREE SIDE ARMS, SYMMETRICALLY PLACED, HAVING A TOTAL EFFECTIVE PROJECTED AREA EQUAL TO 12.0 SQUARE FEET. FOR SIDE ARM DETAILS (P/N D1130). SEE DWG. C760571 LATEST REVISION.
5. DESIGNS ASSUME TWO 7/8" DIA. LINES ON EACH TOWER FACE.
6. TOWER DESIGNS, 200 FEET AND OVER, INCLUDE 2.0 SQUARE FEET OF EFFECTIVE PROJECTED AREA FOR A BEACON (DEDUCT ONE 7/8" LINE FOR BEACON).
7. ANCHOR RADIUS IS FROM TOWER BASE TO INTERSECTION OF ROD WITH GROUND.
8. TOWER DESIGNS AND GUY CHORD LENGTHS SHOWN ARE BASED ON LEVEL GROUND. ADD 6 PERCENT TO CHORD LENGTHS (FOR SAG AND CONNECTIONS) FOR FINAL CUT LENGTHS. ( ) INDICATES INITIAL TENSION FOR GUY WIRES IN POUNDS AT 60 DEGREES FAHRENHEIT.
9. DO NOT INSTALL OR DISMANTLE TOWERS WITHIN FALLING DISTANCE OF ELECTRICAL AND/OR TELEPHONE LINES.
10. TOWER ERECTION AND DISMANTLING MUST BE BY QUALIFIED AND EXPERIENCED PERSONNEL.
11. TEMPORARY STEEL GUYS, WHEN REQUIRED DURING ERECTION OR DISMANTLING, MUST BE SUPPLIED AND INSTALLED BY THE ERECTOR.
12. INSTALL WARNING PLATE (P/N ACWS) IN A HIGHLY VISIBLE LOCATION.
13. ALL ANTENNA INSTALLATIONS MUST BE GROUNDED IN ACCORDANCE WITH LOCAL AND NATIONAL CODES.
14. EXTRA CABLE CLAMPS HAVE BEEN PROVIDED FOR TURNBUCKLE SAFETY REQUIREMENTS. FOR DETAILS SEE DWG. B680324 LATEST REVISION.
15. FOR GUY HARDWARE INSTALLATION DETAILS SEE DWG. A871382.

TOWER HT.	BASE PIER REF. DWG. C610621		INNER ANCHOR DATA REF. DWG.: BLOCK-C620643; ROD-C660415							OUTER ANCHOR DATA REF. DWG.: BLOCK-C620643; ROD-C660415						
	NO.	REAC. LBS.	BLOCK NO.	ROD NO.	ROD ANGLE	SLOPE HOR.	SLOPE VERT.	REAC. LBS. HOR.	REAC. LBS. VERT.	BLOCK NO.	ROD NO.	ROD ANGLE	SLOPE HOR.	SLOPE VERT.	REAC. LBS. HOR.	REAC. LBS. VERT.
380'	CB3	31,000	4A	GAC303	44.7	12	11.9	2,830	2,790	6A	GAC5655	43.5	12	11.4	10,430	9,900
390'	CB3	31,510	4A	GAC303	41.7	12	10.7	3,860	3,430	6A	GAC5655	44.4	12	11.8	9,500	9,300
400'	CB4	33,190	4B	GAC3455	41.6	12	10.6	3,970	3,520	6B	GAC5655	44.3	12	11.7	10,400	10,140
410'	CB4	34,010	4B	GAC3455	41.7	12	10.7	4,110	3,670	6B	GAC5655	44.3	12	11.7	10,590	10,320
420'	CB4	34,770	4B	GAC3455	41.7	12	10.7	4,240	3,780	6B	GAC5655	44.3	12	11.7	10,770	10,490
430'	CB4	35,540	4B	GAC3455	41.8	12	10.7	4,290	3,840	6B	GAC5655	44.2	12	11.7	11,060	10,740
440'	CB4	36,460	4B	GAC3455	41.6	12	10.7	4,550	4,040	6B	GAC5655	44.2	12	11.7	11,240	10,930
450'	CB4	37,690	4A	GAC303	41.7	12	10.7	3,790	3,370	6C	GAC5655	43.0	12	11.2	13,120	12,240
460'	CB4	38,450	4A	GAC303	40.6	12	10.3	3,830	3,290	6C	GAC5655	42.6	12	11	13,790	12,670
470'	CB4	39,280	4B	GAC3455	41.6	12	10.6	4,040	3,590	6C	GAC5655	43.0	12	11.2	13,570	12,650
480'	CB4	40,100	4B	GAC3455	41.8	12	10.7	4,120	3,680	6C	GAC5655	43.0	12	11.2	13,850	12,900
490'	CB4	40,800	4B	GAC3455	41.9	12	10.8	4,170	3,750	6C	GAC5655	42.9	12	11.1	14,100	13,080
500'	CB4	41,340	4B	GAC3455	41.3	12	10.5	4,230	3,720	6D	GAC5655	42.8	12	11.1	14,350	13,270

No.	Revision Description	Date	Rev By	Ckd By	Appd By
R1	REV'D GENERAL NOTES	2-24-93	RKB		

ROHN

Scale: NONE	By	Date
Drawn:	CPM/RDD	9-1-87
Checked:	WRF	9-21-87
App. Eng.:	RAM	10-1-87
App. Sales:	AE	2-12-88

Title: GUYING DETAILS FOR 380'-500' 65G TOWERS 70 MPH BASIC WIND SPEED (NO ICE)

ENG. FILE:

DRAWING NO.: C870504 R1

July 1, 1995

Parts List P-603
(Replaces P-575)

PARTS LIST FOR #65G GUYED TOWERS
70 MPH Basic Wind Speed (No Ice)

Tower Height	GA65GD	G.W. 3/16" EHS	G.W. 1/4" EHS	G.W. 5/16" EHS	G.W. 3/8" EHS	BG2142	BG2144	BG2146	BG2147	5/16" THH	3/8" THH	7/16" THH	1/2" THH	3/8TBE&E	1/2TBE&E	1/2TBE&J	5/8TBE&J	GAC303	GAC3455	GAC565501
380′	6	1525′	1775′	1375′	1400′	12	12	6	6	12	12	6	6	3	3		12	3		3
390′	7	3650′	725′	3025′		24	6	12		24	6	12		6	3		12	3		3
400′	7	2325′	2225′	1475′	1625′	18	12	6	6	18	12	6	6			9	12		3	3
410′	7	2325′	2250′	1525′	1650′	18	12	6	6	18	12	6	6			9	12		3	3
420′	7	2400′	2250′	1550′	1700′	18	12	6	6	18	12	6	6			9	12		3	3
430′	7	2450′	2250′	1600′	1750′	18	12	6	6	18	12	6	6			9	12		3	3
440′	7	2675′	2275′	1625′	1775′	18	12	6	6	18	12	6	6			9	12		3	3
450′	8	2350′	3725′	1700′	1825′	18	18	6	6	18	18	6	6	6	3		15	3		3
460′	8	1025′	5250′	1725′	1850′	12	24	6	6	12	24	6	6	6	3		15	3		3
470′	8	2500′	4000′	1775′	1900′	18	18	6	6	18	18	6	6			9	15		3	3
480′	8	2675′	4000′	1800′	1950′	18	18	6	6	18	18	6	6			9	15		3	3
490′	8	2675′	4000′	1850′	1975′	18	18	6	6	18	18	6	6			9	15		3	3
500′	8	2675′	4250′	1875′	2025′	18	18	6	6	18	18	6	6			9	15		3	3

Items shown above, plus one 65TG, one 15X16PP, one APL4HA, one APL1258UM (towers over 350′), three D1130, and required number of 6520G and 65G sections, are necessary for a complete 'ground' guyed tower. (Note: Cable clamps and extra wire have been provided for turnbuckle safety requirements.)

One or two anchor grounding (AGKE) kits, along with appropriate ground clamps, and two base grounding (BGKE) kits, as recommended by EIA, are included with the tower material.

Installation information and a safety package (part number ACWS) are also included with the tower material. The safety package consists of one anti-climb warning sign and two Danger - Watch for Wires labels along with other printed safety information.

All types of antenna installations should be thoroughly inspected by qualified personnel and re-marked with hazard and warning labels at least twice a year to insure safety and proper performance.

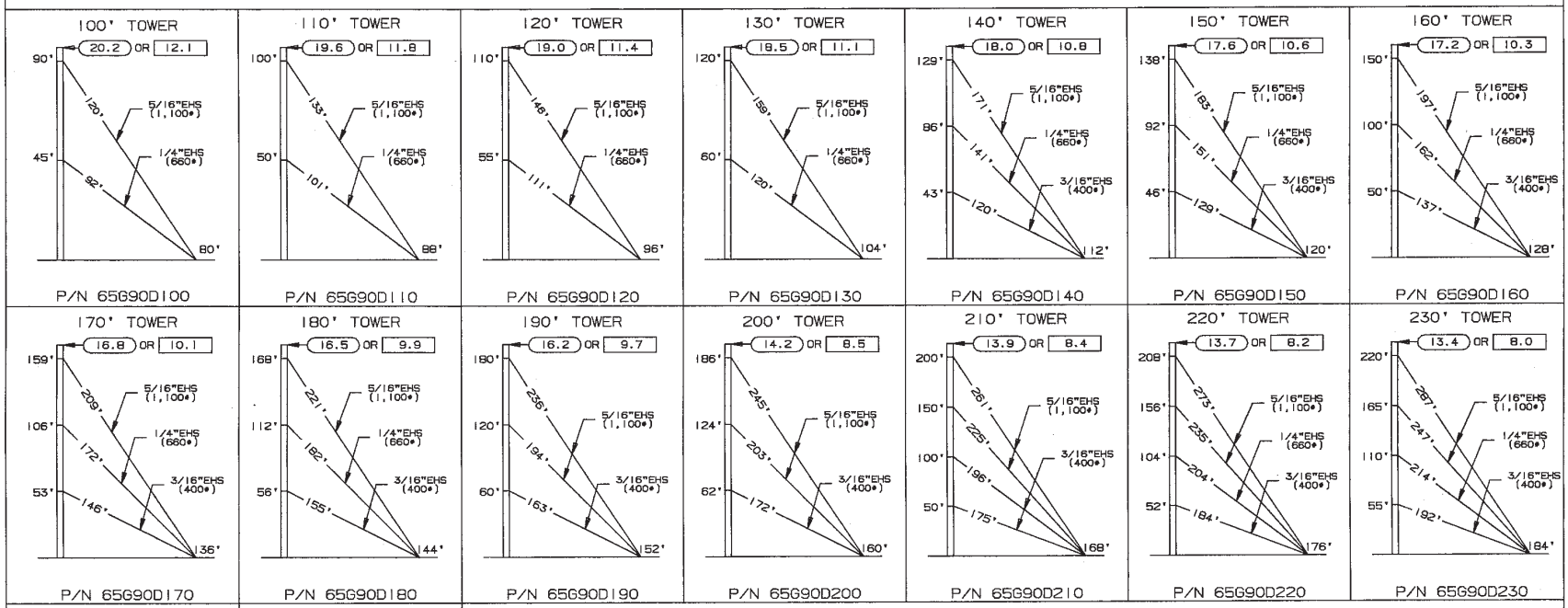

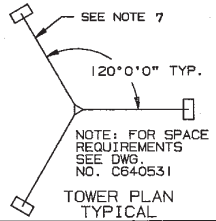

TOWER PLAN TYPICAL

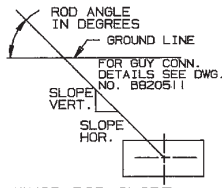

ANCHOR ROD SLOPE

GENERAL NOTES

1. TOWER DESIGNS ARE IN ACCORDANCE WITH APPROVED NATIONAL STANDARD ANSI/EIA-222-E-1991 (NO ICE).
2. ▭ ALLOWABLE PROJ. AREA (SQ. FT.) FOR ROUND MEMBER ANTENNAS.
3. ▭ ALLOWABLE PROJ. AREA (SQ. FT.) FOR FLAT MEMBER ANTENNAS. EQUIVALENT FLAT-PLATE ANTENNA AREAS, BASED ON EIA RS-222-C, MUST NOT EXCEED THE AREAS SHOWN FOR FLAT MEMBER ANTENNAS.
4. TOWER DESIGNS INCLUDE THREE SIDE ARMS, SYMMETRICALLY PLACED, HAVING A TOTAL EFFECTIVE PROJECTED AREA EQUAL TO 12.0 SQUARE FEET. FOR SIDE ARM DETAILS (P/N D1130). SEE DWG. C760571 LATEST REVISION.
5. DESIGNS ASSUME TWO 7/8" DIA. LINES ON EACH TOWER FACE.
6. TOWER DESIGNS, 200 FEET AND OVER, INCLUDE 2.0 SQUARE FEET OF EFFECTIVE PROJECTED AREA FOR A BEACON (DEDUCT ONE 7/8" LINE FOR BEACON).
7. ANCHOR RADIUS IS FROM TOWER BASE TO INTERSECTION OF ROD WITH GROUND.
8. TOWER DESIGNS AND GUY CHORD LENGTHS SHOWN ARE BASED ON LEVEL GROUND. ADD 6 PERCENT TO CHORD LENGTHS (FOR SAG AND CONNECTIONS) FOR FINAL CUT LENGTHS. ( ) INDICATES INITIAL TENSION FOR GUY WIRES IN POUNDS AT 60 DEGREES FAHRENHEIT.
9. DO NOT INSTALL OR DISMANTLE TOWERS WITHIN FALLING DISTANCE OF ELECTRICAL AND/OR TELEPHONE LINES.
10. TOWER ERECTION AND DISMANTLING MUST BE BY QUALIFIED AND EXPERIENCED PERSONNEL.
11. TEMPORARY STEEL GUYS, WHEN REQUIRED DURING ERECTION OR DISMANTLING, MUST BE SUPPLIED AND INSTALLED BY THE ERECTOR.
12. INSTALL WARNING PLATE (P/N AC#5) IN A HIGHLY VISIBLE LOCATION.
13. ALL ANTENNA INSTALLATIONS MUST BE GROUNDED IN ACCORDANCE WITH LOCAL AND NATIONAL CODES.
14. EXTRA CABLE CLAMPS HAVE BEEN PROVIDED FOR TURNBUCKLE SAFETY REQUIREMENTS. FOR DETAILS SEE DWG. B880324 LATEST REVISION.
15. FOR GUY HARDWARE INSTALLATION DETAILS SEE DWG. A871382.

TOWER HT.	BASE PIER REF. DWG. C610621		INNER ANCHOR DATA REF. DWG.: BLOCK-C620643; ROD-C660415							OUTER ANCHOR DATA REF. DWG.: BLOCK-C620643; ROD-C660415						
	NO.	REAC. LBS.	BLOCK NO.	ROD NO.	ROD ANGLE	SLOPE HOR.	SLOPE VERT.	REAC. LBS. HOR.	REAC. LBS. VERT.	BLOCK NO.	ROD NO.	ROD ANGLE	SLOPE HOR.	SLOPE VERT.	REAC. LBS. HOR.	REAC. LBS. VERT.
100'	CB1	9,820	4B	GAC3455	42.5	12	11.0	4,340	3,980							
110'	CB1	10,440	4B	GAC3455	42.6	12	11.0	4,570	4,190							
120'	CB1	11,140	4C	GAC3455	42.5	12	11.0	4,890	4,480							
130'	CB1	11,770	4C	GAC3455	42.4	12	11.0	5,160	4,710							
140'	CB1	12,810	4D	GAC3455	41.3	12	10.5	5,920	5,200							
150'	CB1	13,410	4D	GAC3455	41.2	12	10.5	6,200	5,420							
160'	CB2	14,260	4D	GAC3455	41.1	12	10.5	6,630	5,780							
170'	CB2	14,900	4D	GAC3455	40.9	12	10.4	6,950	6,020							
180'	CB2	15,660	4E	GAC3455	40.7	12	10.3	7,360	6,340							
190'	CB2	16,590	4E	GAC3455	40.8	12	10.4	7,830	6,750							
200'	CB2	17,160	4E	GAC3455	40.5	12	10.3	8,170	6,980							
210'	CB2	18,590	4E	GAC3455	39.5	12	9.9	9,280	7,650							
220'	CB2	19,550	6A	GAC5655	39.2	12	10.0	9,990	8,140							
230'	CB2	20,320	6A	GAC5655	39.2	12	10.0	10,350	8,430							

No.	Revision Description	Date	Rev By	Ckd By	Appd By
R1	REV'D EIA-222-D TO EIA-222-E-1991	7-24-92	RKB	WAK	TS

ROHN

Scale: NONE	By	Date
Drawn:	GPW/WDL	9-1-87
Checked:	WAF	9-22-87
App. Eng.:	RAW	10-1-87
App. Sales:	AE	2-12-87

Title: GUYING DETAILS FOR 100'-230' 65G TOWERS 90 MPH BASIC WIND SPEED (NO ICE)

ENG. FILE:

DRAWING NO.: C870678 R1

July 1, 1995

Parts List P-604
(Replaces P-585)

PARTS LIST FOR #65G GUYED TOWERS
90 MPH Basic Wind Speed (No Ice)

Tower Height	GA65GD	G.W. 3/16″ EHS	G.W. 1/4″ EHS	G.W. 5/16″ EHS	BG2142	BG2144	BG2146	5/16″ THH	3/8″ THH	7/16″ THH	1/2TBE&J	5/8TBE&J	GAC3455	GAC565501
100′	2		300′	400′		6	6		6	6	3	3	3	
110′	2		325′	425′		6	6		6	6	3	3	3	
120′	2		375′	475′		6	6		6	6	3	3	3	
130′	2		400′	525′		6	6		6	6	3	3	3	
140′	3	400′	450′	550′	6	6	6	6	6	6	6	3	3	
150′	3	425′	500′	600′	6	6	6	6	6	6	6	3	3	
160′	3	450′	525′	650′	6	6	6	6	6	6	6	3	3	
170′	3	500′	550′	675′	6	6	6	6	6	6	6	3	3	
180′	3	500′	600′	725′	6	6	6	6	6	6	6	3	3	
190′	3	525′		1375′	6		12	6		12	3	6	3	
200′	3	550′		1425′	6		12	6		12	3	6	3	
210′	4	1200′		1550′	12		12	12		12	6	6	3	
220′	4	600′	650′	1625′	6	6	12	6	6	12		12		3
230′	4	625′	700′	1700′	6	6	12	6	6	12		12		3

Items shown above, plus one 65TG, one 15X16PP, one APL4HA, three D1130, and required number of 6520G and 65G sections, are necessary for a complete 'ground' guyed tower. (Note: Cable clamps and extra wire have been provided for turnbuckle safety requirements.)

One or two anchor grounding (AGKE) kits, along with appropriate ground clamps, and two base grounding (BGKE) kits, as recommended by EIA, are included with the tower material.

Installation information and a safety package (part number ACWS) are also included with the tower material. The safety package consists of one anti-climb warning sign and two Danger - Watch for Wires labels along with other printed safety information.

All types of antenna installations should be thoroughly inspected by qualified personnel and re-marked with hazard and warning labels at least twice a year to insure safety and proper performance.

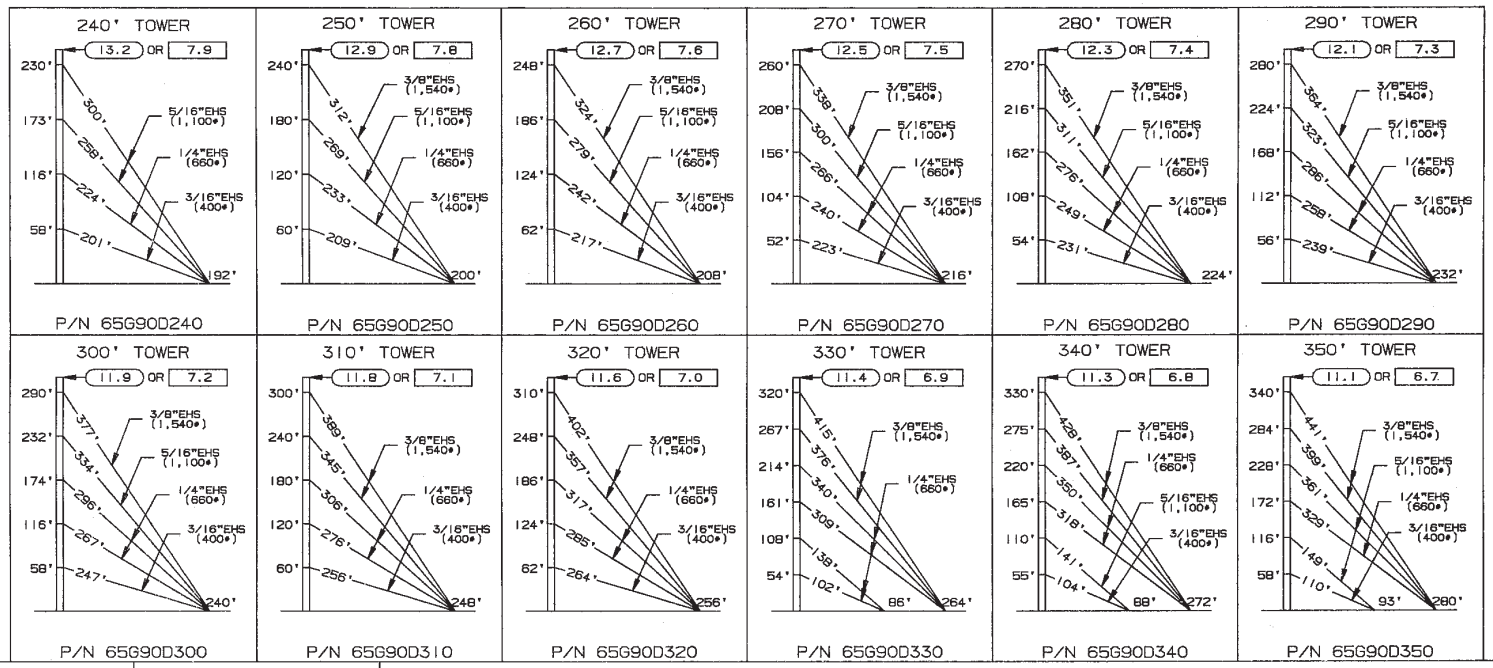

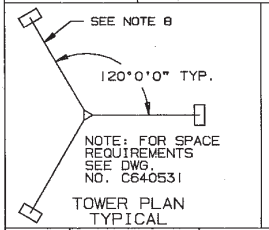

TOWER PLAN TYPICAL

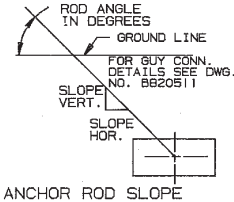

ANCHOR ROD SLOPE

GENERAL NOTES

1. TOWER DESIGNS ARE IN ACCORDANCE WITH APPROVED NATIONAL STANDARD ANSI/EIA-222-E-1991 (NO ICE).
2. ▭ ALLOWABLE PROJ. AREA (SQ. FT.) FOR ROUND MEMBER ANTENNAS. ▭ ALLOWABLE PROJ. AREA (SQ. FT.) FOR FLAT MEMBER ANTENNAS.
3. EQUIVALENT FLAT-PLATE ANTENNA AREAS, BASED ON EIA RS-222-C, MUST NOT EXCEED THE AREAS SHOWN FOR FLAT MEMBER ANTENNAS.
4. TOWER DESIGNS INCLUDE THREE SIDE ARMS, SYMMETRICALLY PLACED, HAVING A TOTAL EFFECTIVE PROJECTED AREA EQUAL TO 12.0 SQUARE FEET. FOR SIDE ARM DETAILS (P/N D1130). SEE DWG. C760571 LATEST REVISION.
5. DESIGNS ASSUME TWO 7/8" DIA. LINES ON EACH TOWER FACE.
6. TOWER DESIGNS, 200 FEET AND OVER, INCLUDE 2.0 SQUARE FEET OF EFFECTIVE PROJECTED AREA FOR A BEACON (DEDUCT ONE 7/8" LINE FOR BEACON).
7. ANCHOR RADIUS IS FROM TOWER BASE TO INTERSECTION OF ROD WITH GROUND.
8. TOWER DESIGNS AND GUY CHORD LENGTHS SHOWN ARE BASED ON LEVEL GROUND. ADD 6 PERCENT TO CHORD LENGTHS (FOR SAG AND CONNECTIONS) FOR FINAL CUT LENGTHS. ( ) INDICATES INITIAL TENSION FOR GUY WIRES IN POUNDS AT 60 DEGREES FAHRENHEIT.
9. DO NOT INSTALL OR DISMANTLE TOWERS WITHIN FALLING DISTANCE OF ELECTRICAL AND/OR TELEPHONE LINES.
10. TOWER ERECTION AND DISMANTLING MUST BE BY QUALIFIED AND EXPERIENCED PERSONNEL.
11. TEMPORARY STEEL GUYS, WHEN REQUIRED DURING ERECTION OR DISMANTLING, MUST BE SUPPLIED AND INSTALLED BY THE ERECTOR.
12. INSTALL WARNING PLATE (P/N ACWS) IN A HIGHLY VISIBLE LOCATION.
13. ALL ANTENNA INSTALLATIONS MUST BE GROUNDED IN ACCORDANCE WITH LOCAL AND NATIONAL CODES.
14. EXTRA CABLE CLAMPS HAVE BEEN PROVIDED FOR TURNBUCKLE SAFETY REQUIREMENTS. FOR DETAILS SEE DWG. B680324 LATEST REVISION.
15. FOR GUY HARDWARE INSTALLATION DETAILS SEE DWG. A871382.

TOWER HT.	BASE PIER REF. DWG. C610621		INNER ANCHOR DATA REF. DWG.: BLOCK-C620643; ROD-C660415							OUTER ANCHOR DATA REF. DWG.: BLOCK-C620643; ROD-C660415						
	NO.	REAC. LBS.	BLOCK NO.	ROD NO.	ROD ANGLE	SLOPE HOR.	SLOPE VERT.	REAC. LBS. HOR.	REAC. LBS. VERT.	BLOCK NO.	ROD NO.	ROD ANGLE	SLOPE HOR.	SLOPE VERT.	REAC. LBS. HOR.	REAC. LBS. VERT.
240'	CB2	21,070	6A	GAC5655	39.8	12	10.0	10,730	8,720							
250'	CB3	22,610	6A	GAC5655	39.8	12	10.0	11,610	9,490							
260'	CB3	23,340	6A	GAC5655	39.8	12	10.0	12,060	9,770							
270'	CB3	25,040	6B	GAC5655	39.8	12	10.0	13,490	10,740							
280'	CB3	25,810	6B	GAC5655	39.8	12	10.0	13,900	11,040							
290'	CB3	26,790	6B	GAC5655	39.8	12	10.0	14,480	11,430							
300'	CB3	27,600	6C	GAC5655	39.8	12	10.0	14,920	11,760							
310'	CB3	29,030	6C	GAC5655	39.8	12	10.0	15,840	12,490							
320'	CB3	29,830	6C	GAC5655	39.8	12	10.0	16,290	12,820							
330'	CB4	35,880	4B	GAC3455	43.0	12	11.2	3,770	3,510	6C	GAC5655	42.4	12	11.0	13,800	12,610
340'	CB4	37,490	4B	GAC3455	45.6	11.8	12	3,880	3,960	6C	GAC5655	42.5	12	11.0	14,120	12,930
350'	CB4	39,540	4C	GAC3455	45.4	11.8	12	4,340	4,410	6D	GAC5655	42.4	12	11.0	14,860	13,590

No.	Revision Description	Date	Rev By	Ckd By	Appd By
R1	REV'D EIA-222-D TO EIA-222-E-1991	7-24-92	RKB	WMN	75

ROHN

Scale: NONE	By	Date
Drawn:	GPW/MDL	9-1-87
Checked:	WRF	9-22-87
App. Eng.:	RAW	10-1-87
App. Sales:	AE	2-12-88

Title: GUYING DETAILS FOR 240'-350' 65G TOWERS 90 MPH BASIC WIND SPEED (NO ICE)

ENG. FILE:

DRAWING NO.: C870679 R1

July 1, 1995

Parts List P-605
(Replaces P-570)

PARTS LIST FOR #65G GUYED TOWERS
90 MPH Basic Wind Speed (No Ice)

Tower Height	GA65GD	G.W. 3/16″ EHS	G.W. 1/4″ EHS	G.W. 5/16″ EHS	G.W. 3/8″ EHS	BG2142	BG2144	BG2146	BG2147	5/16″ THH	3/8″ THH	7/16″ THH	1/2″ THH	1/2TBE&J	5/8TBE&J	GAC3455	GAC565501
240′	4	650′	725′	1775′		6	6	12		6	6	12			12		3
250′	4	675′	750′	875′	1000′	6	6	6	6	6	6	6	6		12		3
260′	4	700′	775′	900′	1050′	6	6	6	6	6	6	6	6		12		3
270′	5	725′	1625′	975′	1075′	6	12	6	6	6	12	6	6		15		3
280′	5	750′	1675′	1000′	1125′	6	12	6	6	6	12	6	6		15		3
290′	5	775′	1750′	1050′	1175′	6	12	6	6	6	12	6	6		15		3
300′	5	800′	1800′	1075′	1200′	6	12	6	6	6	12	6	6		15		3
310′	5	825′	1875′		2350′	6	12		12	6	12		12		15		3
320′	5	850′	1925′		2425′	6	12		12	6	12		12		15		3
330′	6		2875′		2525′		24		12		24		12	6	12	3	3
340′	6	350′	2350′	450′	2600′	6	12	6	12	6	12	6	12	3	15	3	3
350′	6	350′	1050′	1625′	2675′	6	6	12	12	6	6	12	12	3	15	3	3

Items shown above, plus one 65TG, one 15X16PP, one APL4HA, three D1130, and required number of 6520G and 65G sections, are necessary for a complete ‘ground’ guyed tower. (Note: Cable clamps and extra wire have been provided for turnbuckle safety requirements.)

One or two anchor grounding (AGKE) kits, along with appropriate ground clamps, and two base grounding (BGKE) kits, as recommended by EIA, are included with the tower material.

Installation information and a safety package (part number ACWS) are also included with the tower material. The safety package consists of one anti-climb warning sign and two Danger - Watch for Wires labels along with other printed safety information.

All types of antenna installations should be thoroughly inspected by qualified personnel and re-marked with hazard and warning labels at least twice a year to insure safety and proper performance.

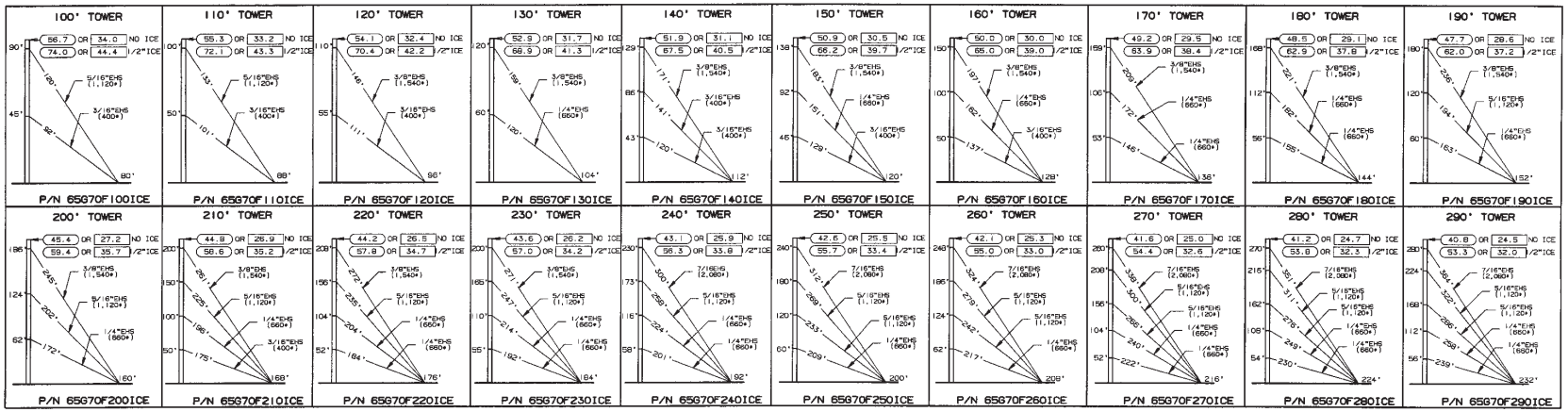

GENERAL NOTES

1. TOWER DESIGNS ARE IN ACCORDANCE WITH APPROVED NATIONAL STANDARD ANSI/TIA/EIA-222-F-1996 (1/2" RADIAL ICE LOAD).
2. ⊂⊃ ALLOWABLE PROJ. AREA (SQ. FT.) FOR ROUND MEMBER ANTENNAS.
   ▭ ALLOWABLE PROJ. AREA (SQ. FT.) FOR FLAT MEMBER ANTENNAS.
3. EQUIVALENT FLAT-PLATE ANTENNA AREAS, BASED ON EIA RS-222-C, MUST NOT EXCEED THE AREAS SHOWN FOR FLAT MEMBER ANTENNAS.
4. TOWER DESIGNS INCLUDE THREE SIDE ARMS, SYMMETRICALLY PLACED, HAVING A TOTAL EFFECTIVE PROJECTED AREA EQUAL TO 12.0 SQUARE FEET. FOR SIDE ARM DETAILS (P/N D1130), SEE DWG. C760571 LATEST REVISION.
5. DESIGNS ASSUME TWO 7/8" DIA. LINES ON EACH TOWER FACE.
6. TOWER DESIGNS, 200 FEET AND OVER, INCLUDE 2.0 SQUARE FEET OF EFFECTIVE PROJECTED AREA FOR A BEACON (DEDUCT ONE 7/8" LINE FOR BEACON).
7. ANCHOR RADIUS IS FROM TOWER BASE TO INTERSECTION OF ROD WITH GROUND.
8. TOWER DESIGNS AND GUY CHORD LENGTHS SHOWN ARE BASED ON LEVEL GROUND. ADD 6 PERCENT TO CHORD LENGTHS (FOR SAG AND CONNECTIONS) FOR FINAL CUT LENGTHS. ( ) INDICATES INITIAL TENSION FOR GUY WIRES IN POUNDS AT 50 DEGREES FAHRENHEIT.
9. DO NOT INSTALL OR DISMANTLE TOWERS WITHIN FALLING DISTANCE OF ELECTRICAL AND/OR TELEPHONE LINES.
10. TOWER ERECTION AND DISMANTLING MUST BE BY QUALIFIED AND EXPERIENCED PERSONNEL.
11. TEMPORARY STEEL GUYS, WHEN REQUIRED DURING ERECTION OR DISMANTLING, MUST BE SUPPLIED AND INSTALLED BY THE ERECTOR.
12. INSTALL WARNING PLATE (P/N ACWS) IN A HIGHLY VISIBLE LOCATION.
13. ALL ANTENNA INSTALLATIONS MUST BE GROUNDED IN ACCORDANCE WITH LOCAL AND NATIONAL CODES.
14. EXTRA CABLE CLAMPS HAVE BEEN PROVIDED FOR TURNBUCKLE SAFETY REQUIREMENTS. FOR DETAILS SEE DWG. B680324 LATEST REVISION.
15. FOR GUY HARDWARE INSTALLATION DETAILS SEE DWG. AB71382.

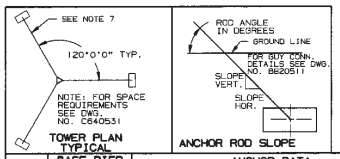

TOWER PLAN TYPICAL

ANCHOR ROD SLOPE

TOWER HT.	BASE PIER REF. DWG. C610621		ANCHOR DATA REF. DWG.: BLOCK-C620543; ROD-C680415						
	NO.	REAC. LBS.	BLOCK NO.	ROD NO.	ROD ANGLE	SLOPE HOR.	SLOPE VERT.	REAC. LBS. HOR.	REAC. LBS. VERT.
100'	CB1	13,430	4C	BAC3455TOP	43.4	12	11.3	4,860	4,600
110'	CB2	14,260	4C	BAC3455TOP	43.3	12	11.3	5,100	4,810
120'	CB2	15,330	4D	BAC3455TOP	43.5	12	11.4	5,500	5,220
130'	CB2	16,320	4D	BAC3455TOP	42.6	12	11.0	6,050	5,560
140'	CB2	17,840	4E	BAC3455TOP	40.8	12	10.4	7,140	5,170
150'	CB2	18,940	4E	BAC3455TOP	40.6	12	10.3	7,670	5,590
160'	CB2	19,900	4E	BAC3455TOP	40.7	12	10.3	8,040	5,920
170'	CB2	21,110	4E	BAC3455TOP	39.8	12	10.0	8,760	7,300
180'	CB2	21,990	4E	BAC3455TOP	39.6	12	10.0	9,170	7,590
190'	CB3	23,690	5A	BAC5955TOP	39.8	12	10.0	9,890	8,240
200'	CB3	24,480	5A	BAC5955TOP	39.4	12	10.0	10,250	8,430
210'	CB3	27,540	6B	BAC5755TOP	38.8	12	9.6	11,910	9,570
220'	CB3	28,670	6B	BAC5755TOP	38.0	12	9.4	12,710	9,930
230'	CB3	29,610	6B	BAC5755TOP	38.0	12	9.4	13,200	10,330
240'	CB4	32,310	6C	BAC5755TOP	38.2	12	9.5	14,090	11,110
250'	CB4	34,120	6C	BAC5755TOP	38.1	12	9.4	14,990	11,750
260'	CB4	34,990	6C	BAC5755TOP	37.9	12	9.3	15,450	12,030
270'	CB4	39,180	6D	BAC5755TOP	37.0	12	9.0	17,800	13,420
280'	CB4	40,330	6D	BAC5755TOP	37.0	12	9.0	18,420	13,880
290'	CB4	41,430	6A	BAC5755TOP	36.9	12	9.0	18,950	14,250

No.	Revision Description	Date	Rev By	Chk By	Appd By
R1	UPDATED PART NUMBERS	1-17-00	ACS		

ROHN

Scale: NONE	By	Date
Drawn:	JHN	01-06-99
Checked:	SRH	4-9-99
App. Eng.:	TS	4-9-99
Parent File:		

GUYING DETAILS FOR 100'-290' 65G TOWERS 70 MPH BASIC WIND SPEED (1/2" RADIAL ICE LOAD)

ENG. FILE:

DWG. NO.: D980892 SHEET 1 OF 1 REV. 1

COMPLETE ROHN 65G GUYED TOWERS

Tower Height	70 MPH Basic Wind Speed — 1/2′ Ice		90 MPH Basic Wind Speed — 1/2′ Ice	
	Part Number	Weight	Part Number	Weight
100′	np 65G70F100ICE	2230	np 65G90F100ICE	2273
110′	np 65G70F110ICE	2413	np 65G90F110ICE	2461
120′	np 65G70F120ICE	2661	np 65G90F120ICE	2713
130′	np 65G70F130ICE	2859	np 65G90F130ICE	2900
140′	np 65G70F140ICE	3145	np 65G90F140ICE	3533
150′	np 65G70F150ICE	3349	np 65G90F150ICE	3726
160′	np 65G70F160ICE	3567	np 65G90F160ICE	3949
170′	np 65G70F170ICE	3759	np 65G90F170ICE	4227
180′	np 65G70F180ICE	3973	np 65G90F180ICE	4493
190′	np 65G70F190ICE	4354	np 65G90F190ICE	4746
200′	np 65G70F200ICE	4577		
210′	np 65G70F210ICE	5076		
220′	np 65G70F220ICE	5300		
230′	np 65G70F230ICE	5490		
240′	np 65G70F240ICE	5866		
250′	np 65G70F250ICE	6132		
260′	np 65G70F260ICE	6362		
270′	np 65G70F270ICE	6732		
280′	np 65G70F280ICE	6962		
290′	np 65G70F290ICE	7182		

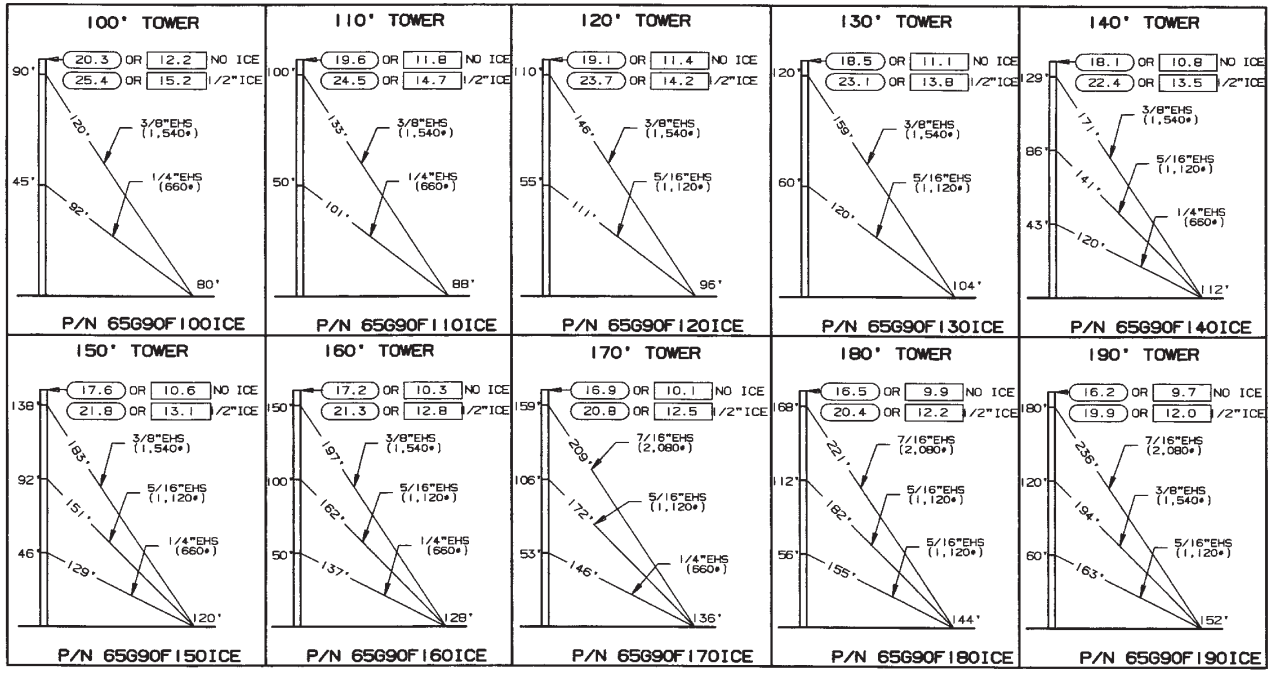

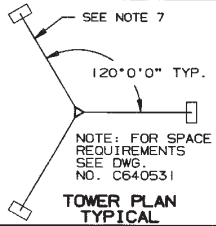

TOWER PLAN TYPICAL

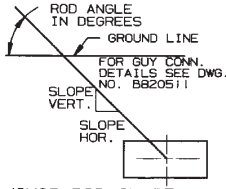

ANCHOR ROD SLOPE

GENERAL NOTES

1. TOWER DESIGNS ARE IN ACCORDANCE WITH APPROVED NATIONAL STANDARD ANSI/TIA/EIA-222-F-1996 (1/2" RADIAL ICE LOAD).
2. ▭ ALLOWABLE PROJ. AREA (SQ. FT.) FOR ROUND MEMBER ANTENNAS.
   ▭ ALLOWABLE PROJ. AREA (SQ. FT.) FOR FLAT MEMBER ANTENNAS.
3. EQUIVALENT FLAT-PLATE ANTENNA AREAS, BASED ON EIA RS-222-C, MUST NOT EXCEED THE AREAS SHOWN FOR FLAT MEMBER ANTENNAS.
4. TOWER DESIGNS INCLUDE THREE SIDE ARMS, SYMMETRICALLY PLACED, HAVING A TOTAL EFFECTIVE PROJECTED AREA EQUAL TO 12.0 SQUARE FEET. FOR SIDE ARM DETAILS (P/N D1130), SEE DWG. C760571 LATEST REVISION.
5. DESIGNS ASSUME TWO 7/8" DIA. LINES ON EACH TOWER FACE.
6. TOWER DESIGNS, 200 FEET AND OVER, INCLUDE 2.0 SQUARE FEET OF EFFECTIVE PROJECTED AREA FOR A BEACON (DEDUCT ONE 7/8" LINE FOR BEACON).
7. ANCHOR RADIUS IS FROM TOWER BASE TO INTERSECTION OF ROD WITH GROUND.
8. TOWER DESIGNS AND GUY CHORD LENGTHS SHOWN ARE BASED ON LEVEL GROUND. ADD 6 PERCENT TO CHORD LENGTHS (FOR SAG AND CONNECTIONS) FOR FINAL CUT LENGTHS. ( ) INDICATES INITIAL TENSION FOR GUY WIRES IN POUNDS AT 60 DEGREES FAHRENHEIT.
9. DO NOT INSTALL OR DISMANTLE TOWERS WITHIN FALLING DISTANCE OF ELECTRICAL AND/OR TELEPHONE LINES.
10. TOWER ERECTION AND DISMANTLING MUST BE BY QUALIFIED AND EXPERIENCED PERSONNEL.
11. TEMPORARY STEEL GUYS, WHEN REQUIRED DURING ERECTION OR DISMANTLING, MUST BE SUPPLIED AND INSTALLED BY THE ERECTOR.
12. INSTALL WARNING PLATE (P/N ACWS) IN A HIGHLY VISIBLE LOCATION.
13. ALL ANTENNA INSTALLATIONS MUST BE GROUNDED IN ACCORDANCE WITH LOCAL AND NATIONAL CODES.
14. EXTRA CABLE CLAMPS HAVE BEEN PROVIDED FOR TURNBUCKLE SAFETY REQUIREMENTS. FOR DETAILS SEE DWG. B680324 LATEST REVISION.
15. FOR GUY HARDWARE INSTALLATION DETAILS SEE DWG. A871382.

TOWER HT.	BASE PIER REF. DWG. C610621		ANCHOR DATA REF. DWG.: BLOCK-C620643; ROD-C660415						
	NO.	REAC. LBS.	BLOCK NO.	ROD NO.	ROD ANGLE	SLOPE HOR.	SLOPE VERT.	REAC. LBS. HOR.	REAC. LBS. VERT.
100'	CB2	14,920	4D	GAC3455TOP	41.5	12	10.6	6,400	5,670
110'	CB2	16,100	4D	GAC3455TOP	41.5	12	10.6	6,880	6,090
120'	CB2	17,380	4E	GAC3455TOP	40.6	12	10.3	7,820	6,700
130'	CB2	18,630	4E	GAC3455TOP	40.6	12	10.3	8,340	7,150
140'	CB2	21,510	6A	GAC5755TOP	38.9	12	9.7	10,410	8,400
150'	CB3	22,630	6A	GAC5755TOP	38.7	12	9.6	11,000	8,820
160'	CB3	24,010	6B	GAC5755TOP	38.8	12	9.7	11,660	9,390
170'	CB3	26,520	6B	GAC5755TOP	39.0	12	9.7	12,790	10,360
180'	CB3	28,170	6B	GAC5755TOP	38.2	12	9.5	13,890	10,940
190'	CB3	30,430	6C	GAC5755TOP	38.4	12	9.5	14,900	11,830

No.	Revision Description	Date	Rev By	Ckd By	Appd By
R1	UPDATED PART NUMBERS	1-17-00	ACS	SRH	

ROHN

Scale: NONE	By	Date
Drawn:	JHN	01-06-99
Checked:	SRH	4-9-99
App. Eng.:	TS	4-9-99
Parent File:		

GUYING DETAILS FOR 100'-190' 65G TOWERS 90 MPH BASIC WIND SPEED (1/2" RADIAL ICE LOAD)

ENG. FILE:

DWG. NO.: C981852 REV. 1

SHEET 1 OF 1

Parts List P-634
(New Sheet)

PARTS LIST FOR #65G GUYED TOWERS
90 MPH Basic Wind Speed (1/2" Ice)

TOWER HEIGHT	GA65GD	G.W. 1/4" EHS	G.W. 5/16" EHS	G.W. 3/8" EHS	G.W. 7/16" EHS	BG2144	BG2146	BG2147	BG2148	3/8" THH	7/16" THH	1/2" THH	9/16" THH	1/2TB E&J	5/8TB E&J	GAC 3/4TB E&J	GAC 3455 TOP	5755 TOP
100'	2	350'		400'		6		6		6		6		3	3		3	
110'	2	350'		450'		6		6		6		6		3	3		3	
120'	2		400'	500'			6	6			6	6			6		3	
130'	2		400'	550'			6	6			6	6			6		3	
140'	3	400'	500'	600'		6	6	6		6	6	6				9		3
150'	3	450'	500'	650'		6	6	6		6	6	6				9		3
160'	3	500'	550'	700'		6	6	6		6	6	6				9		3
170'	3	500'	600'		700'	6	6		6	6	6		6			9		3
180'	3		1150'		750'		12		6		12		6			9		3
190'	3		550'	650'	800'		6	6	6		6	6	6			9		3

Items shown above, plus one 65TG, one 15X16PP, one APL4HA, and required number of 6520G and 65G sections, are necessary for a complete 'ground' guyed tower. (Note: Cable clamps and extra wire have been provided for turnbuckle safety requirements.)

One or two anchor grounding (AGKE) kits, along with appropriate ground clamps, and two base grounding (BGKE) kits, as recommended by EIA, are included with the tower material.

Installation information and a safety package (part number ACWS) are also included with the tower material. The safety package consists of one anti-climb warning sign and two Danger - Watch for Wires labels along with other printed safety information.

All types of antenna installations should be thoroughly inspected by qualified personnel and re-marked with hazard and warning labels at least twice a year to insure safety and proper performance.

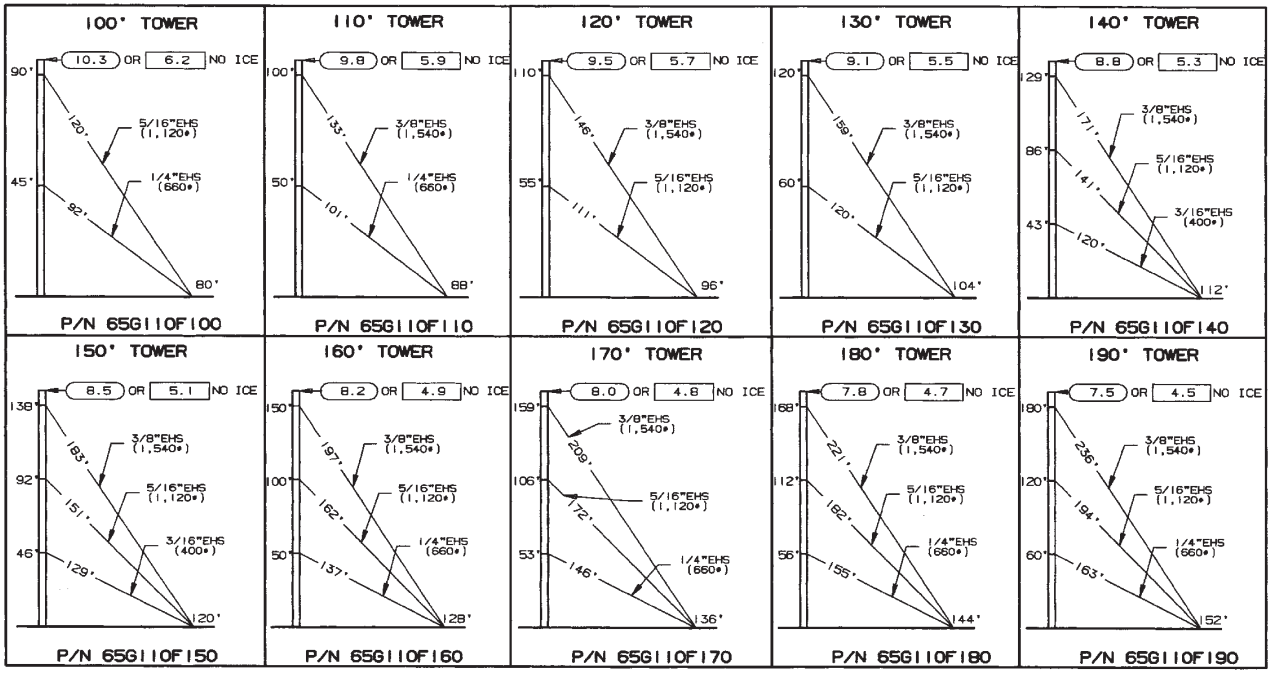

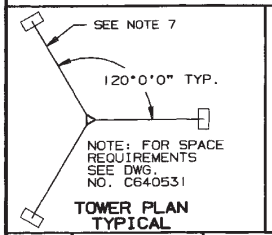

TOWER PLAN TYPICAL

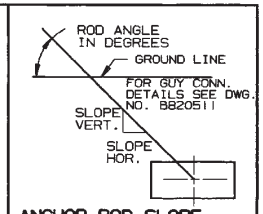

ANCHOR ROD SLOPE

GENERAL NOTES

1. TOWER DESIGNS ARE IN ACCORDANCE WITH APPROVED NATIONAL STANDARD ANSI/TIA/EIA-222-F-1996 (NO ICE).
2. ▭ ALLOWABLE PROJ. AREA (SQ. FT.) FOR ROUND MEMBER ANTENNAS. [ ] ALLOWABLE PROJ. AREA (SQ. FT.) FOR FLAT MEMBER ANTENNAS.
3. EQUIVALENT FLAT-PLATE ANTENNA AREAS, BASED ON EIA RS-222-C, MUST NOT EXCEED THE AREAS SHOWN FOR FLAT MEMBER ANTENNAS.
4. TOWER DESIGNS INCLUDE THREE SIDE ARMS, SYMMETRICALLY PLACED, HAVING A TOTAL EFFECTIVE PROJECTED AREA EQUAL TO 12.0 SQUARE FEET. FOR SIDE ARM DETAILS (P/N D1130), SEE DWG. C760571 LATEST REVISION.
5. DESIGNS ASSUME TWO 7/8" DIA. LINES ON EACH TOWER FACE.
6. TOWER DESIGNS, 200 FEET AND OVER, INCLUDE 2.0 SQUARE FEET OF EFFECTIVE PROJECTED AREA FOR A BEACON (DEDUCT ONE 7/8" LINE FOR BEACON).
7. ANCHOR RADIUS IS FROM TOWER BASE TO INTERSECTION OF ROD WITH GROUND.
8. TOWER DESIGNS AND GUY CHORD LENGTHS SHOWN ARE BASED ON LEVEL GROUND. ADD 6 PERCENT TO CHORD LENGTHS (FOR SAG AND CONNECTIONS) FOR FINAL CUT LENGTHS. ( ) INDICATES INITIAL TENSION FOR GUY WIRES IN POUNDS AT 60 DEGREES FAHRENHEIT.
9. DO NOT INSTALL OR DISMANTLE TOWERS WITHIN FALLING DISTANCE OF ELECTRICAL AND/OR TELEPHONE LINES.
10. TOWER ERECTION AND DISMANTLING MUST BE BY QUALIFIED AND EXPERIENCED PERSONNEL.
11. TEMPORARY STEEL GUYS, WHEN REQUIRED DURING ERECTION OR DISMANTLING, MUST BE SUPPLIED AND INSTALLED BY THE ERECTOR.
12. INSTALL WARNING PLATE (P/N ACWS) IN A HIGHLY VISIBLE LOCATION.
13. ALL ANTENNA INSTALLATIONS MUST BE GROUNDED IN ACCORDANCE WITH LOCAL AND NATIONAL CODES.
14. EXTRA CABLE CLAMPS HAVE BEEN PROVIDED FOR TURNBUCKLE SAFETY REQUIREMENTS. FOR DETAILS SEE DWG. B680324 LATEST REVISION.
15. FOR GUY HARDWARE INSTALLATION DETAILS SEE DWG. A871382.

TOWER HT.	BASE PIER REF. DWG. C610621		ANCHOR DATA REF. DWG.: BLOCK-C620643; ROD-C660415						
	NO.	REAC. LBS.	BLOCK NO.	ROD NO.	ROD ANGLE	SLOPE HOR.	SLOPE VERT.	REAC. LBS. HOR.	REAC. LBS. VERT.
100'	CB1	12,290	4D	GAC3455TOP	41.8	12	10.7	5,820	5,200
110'	CB1	13,540	4D	GAC3455TOP	42.2	12	10.9	6,310	5,720
120'	CB2	14,610	4E	GAC3455TOP	41.2	12	10.5	7,060	6,200
130'	CB2	15,590	4E	GAC3455TOP	41.2	12	10.5	7,520	6,590
140'	CB2	17,180	4E	GAC3455TOP	40.6	12	10.3	8,520	7,310
150'	CB2	18,220	6A	GAC5655TOP	40.4	12	10.2	9,090	7,750
160'	CB2	19,420	6A	GAC5655TOP	39.7	12	10.0	9,960	8,280
170'	CB2	20,430	6A	GAC5655TOP	39.5	12	10.0	10,530	8,700
180'	CB2	21,570	6A	GAC5655TOP	39.5	12	10.0	11,140	9,190
190'	CB3	22,740	6A	GAC5655TOP	39.5	12	10.0	11,770	9,690

No. ▲ Revision Description	▲ Date	▲ Rev. By	▲ Ckd By	▲ Appd By

ROHN

Scale: NONE	By	Date
Drawn:	JHN	01-06-99
Checked:	SOH	3/9/99
App. Eng.:	TB	4/9/99
Parent File:		

GUYING DETAILS FOR 100'-190'
65G TOWERS
110MPH BASIC WIND SPEED (NO ICE)

ENG. FILE:

DWG. NO.: C981893

SHEET 1 OF 1

REV.

Parts List P-632
(New Sheet)

PARTS LIST FOR #65G GUYED TOWERS
110 MPH Basic Wind Speed (No Ice)

TOWER HEIGHT	GA65GD	G.W. 3/16" EHS	G.W. 1/4" EHS	G.W. 5/16" EHS	G.W. 3/8" EHS	BG2142	370023 GC65136 (KITS) BG2144	370025 GC65128 (KITS) BG2146	370027 GC65264 (KITS) BG2147	5/16" THH	3/8" THH	7/16" THH	1/2" THH	1/2TB E&J	5/8TB E&J	GAC 3455 TOP	GAC 5655 TOP
100'	2		350'	400'			6	6			6	6		3	3	3	
110'	2		350'		450'		6		6		6		6	3	3	3	
120'	2			400'	500'			6	6			6	6		6	3	
130'	2			400'	550'			6	6			6	6		6	3	
140'	3	400'		500'	600'	6		6	6	6		6	6	3	6	3	
150'	3	450'		500'	650'	6		6	6	6		6	6		9		3
160'	3		500'	550'	700'		6	6	6		6	6	6		9		3
170'	3		500'	600'	700'		6	6	6		6	6	6		9		3
180'	3		550'	650'	750'		6	6	6		6	6	6		9		3
190'	3		550'	650'	800'		6	6	6		6	6	6		9		3

Items shown above, plus one 65TG, one 15/16X16PP, one APL4HA, and required number of 6520G and 65G sections, are necessary for a complete 'ground' guyed tower. (Note: Cable clamps and extra wire have been provided for turnbuckle safety requirements.)

One or two anchor grounding (AGK1G) kits, along with appropriate ground clamps, and two base grounding (BGKE1G) kits, as recommended by EIA, are included with the tower material.

Installation information and a safety package (part number ACWS) are also included with the tower material. The safety package consists of one anti-climb warning sign and two Danger - Watch for Wires labels along with other printed safety information.

All types of antenna installations should be thoroughly inspected by qualified personnel and re-marked with hazard and warning labels at least twice a year to insure safety and proper performance.

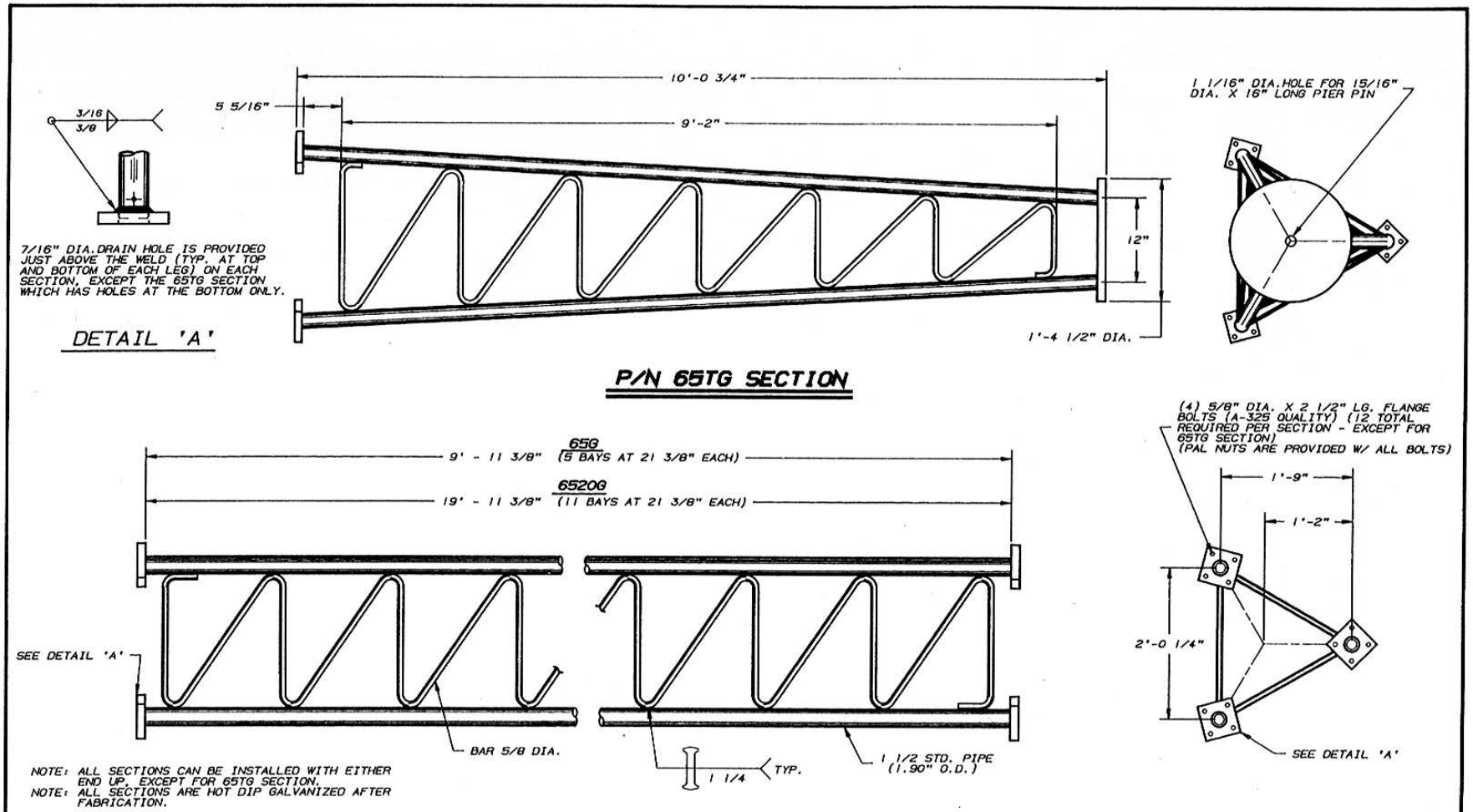

SEC. >>	65G TOWER SECTION PROPERTIES		
ITEM	LEGS	BRACES	SECTION
SIZE	PIPE 1.50 STD.	BAR 5/8 DIA.	N/A
Fy	50.0	36.0	N/A
A	0.799	0.3068	2.40
S	0.326	0.0240	15.71
I	0.310	0.0075	234.9
r	0.623	0.1563	9.90
L	21.4	30.9	VARIES
K	1.0	0.70	1.0
KL/r	34.3	138.4	VARIES
C	28.3	3.20	N/A
T	28.3	N/A	N/A
M	N/A	N/A	49.5
W	2.72	1.044	14.50
Ws	164.0	126.0	290.0

NOMENCLATURE

A = CROSS SECTIONAL AREA (SQUARE INCHES)
C = COMPRESSION CAPACITY WITH 1/3 INCREASE IN ALLOWABLE STRESS (KIPS)
I = MOMENT OF INERTIA ABOUT CENTROIDAL AXIS (INCHES**4)
Fy = MINIMUM YIELD STRENGTH (KSI)
K = EFFECTIVE LENGTH FACTOR (DIMENSIONLESS)
L = UNBRACED LENGTH (INCHES)
M = MOMENT CAPACITY WITH 1/3 INCREASE IN ALLOWABLE STRESS (FT.-KIPS)
N/A = NOT APPLICABLE
S = ELASTIC SECTION MODULUS (INCHES**3)
T = TENSION CAPACITY WITH 1/3 INCREASE IN ALLOWABLE STRESS (KIPS)
r = RADIUS OF GYRATION (INCHES)
W = WEIGHT PER FOOT (POUNDS)
Ws = WEIGHT PER SECTION (POUNDS)

NOTE: CAPACITIES SHOWN ARE BASED ON ANSI/EIA-222-E-1991

No.	Revision Description	Date	By
R14	REV'D EIA-222-D-1986 TO EIA-222-E-1991	9/10/91	RKB
R13	REDRAWN AND REVISED SPEC.	02/18/88	GPW

UNR-Rohn

Title: 65G SECTION ASSEMBLY

Scale: NONE
Drawn by: GPW 02/18/88
Checked by: WDW 2-24-88
Approved by Engineering: RAM 2-25-88
Approved by Production: Date
Approved by Sales: 2-25-88

Unless otherwise specified, dimensions are given in inches. Tolerances: Decimals ±, Fractions ±, Angles ±
Material: Finish: Weight:

File Number:
Drawing Number: C630665 R14

BRUNING 41503

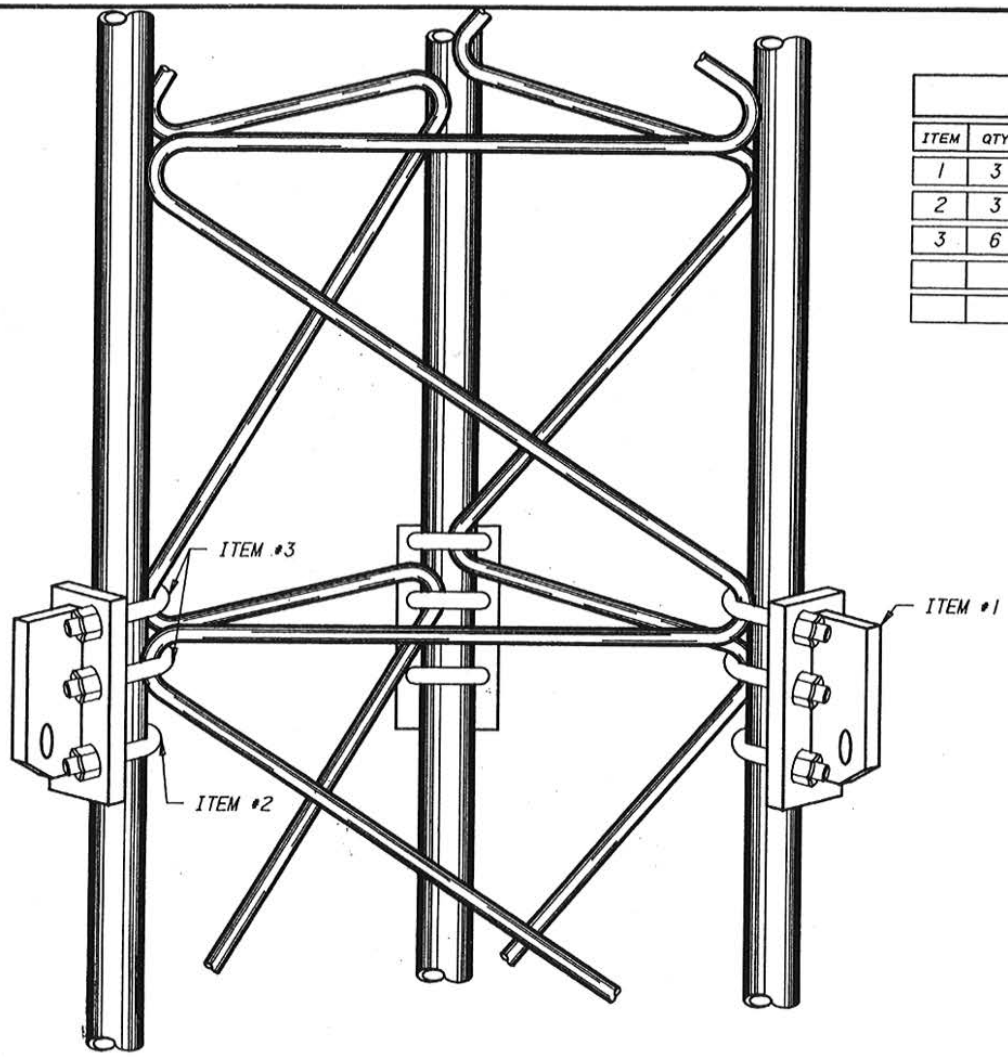

ASSEMBLY P/N GA65GD BILL OF MATERIAL

ITEM	QTY	PART NO.	DESCRIPTION	DWG NO.
1	3	B65GD	GUY BRACKET	C870709
2	3	JR810A	1/2" U-BOLT ASSY	B651028
3	6	JR65SA	1/2" U-BOLT ASSY	B710909

GENERAL NOTES

1. 2 UPPERMOST U-BOLTS MUST INTERCONNECT WITH ZIG-ZAG BRACES AS SHOWN.
2. BRACKET DESIGNED FOR A MAXIMUM 7.5 * KIPS VERTICAL DOWNPULL.
3. MAXIMUM THIMBLE SIZE = 9/16" HVY

* MAXIMUM DOWNPULL CAPACITY BASED ON ANSI/EIA-222-E-1991.

No.	Revision Description	Date	By
R2	REV. E WAS REV. D	8-27-92	JDM
R1	ADDED CAPACITY NOTE	3-27-91	CSR

UNR-Rohn

Title: GUY BRACKET ASSEMBLY FOR 65G TOWERS

Scale: NONE

Drawn by: WRF/WDU Date: 9/22/87

Checked by: GPW Date: 02-26-88

Approved by Engineering: RAM Date: 2-26-88

Approved by Production: Date

Approved by Sales: Date: 2-26-88

Unless otherwise specified, dimensions are given in inches.
Tolerances: Decimals ± Fractions ± Angles ±
Material Finish Weight

File Number

Drawing Number: B870900R 2

BRUNING 41503

Blank

ROHN™ Products

G Series Accessories

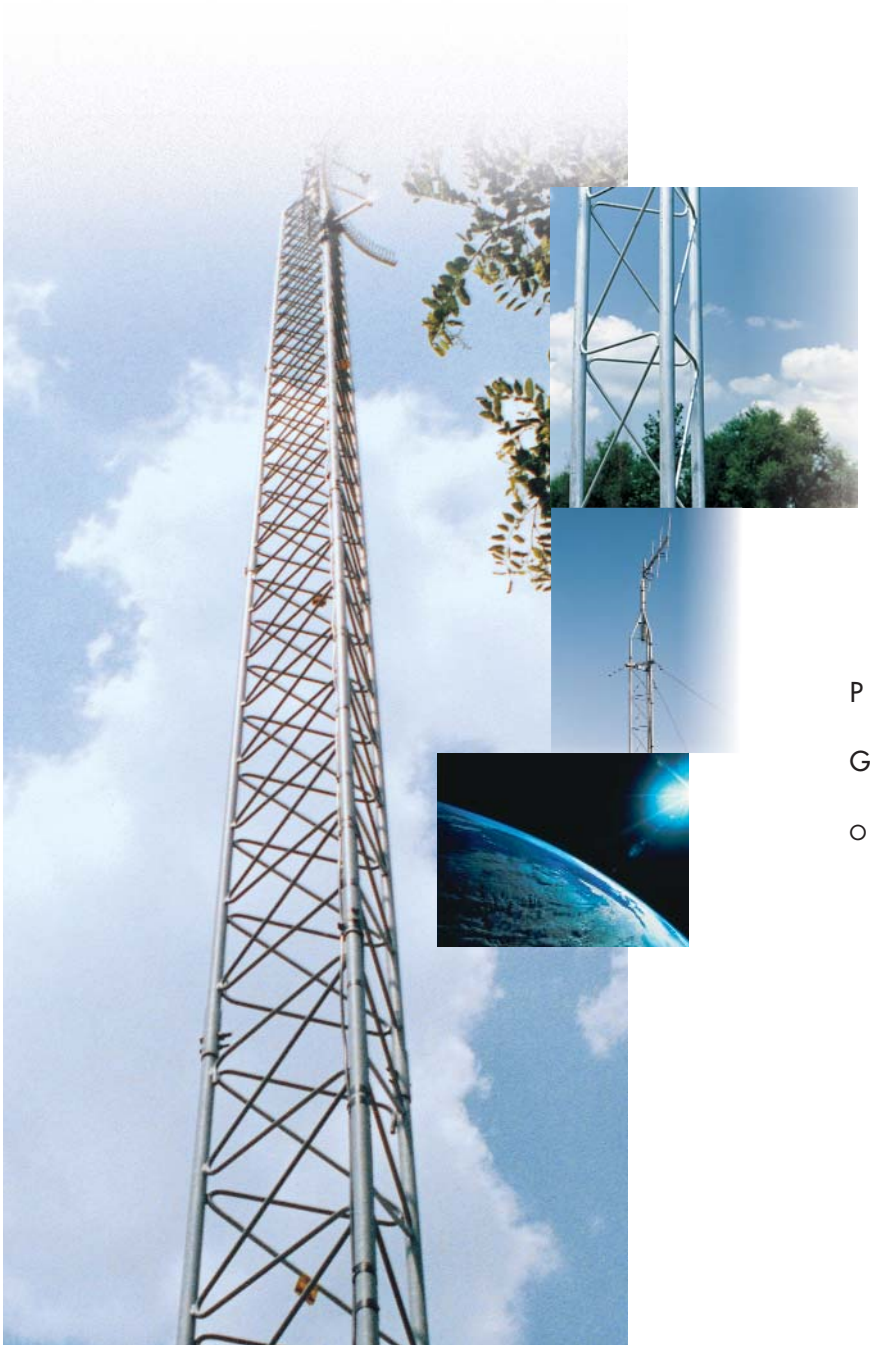

Products for a Growing World of Technology

Blank

DBS TOWER MOUNT
For Today's New Generation of Reception Dishes

Supports most all major DBS antenna brands.

Specifications

Model	Mast Specifications
KY2068A15	1.5" O.D. Mast
KY206816	1.66" O.D. Mast
KY2068A2	2" STD I.D. Mast 2 3/8" O.D. Mast
DDM150	1.5" O.D. Mast
DDM166	1.66" O.D. Mast
DDM238	2" STD. I.D. Mast 2 3/8" O.D. Mast

The DBS Tower Mount for 25G towers is one of the latest additions to the complete line of ROHN antenna support products. Other receive antenna mounts include gable end mounts, tripod mounts, telescoping masts, towers wall brackets, and non-penetrating roof mounts.

The mont goes together quickly, with a minimum of bolted connections. The angle steel cross members connect directly to the tower legs with easy-to-use u-bolts.

This mount is either available in a hot dip galvanized or pre-galvanized finish.

Disassembled, the lightweight ***UPS Shippable*** mount stores in very small spaces with the angle members nested.

Varied mast diameters are available to provide for mounting most current DBS dishes.

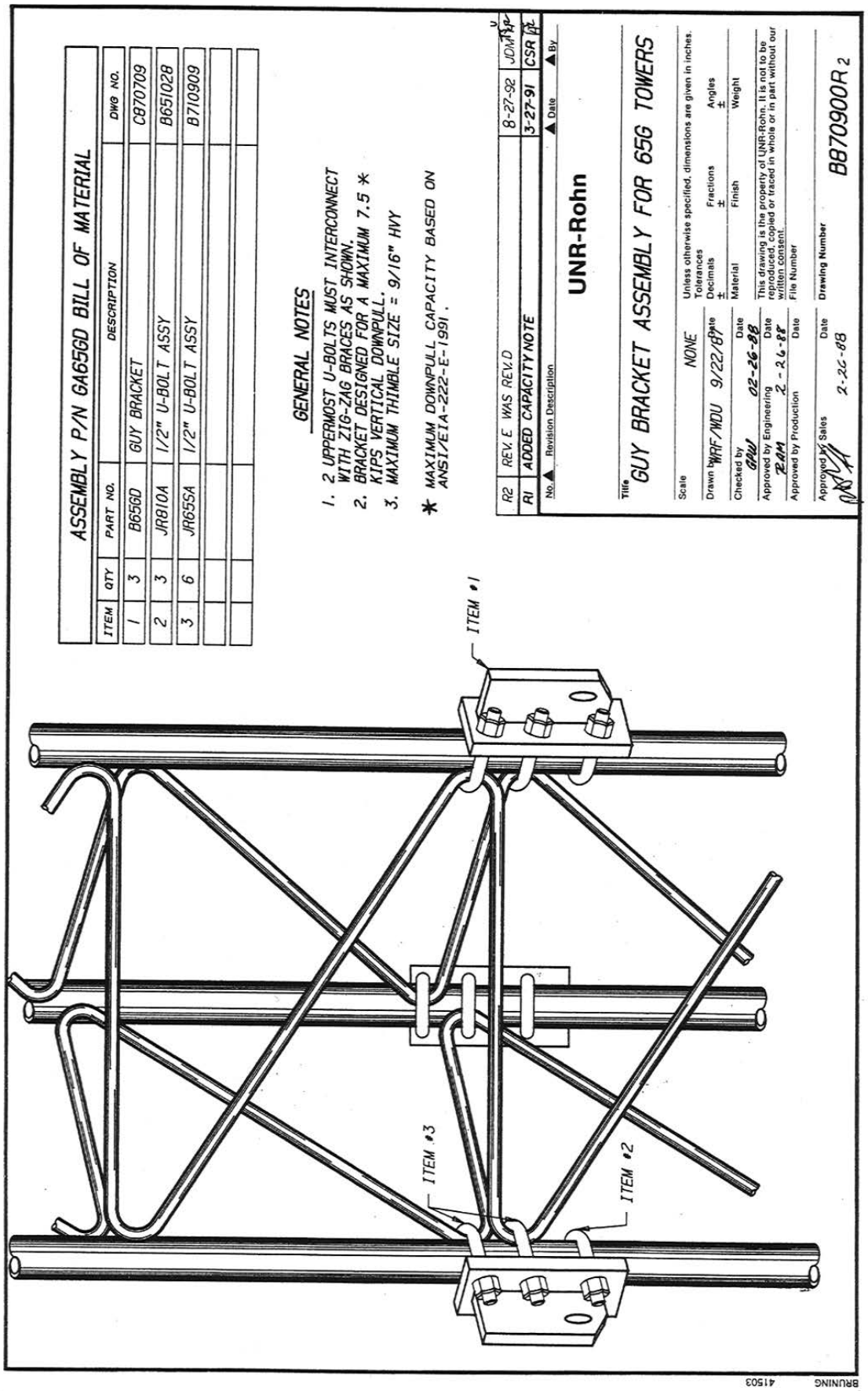

ASSEMBLY P/N GA65GD BILL OF MATERIAL

ITEM	QTY	PART NO.	DESCRIPTION	DWG NO.
1	3	B65GD	GUY BRACKET	C870709
2	3	JRB10A	1/2" U-BOLT ASSY	B651028
3	6	JR65SA	1/2" U-BOLT ASSY	B710909

GENERAL NOTES

1. 2 UPPERMOST U-BOLTS MUST INTERCONNECT WITH ZIG-ZAG BRACES AS SHOWN.
2. BRACKET DESIGNED FOR A MAXIMUM 7.5 * KIPS VERTICAL DOWNPULL.
3. MAXIMUM THIMBLE SIZE = 9/16" HVY

* MAXIMUM DOWNPULL CAPACITY BASED ON ANSI/EIA-222-E-1991.

No.	Revision Description	Date	By
R2	REV. E WAS REV. D	8-27-92	JDM
R1	ADDED CAPACITY NOTE	3-27-91	CSR

UNR-Rohn

Title: GUY BRACKET ASSEMBLY FOR 65G TOWERS

Scale: NONE

Unless otherwise specified, dimensions are given in inches.
Tolerances: Decimals ±; Fractions ±; Angles ±

Drawn by WAF/WDU 9/22/87 Date
Checked by GPW 02-26-88 Date
Approved by Engineering RAM 2-26-88 Date
Approved by Production Date
Approved by Sales 2-26-88 Date

Material
Finish
Weight

File Number
Drawing Number B870900R2

BRUNING 41503

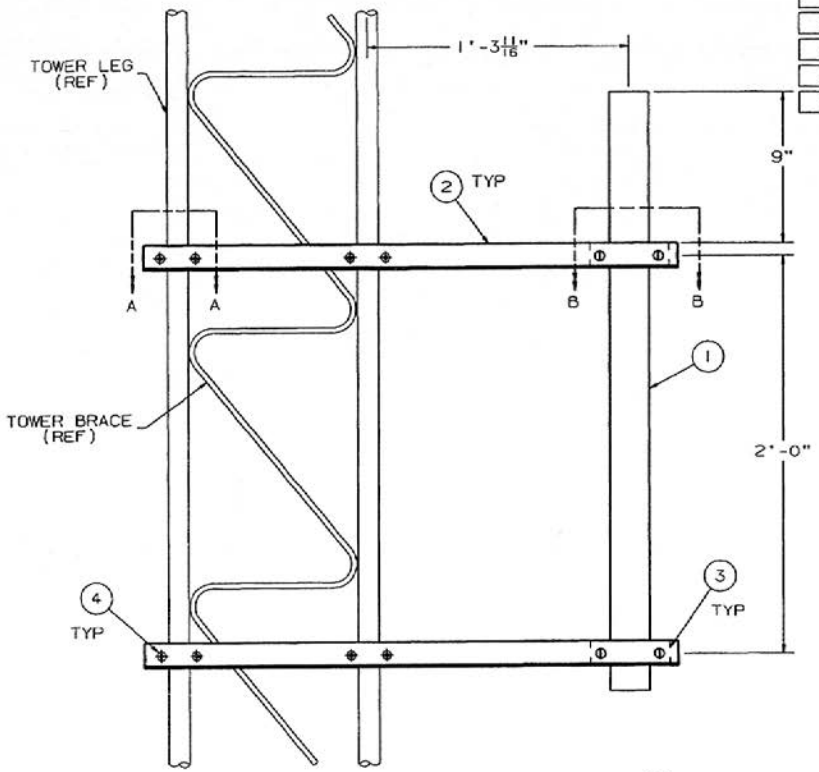

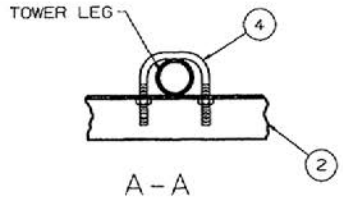

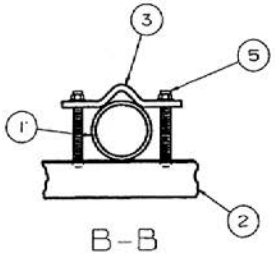

BILL OF MATERIAL

ITEM	QTY	PART NO	DESCRIPTION	DWG NO
1	1	SEE ASSY P/N	MOUNTING PIPE OR TUBE	N/A
2	2	FY206	MOUNTING ANGLE 1-1/2 X 1-1/2 X 12GA.	A950180
3	2	D114	SADDLE CLAMP	N/A
4	4	FJR42	U-BOLT	N/A
5	4	S180771	5/16 X 2-1/2 BOLT	N/A

ASSY P/N: DDM150 (TUBE 1-1/2")

(TUBE 1.5" O.D. X 3' LG.)
(P/N FY207)

ASSY P/N: DDM166 (PIPE 1-1/4")

(PIPE 1.66" O.D. X 3' LG.)
(P/N FY208)

ASSY P/N: DDM238 (PIPE 2")

(PIPE 2.375" O.D. X 3' LG.)
(P/N FY209)

NOTE: OUTSTANDING LEG OF TOWER HAS BEEN OMITTED FOR CLARITY.

NOTE: MOUNTING ANGLE MUST BE MOUNTED AS CLOSE TO LEG/BRACE INTERSECTION AS POSSIBLE.

TOTAL TOWER LOAD MUST NOT EXCEED CAPACITY OF 25G TOWER.

UNR-ROHN
Division of UNR, Inc.

Title
DBS MODEL -
TOWER DISH MOUNT

Scale: NONE
Unless otherwise specified, dimensions are given in inches. Tolerances are as noted.

		Date
Drawn by	SDM	7-18-95
Checked by	MD	8-11-95
Approved by Engineering		
Approved by Production	BH	8-11-95
Approved by Sales	DL	8-22-95

Material | Finish | Weight

File Number EF4039SM
Drawing Number C950130R1
Drawing Type : CATALOG

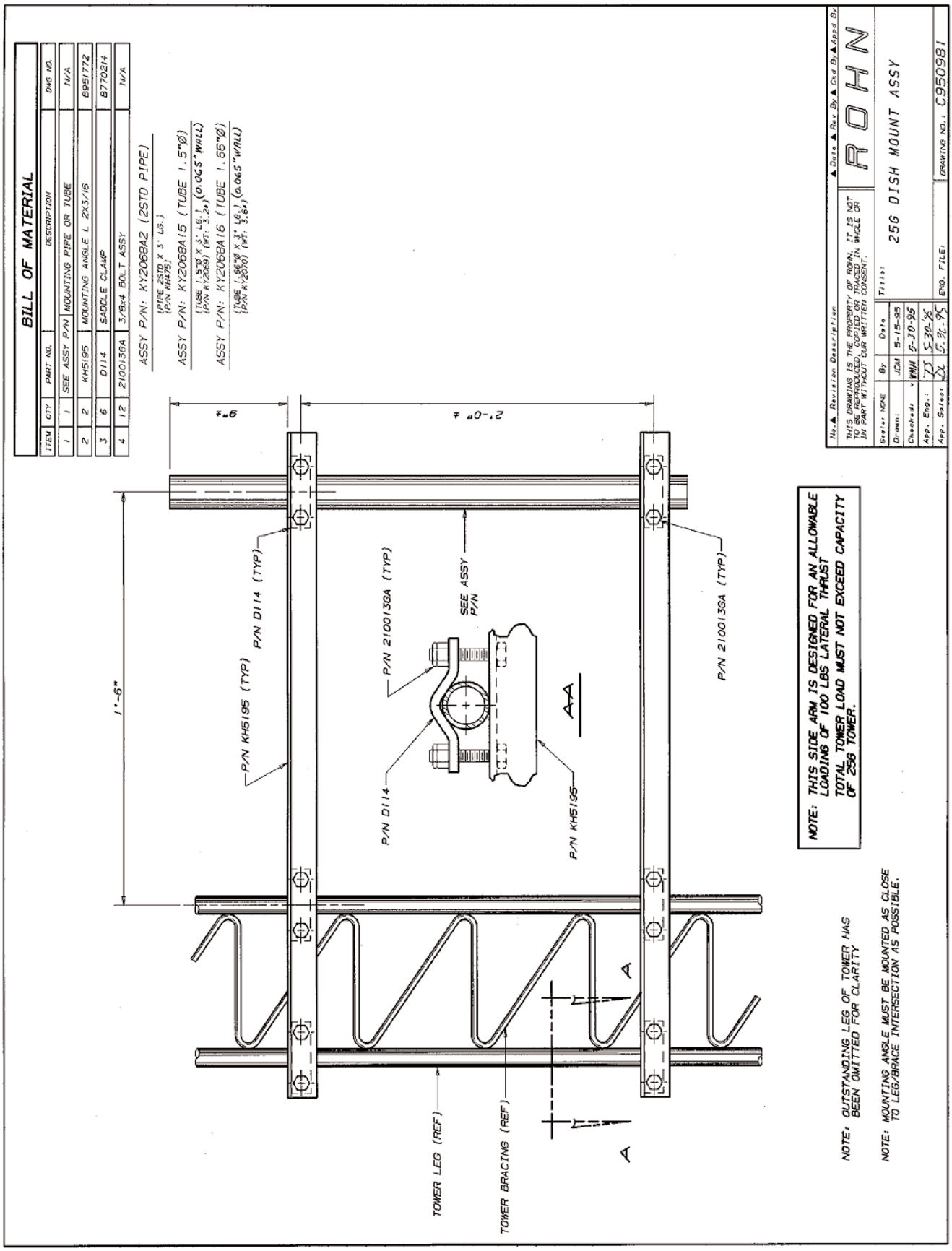
BILL OF MATERIAL
ITEM | QTY | PART NO. | DESCRIPTION | DWG NO.
1 | 1 | SEE ASSY P/N | MOUNTING PIPE OR TUBE | N/A
2 | 2 | KH5195 | MOUNTING ANGLE L 2X3/16 | B951772
3 | 6 | D114 | SADDLE CLAMP | B770214
4 | 12 | 2100136A | 3/8x4 BOLT ASSY | N/A
ASSY P/N: KY2068A2 (2STD PIPE)
(PIPE 2STD X 3' LG.)
(P/N HH795)
ASSY P/N: KY2068A15 (TUBE 1.5"Ø)
(TUBE 1.5"Ø X 3' LG.) (0.065" WALL)
(P/N KY2269) (WT: 3.2#)
ASSY P/N: KY2068A16 (TUBE 1.66"Ø)
(TUBE 1.66"Ø X 3' LG.) (0.065" WALL)
(P/N KY2070) (WT: 3.6#)
9"
2'-0"
1'-6"
P/N KH5195 (TYP)
P/N D114 (TYP)
P/N 2100136A (TYP)
SEE ASSY P/N
P/N 2100136A (TYP)
P/N D114
P/N KH5195
A-A
A
A
TOWER LEG (REF)
TOWER BRACING (REF)
NOTE: THIS SIDE ARM IS DESIGNED FOR AN ALLOWABLE LOADING OF 100 LBS LATERAL THRUST TOTAL TOWER LOAD MUST NOT EXCEED CAPACITY OF 256 TOWER.
NOTE: OUTSTANDING LEG OF TOWER HAS BEEN OMITTED FOR CLARITY
NOTE: MOUNTING ANGLE MUST BE MOUNTED AS CLOSE TO LEG/BRACE INTERSECTION AS POSSIBLE.
No. ▲ Revision Description
▲ Date ▲ Rev By ▲ Chd By ▲ Appd By
THIS DRAWING IS THE PROPERTY OF ROHN, IT IS NOT TO BE REPRODUCED OR TRANSFERRED IN WHOLE OR IN PART WITHOUT OUR WRITTEN CONSENT.
ROHN
Scale: NONE
Drawn: JCM 5-15-95
Checked: WMN 5-30-95
App. Eng.: TJ 5-30-95
App. Sales: DL 5-30-95
Title: 256 DISH MOUNT ASSY
ENG. FILE:
DRAWING NO.: C950981

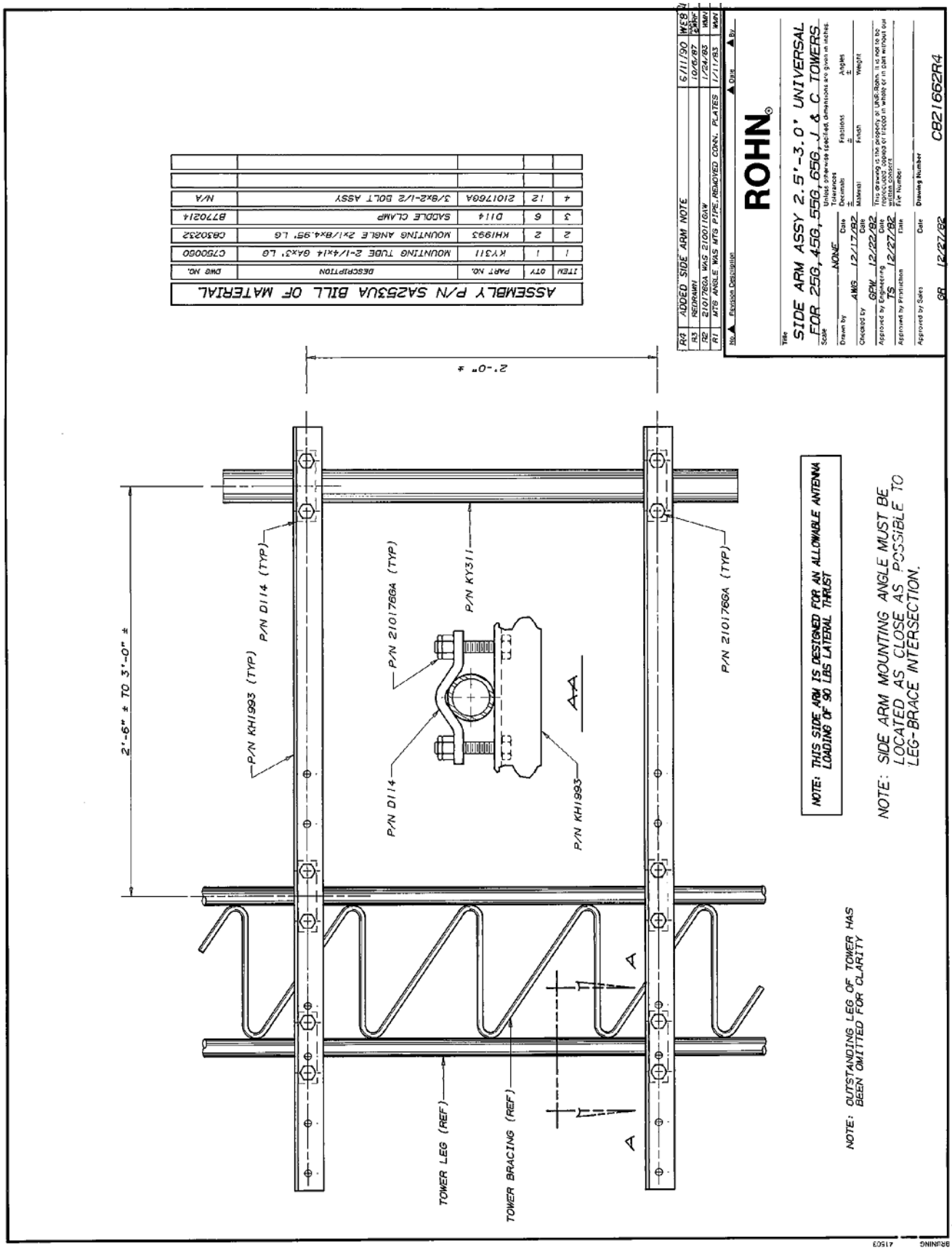
ASSEMBLY P/N SA253UA BILL OF MATERIAL
ITEM | QTY | PART NO. | DESCRIPTION | DWG NO.
1 | 1 | KY311 | MOUNTING TUBE 2-1/4x14 GAx3' LG | C750060
2 | 2 | KH1993 | MOUNTING ANGLE 2x1/8x4.95' LG | C830232
3 | 6 | D114 | SADDLE CLAMP | B770214
4 | 12 | 2101760A | 3/8x2-1/2 BOLT ASSY | N/A
R4 ADDED SIDE ARM NOTE 5/11/90 WEB
R3 REDRAWN 10/5/87 PWF
R2 2101760A WAS 2100176UW 1/24/83 MWM
R1 MTG ANGLE WAS MTG PIPE, REMOVED CONN. PLATES 1/11/83 MWM
No. Revision Description By Date
ROHN
Title
SIDE ARM ASSY 2.5'-3.0' UNIVERSAL FOR 25G, 45G, 55G, 65G, J & C TOWERS
Scale NONE
Drawn by AWG 12/17/82
Checked by GEW 12/22/82
Approved by Engineering TS 12/27/82
Approved by Production
Approved by Sales GR 12/27/82
Tolerances: Unless otherwise specified, dimensions are given in inches. Decimals ± Fractions ± Angles ±
Material Finish Weight
This drawing is the property of ROHN. It is not to be reproduced, copied or lended in whole or in part without our written consent.
File Number
Drawing Number C821662R4
2'-0" ±
2'-6" ± TO 3'-0" ±
P/N D114 (TYP)
P/N KH1993 (TYP)
P/N 2101760A (TYP)
P/N KY311
P/N 2101760A (TYP)
P/N D114
P/N KH1993
A-A
A
A
TOWER LEG (REF)
TOWER BRACING (REF)
NOTE: THIS SIDE ARM IS DESIGNED FOR AN ALLOWABLE ANTENNA LOADING OF 90 LBS LATERAL THRUST
NOTE: SIDE ARM MOUNTING ANGLE MUST BE LOCATED AS CLOSE AS POSSIBLE TO LEG-BRACE INTERSECTION.
NOTE: OUTSTANDING LEG OF TOWER HAS BEEN OMITTED FOR CLARITY
BRJUNING 4150J

BILL OF MATERIALS

ASSY NO.	PART NO.	QTY	DESCRIPTION	DWG NO.
DM25G2	KY1550	2	DISH MOUNT BRACKET	B881437
	KH275	1	MOUNTING PIPE 2"STDX5'	B770160
	KY1549	2	MOUNTING CLIP ANGLE	B881436
	210018GA	4	BOLT ASSY 1/2 X 1 1/2"	C770404
	JR66A	8	U-BOLT ASSY 3/8"	B651028
	JR61A	4	U-BOLT ASSY 3/8"	B651028
DM254	KY1550	2	DISH MOUNT BRACKET	B881437
	KH279	1	MOUNTING PIPE 4"STDX5'	B770160
	KY1549	2	MOUNTING CLIP ANGLE	B881436
	210018GA	4	BOLT ASSY 1/2 X 1 1/2"	C770404
	JR66A	8	U-BOLT ASSY 3/8"	B651028
	JR63A	4	U-BOLT ASSY 3/8"	B651028
DM45G2	KY1550	2	DISH MOUNT BRACKET	B881437
	KH275	1	MOUNTING PIPE 2"STDX5'	B770160
	KY1549	2	MOUNTING CLIP ANGLE	B881436
	210018GA	4	BOLT ASSY 1/2 X 1 1/2"	C770404
	JR65A	8	U-BOLT ASSY 3/8"	B651028
	JR61A	4	U-BOLT ASSY 3/8"	B651028
DM454	KY1550	2	DISH MOUNT BRACKET	B881437
	KH279	1	MOUNTING PIPE 4"STDX5'	B770160
	KY1549	2	MOUNTING CLIP ANGLE	B881436
	210018GA	4	BOLT ASSY 1/2 X 1 1/2"	C770404
	JR65A	8	U-BOLT ASSY 3/8"	B651028
	JR63A	4	U-BOLT ASSY 3/8"	B651028
DM55G2	KY1550	2	DISH MOUNT BRACKET	B881437
	KH275	1	MOUNTING PIPE 2"STDX5'	B770160
	KY1549	2	MOUNTING CLIP ANGLE	B881436
	210018GA	4	BOLT ASSY 1/2 X 1 1/2"	C770404
	JR65A	8	U-BOLT ASSY 3/8"	B651028
	JR61A	4	U-BOLT ASSY 3/8"	B651028
DM554	KY1550	2	DISH MOUNT BRACKET	B881437
	KH279	1	MOUNTING PIPE 4"STDX5'	B770160
	KY1549	2	MOUNTING CLIP ANGLE	B881436
	210018GA	4	BOLT ASSY 1/2 X 1 1/2"	C770404
	JR65A	8	U-BOLT ASSY 3/8"	B651028
	JR63A	4	U-BOLT ASSY 3/8"	B651028
DMJJ2	KY1552	2	DISH MOUNT BRACKET	B881441
	KH275	1	MOUNTING PIPE 2"STDX5'	B770160
	KY1549	2	MOUNTING CLIP ANGLE	B881436
	210018GA	4	BOLT ASSY 1/2 X 1 1/2"	C770404
	JR65A	8	U-BOLT ASSY 3/8"	B651028
	JR61A	4	U-BOLT ASSY 3/8"	B651028
DMJJ4	KY1552	2	DISH MOUNT BRACKET	B881441
	KH279	1	MOUNTING PIPE 4"STDX5'	B770160
	KY1549	2	MOUNTING CLIP ANGLE	B881436
	210018GA	4	BOLT ASSY 1/2 X 1 1/2"	C770404
	JR65A	8	U-BOLT ASSY 3/8"	B651028
	JR63A	4	U-BOLT ASSY 3/8"	B651028

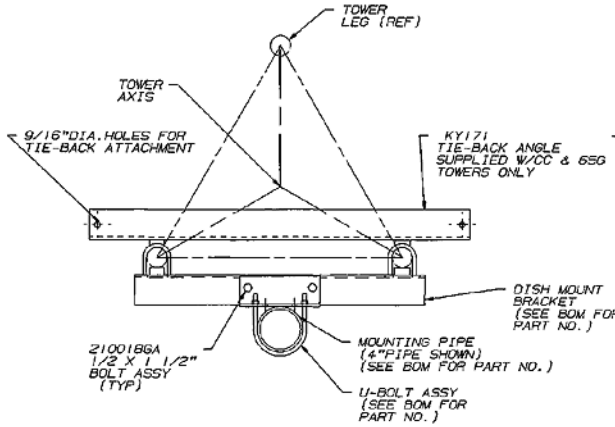

PLAN

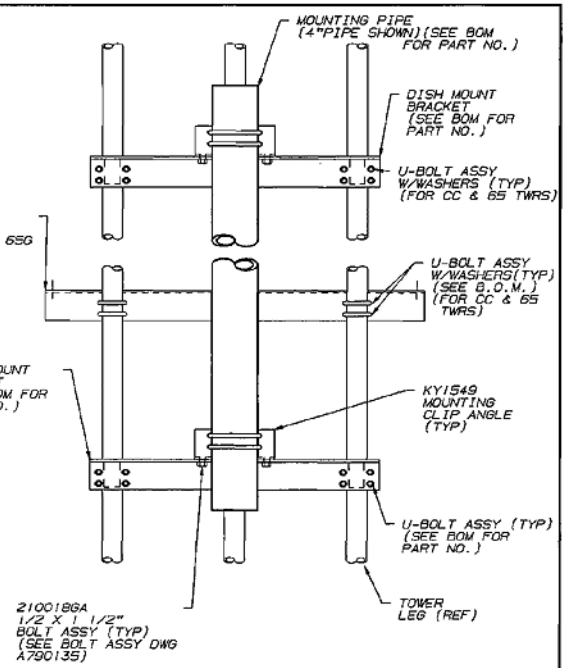

ELEVATION

ASSY NO.	PART NO.	QTY	DESCRIPTION	DWG NO.
DM654	KY1555	2	DISH MOUNT BRACKET	B881440
	KH279	1	MOUNTING PIPE 4"STDX5'	B770160
	KY1549	2	MOUNTING CLIP ANGLE	B881436
	210018GA	4	BOLT ASSY 1/2 X 1 1/2"	C770404
	JR60A	8	U-BOLT ASSY 3/8"	B651028
	JR63A	4	U-BOLT ASSY 3/8"	B651028
	250008G	16	FLAT WASHERS 3/8"	N/A
DM654TB	KY1555	2	DISH MOUNT BRACKET	B881440
	KY171	1	TIE-BACK ANGLE	B760906
	KH279	1	MOUNTING PIPE 4"STDX5'	B770160
	KY1549	2	MOUNTING CLIP ANGLE	B881436
	210018GA	4	BOLT ASSY 1/2 X 1 1/2"	C770404
	JR60A	12	U-BOLT ASSY 3/8"	B651028
	JR63A	4	U-BOLT ASSY 3/8"	B651028
	250008G	24	FLAT WASHERS 3/8"	N/A
DMCC4	KY1555	2	DISH MOUNT BRACKET	B881440
	KH279	1	MOUNTING PIPE 4"STDX5'	B770160
	KY1549	2	MOUNTING CLIP ANGLE	B881436
	210018GA	4	BOLT ASSY 1/2 X 1 1/2"	C770404
	JR60A	8	U-BOLT ASSY 3/8"	B651028
	JR63A	4	U-BOLT ASSY 3/8"	B651028
	250008G	16	FLAT WASHERS 3/8"	N/A
DMCC4TB	KY1555	2	DISH MOUNT BRACKET	B881440
	KY171	1	TIE-BACK ANGLE	B760906
	KH279	1	MOUNTING PIPE 4"STDX5'	B770160
	KY1549	2	MOUNTING CLIP ANGLE	B881436
	210018GA	4	BOLT ASSY 1/2 X 1 1/2"	C770404
	JR60A	12	U-BOLT ASSY 3/8"	B651028
	JR63A	4	U-BOLT ASSY 3/8"	B651028
	250008G	24	FLAT WASHERS 3/8"	N/A

GENERAL NOTES

1. DISH MOUNT SUPPLIED WITH 4"STD (4 1/2"O.D.) OR 2"STD (2 3/8"O.D) MOUNTING PIPE. (CC & 65G TOWER SUPPLIED WITH 4"STD MOUNTING PIPE ONLY.)
2. DISH MOUNT BRACKETS AND TIE-BACK ANGLE MAY BE MOUNTED ON FACES OTHER THAN SHOWN PER ORIENTATION REQUIREMENTS.
3. DISH TIE-BACK STRUT (BY OTHERS) MUST BE AS CLOSE TO PERPENDICULAR AS POSSIBLE TO DISH FACE.
4. FLAT WASHERS ARE PROVIDED FOR ALL SLOTTED HOLES.
5. FABRICATION DRAWINGS. IF REFERENCED, ARE FOR SHOP USE ONLY.
6. PAL NUTS ARE PROVIDED FOR ALL U-BOLTS /AND BOLTS (SEE DWG.NO.A790135).
7. MOUNTING BRACKETS MUST BE LOCATED AS CLOSE AS POSSIBLE TO LEG-BRACE INTERSECTION.

No.	Revision Description	Date	Rev By	Ckd By	Appd By
R5	REV. TO KD, REDRAWN & REV 65 LEG U-BOLTS	7-12-90	RKB	KW	TS

R O H N

	By	Date
Scale: NONE		
Drawn:	MDI	10-13-76
Checked:	WDU	10-15-76
App. Eng.:	CW	10-15-76
App. Sales:	GR	10-28-76

Title: DISH MOUNT ASSEMBLY FOR MODEL NO'S 25,45,55,J,65 & C TOWERS

ENG. FILE:

DRAWING NO.: C760796 R5

DESIGN NOTE

THESE TOP DISH MOUNT ASSEMBLIES ARE DESIGNED TO BE MOUNTED ON 25G SINGLE BRACED SECTIONS ONLY.

TORQUE ARM BILL OF MATERIALS

ASS'Y NO.	PART NO.	QUAN.	DESCRIPTION	DRAWING NO.
TA25	KC90	1	TORQUE ARM	B760795
	210003GA	3	5/16 X 2-3/8" BOLT ASSEMBLY	C770404
	210075GA	3	1/4 X 2" BOLT ASSEMBLY	C770404

DISH MOUNT BILL OF MATERIALS

ASS'Y NO.	PART NO.	QUAN.	DESCRIPTION	DRAWING NO.
25TDM2S3KD	KH1617	1	MTG. PIPE 2"STD. X 7'-0" LG.	B770160
	KY1180	1	TOP MOUNTING PLATE	C850312
	KY1174	1	BOTTOM MOUNTING PLATE	C850313
	JR66A	3	U-BOLT ASSEMBLY	B651028
	210192G	6	5/8 X 3 1/2" BOLT (FULLY THREADED)	C770404
	220037GA	3	5/16 X 1-1/2" BOLT ASSEMBLY	C770404
	230018	12	5/8" HVY. HEX. NUT	N/A
	220029GA	3	1/4 X 1-1/2" BOLT ASSEMBLY	C770404
25TDM25S3KD	KH2582	1	MTG. PIPE 2-1/2" STD. X 7'-0" LG.	B770160
	KY1180	1	TOP MOUNTING PLATE	C850312
	KY1174	1	BOTTOM MOUNTING PLATE	C850313
	JR66A	3	U-BOLT ASSEMBLY	B651028
	210192G	6	5/8 X 3 1/2" BOLT (FULLY THREADED)	C770404
	220037GA	3	5/16 X 1-1/2" BOLT ASSEMBLY	C770404
	230018	12	5/8" HVY. HEX. NUT	N/A
	220029GA	3	1/4 X 1-1/2" BOLT ASSEMBLY	C770404
25TDM3S3KD	KH2583	1	MTG. PIPE 3" STD. X 7'-0" LG.	B770160
	KY1180	1	TOP MOUNTING PLATE	C850312
	KY1174	1	BOTTOM MOUNTING PLATE	C850313
	JR66A	3	U-BOLT ASSEMBLY	B651028
	210192G	6	5/8 X 3 1/2" BOLT (FULLY THREADED)	C770404
	220037GA	3	5/16 X 1-1/2" BOLT ASSEMBLY	C770404
	230018	12	5/8" HVY. HEX. NUT	N/A
	220029GA	3	1/4 X 1-1/2" BOLT ASSEMBLY	C770404
25TDM35S3KD	KH2584	1	MTG. PIPE 3-1/2" STD. X 7'-0" LG	B770160
	KY1180	1	TOP MOUNTING PLATE	C850312
	KY1174	1	BOTTOM MOUNTING PLATE	C850313
	JR66A	3	U-BOLT ASSEMBLY	B651028
	210192G	6	5/8 X 3 1/2" BOLT (FULLY THREADED)	C770404
	220037GA	3	5/16 X 1-1/2" BOLT ASSEMBLY	C770404
	230018	12	5/8" HVY. HEX. NUT	N/A
	220029GA	3	1/4 X 1-1/2" BOLT ASSEMBLY	C770404
25TDMKD (MOUNT ONLY-LESS MTG. PIPE)	KY1180	1	TOP MOUNTING PLATE	C850312
	KY1174	1	BOTTOM MOUNTING PLATE	C850313
	JR66A	3	U-BOLT ASSEMBLY	B651028
	210192G	6	5/8 X 3 1/2" BOLT (FULLY THREADED)	C770404
	220037GA	3	5/16 X 1-1/2" BOLT ASSEMBLY	C770404
	230018	12	5/8" HVY. HEX. NUT	N/A
	220029GA	3	1/4 X 1-1/2" BOLT ASSEMBLY	C770404

** LONGER BOLTS ARE SUPPLIED WITH TORQUE ARM.

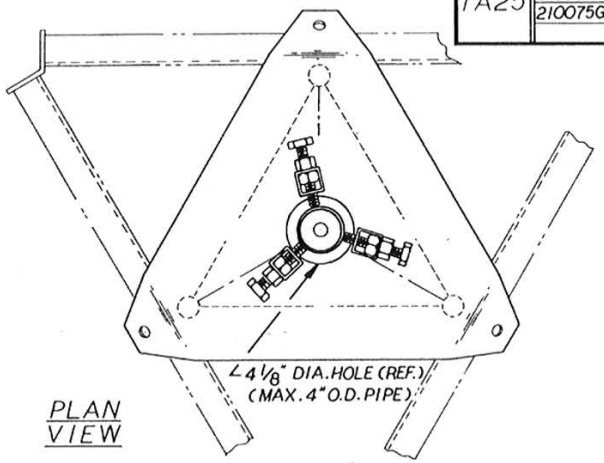

PLAN VIEW

GENERAL NOTES

1. THE TOP DISH MOUNTS AND THE TORQUE ARMS ARE SEPARATE UNITS, AND MAY BE USED IN CONJUNCTION WITH EACH OTHER, AS SHOWN, OR AS SEPARATE UNITS. THE TORQUE ARM MAY BE INSTALLED AT THE LEVEL OF ANY TOWER JOINT. WHEN THE TORQUE ARM IS INSTALLED AS SHOWN, THE GUYS ARE TO BE ATTACHED TO THE TORQUE ARM ONLY.
2. ALL FABRICATION DRAWINGS REFERENCED, ARE FOR SHOP USE ONLY.
3. PAL NUTS ARE PROVIDED WITH ALL U-BOLT AND BOLT ASSEMBLIES.

* DESIGN NOTE

THIS ANTENNA MOUNT IS DESIGNED IN ACCORDANCE WITH A.N.S.I. A58.1, "MIN. DESIGN LOADS FOR BUILDING & OTHER STRUCTURES," EXPOSURE B, 70 M.P.H., FOR A MAX. 6' DIA. SOLID, GRID OR MESH DISH (MAX. PROJ. AREA = 34 SQ. FT.)

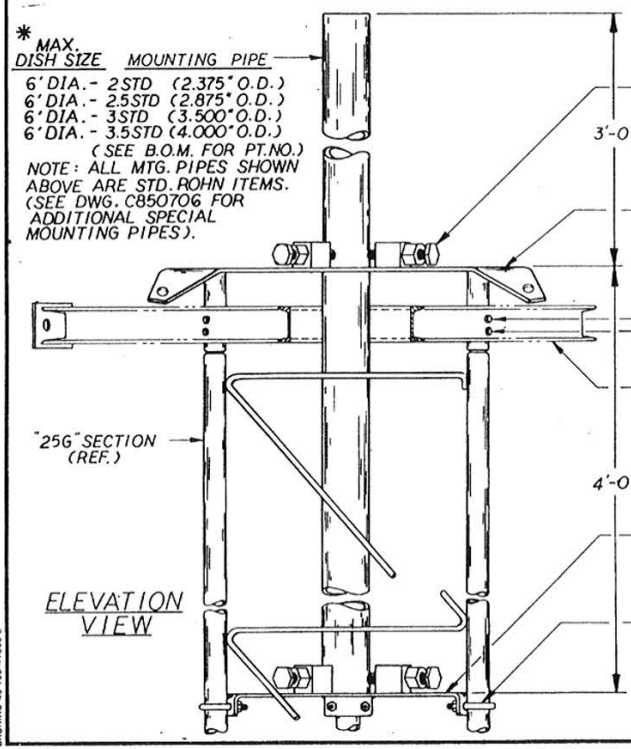

ELEVATION VIEW

No.	Revision Description	Date	By
R1	ADDED MTG PIPE NOTE	4-30-85	GPW

UNR-Rohn
Division of UNR, Inc

Title: MOUNT DISH ASSY TOP 25G KD

TOP DISH MOUNT & TORQUE ARM ASS'Y FOR TOWER MODEL NO. 25G

Scale: NONE

Drawn by: GPW 01-14-85

Checked by: WDL 1-18-85

Approved by Engineering: Ram 3-6-85

Approved by Production: Date

Approved by Sales: 3-13-85

Unless otherwise specified, dimensions are given in inches. Tolerances: Decimals ±, Fractions ±, Angles ±

Material: Finish: Weight:

File Number:

Drawing Number: C850314 R1

BRUNING 40-105 41503-2

DESIGN NOTE

THESE TOP DISH MOUNT ASSEMBLIES ARE DESIGNED TO BE MOUNTED ON 45G SINGLE BRACED SECTIONS ONLY.

TORQUE ARM BILL OF MATERIALS

ASS'Y NO.	PART NO.	QUAN.	DESCRIPTION	DRAWING NO.
TA45	TA45	1	TORQUE ARM	B760796
	210016GA	3 (REF.)	7/16 X 2-1/2" BOLT ASSEMBLY	C770404
	210003GA	3 (REF.)	5/16 X 2-3/8" BOLT ASSEMBLY	C770404

DISH MOUNT BILL OF MATERIALS

ASS'Y NO.	PART NO.	QUAN.	DESCRIPTION	DRAWING NO.
45TDM2S3KD	KH1617	1	MTG. PIPE 2"STD. X 7'-0" LG.	B770160
	KY1181	1	TOP MOUNTING PLATE	C850312
	KY1176	1	BOTTOM MOUNTING PLATE	C850325
	JR66A	3	U-BOLT ASSEMBLY	B651028
	220049G	8	5/8 X 4" BOLT (FULLY THREADED)	C770404
	210016GA	3	7/16 X 2-1/2" BOLT ASSEMBLY	C770404
	230018	16	5/8" HVY. HEX. NUT	N/A
	210003GA	3	5/16 X 2-3/8" BOLT ASSEMBLY	C770404
45TDM25S3KD	KH2582	1	MTG. PIPE 2-1/2" STD. X 7'-0" LG.	B770160
	KY1181	1	TOP MOUNTING PLATE	C850312
	KY1176	1	BOTTOM MOUNTING PLATE	C850325
	JR66A	3	U-BOLT ASSEMBLY	B651028
	220049G	8	5/8 X 4" BOLT (FULLY THREADED)	C770404
	210016GA	3	7/16 X 2-1/2" BOLT ASSEMBLY	C770404
	230018	16	5/8" HVY. HEX. NUT	N/A
	210003GA	3	5/16 X 2-3/8" BOLT ASSEMBLY	C770404
45TDM3S3KD	KH2583	1	MTG. PIPE 3" STD. X 7'-0" LG.	B770160
	KY1181	1	TOP MOUNTING PLATE	C850312
	KY1176	1	BOTTOM MOUNTING PLATE	C850325
	JR66A	3	U-BOLT ASSEMBLY	B651028
	220049G	8	5/8 X 4" BOLT (FULLY THREADED)	C770404
	210016GA	3	7/16 X 2-1/2" BOLT ASSEMBLY	C770404
	230018	16	5/8" HVY. HEX. NUT	N/A
	210003GA	3	5/16 X 2-3/8" BOLT ASSEMBLY	C770404
45TDM35S3KD	KH2584	1	MTG. PIPE 3-1/2" STD. X 7'-0" LG	B770160
	KY1181	1	TOP MOUNTING PLATE	C850312
	KY1176	1	BOTTOM MOUNTING PLATE	C850325
	JR66A	3	U-BOLT ASSEMBLY	B651028
	220049G	8	5/8 X 4" BOLT (FULLY THREADED)	C770404
	210016GA	3	7/16 X 2-1/2" BOLT ASSEMBLY	C770404
	230018	16	5/8" HVY. HEX. NUT	N/A
	210003GA	3	5/16 X 2-3/8" BOLT ASSEMBLY	C770404
45TDM4S3KD	KY1181	1	TOP MOUNTING PLATE	C850312
	KY1176	1	BOTTOM MOUNTING PLATE	C850325
	JR66A	3	U-BOLT ASSEMBLY	B651028
	220049G	8	5/8 X 4" BOLT (FULLY THREADED)	C770404
	210016GA	3	7/16 X 2-1/2" BOLT ASSEMBLY	C770404
	230018	16	5/8" HVY. HEX. NUT	N/A
	210003GA	3	5/16 X 2-3/8" BOLT ASSEMBLY	C770404
	KH2653	1	MTG. PIPE 4" STD. X 7'-0" LG	B770160

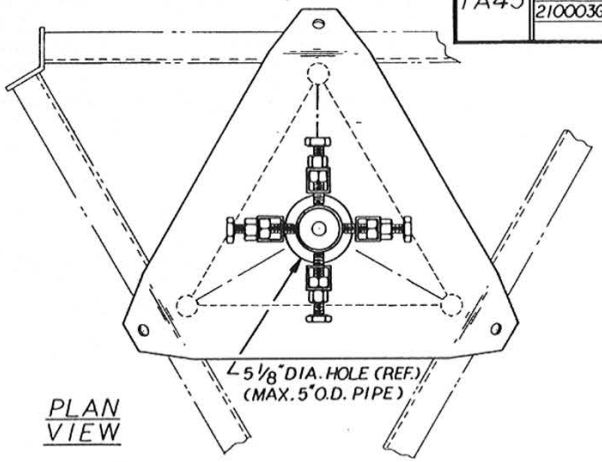

PLAN VIEW

GENERAL NOTES

1. THE TOP DISH MOUNTS AND THE TORQUE ARMS ARE SEPARATE UNITS, AND MAY BE USED IN CONJUNCTION WITH EACH OTHER, AS SHOWN, OR AS SEPARATE UNITS. THE TORQUE ARM MAY BE INSTALLED AT THE LEVEL OF ANY TOWER JOINT. WHEN THE TORQUE ARM IS INSTALLED AS SHOWN, THE GUYS ARE TO BE ATTACHED TO THE TORQUE ARM ONLY.
2. ALL FABRICATION DRAWINGS REFERENCED, ARE FOR SHOP USE ONLY.
3. PAL NUTS ARE PROVIDED WITH ALL U-BOLT AND BOLT ASSEMBLIES.

* DESIGN NOTE

THIS ANTENNA MOUNT IS DESIGNED IN ACCORDANCE WITH A.N.S.I. A58.1 "MIN. DESIGN LOADS FOR BUILDINGS & OTHER STRUCTURES." EXPOSURE B, 70 M.P.H., FOR A MAX. 8' DIA. SOLID, GRID OR MESH DISH (MAX. PROJ. AREA = 60 SQ. FT.)

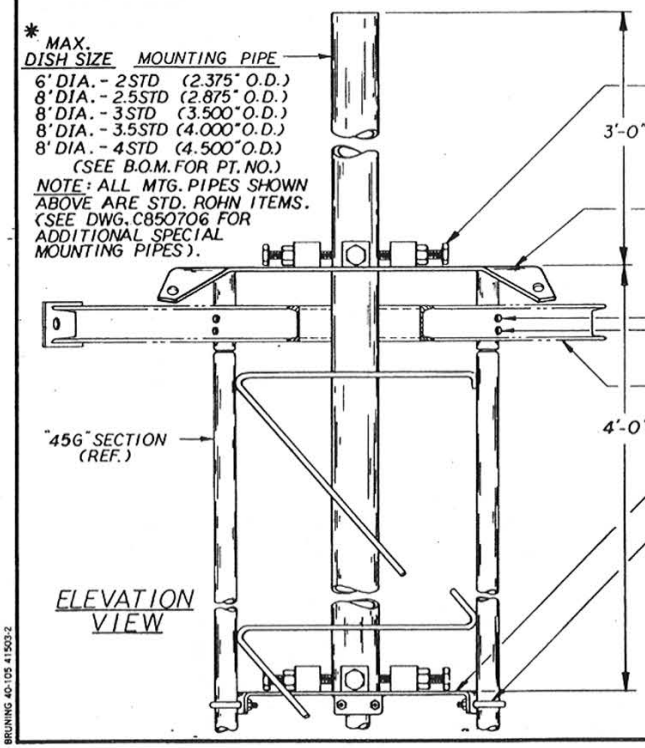

ELEVATION VIEW

45TDMKD (MOUNT ONLY - LESS PIPE)

PT. NO.	QUAN.	DESCRIPTION	DWG. NO.
KY1181	1	TOP MOUNTING PLATE	C850312
KY1176	1	BOTTOM MOUNTING PLATE	C850325
JR66A	3	U-BOLT ASSEMBLY	B651028
220049G	8	5/8 X 4" BOLT (FULLY THREADED)	C770404
210016GA	3	7/16 X 2-1/2" BOLT ASSEMBLY	C770404
230018	16	5/8" HVY. HEX. NUT	N/A
210003GA	3	5/16 X 2 3/8 BOLT ASSEMBLY	C770404

No.	Revision Description	Date	By
R1	ADDED 45TDM4S3KD & REV'D. BOLTS	4-24-85	GPW

UNR-Rohn
Division of UNR, Inc.

Title: MOUNT DISH ASSY TOP 45G KD

TOP DISH MOUNT & TORQUE ARM ASS'Y FOR TOWER MODEL NO. 45G

Scale: NONE
Drawn by: GPW 01-14-85
Checked by: WRC 1-18-85
Approved by Engineering: Pam 3-6-85
Approved by Production:
Approved by Sales: DMR - 3-13-85

Unless otherwise specified, dimensions are given in inches. Tolerances: Decimals ±, Fractions ±, Angles ±
Material / Finish / Weight

File Number
Drawing Number: C850315 R1

BRUNING 40-105 41503-2

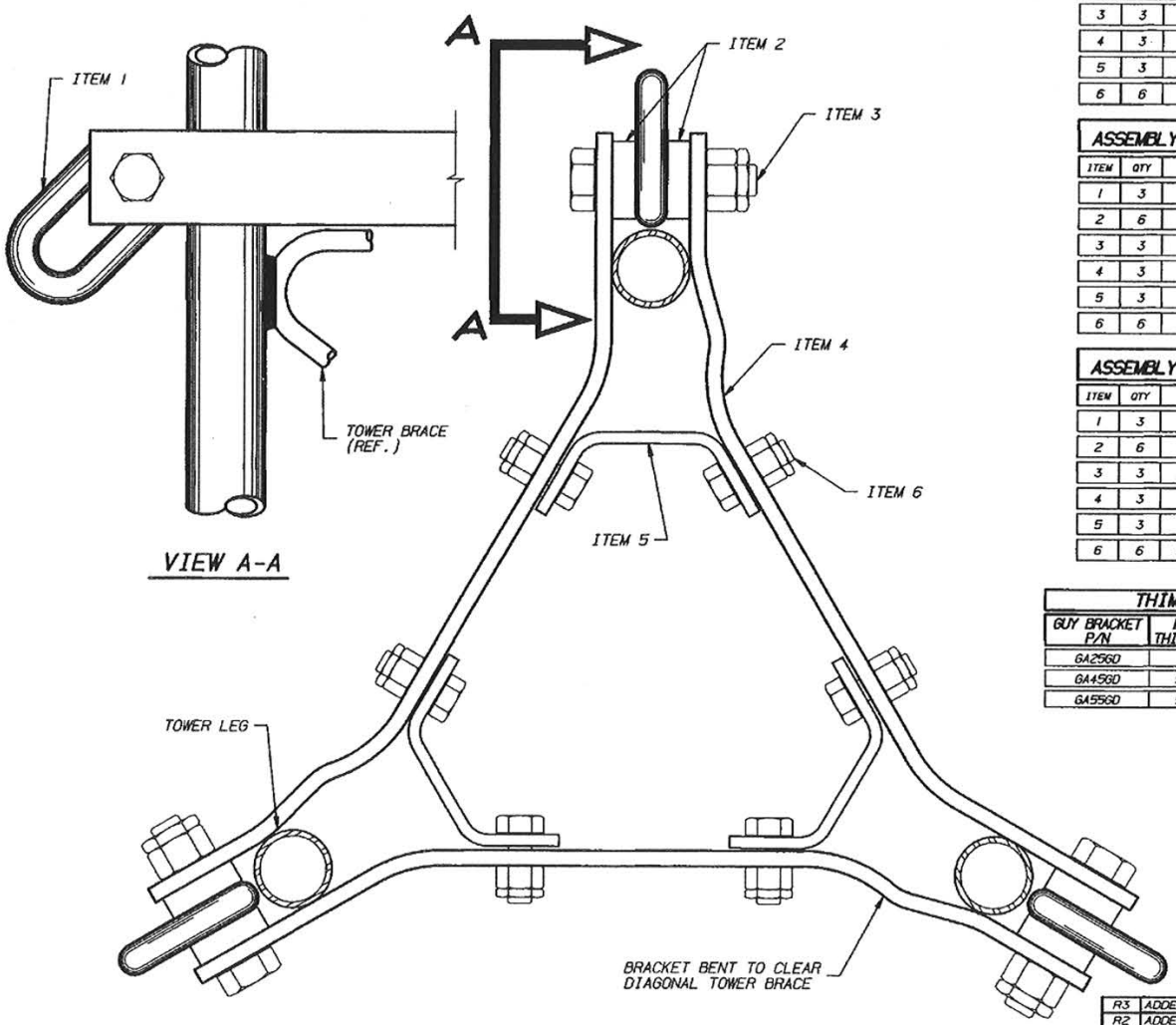

ASSEMBLY P/N GA25GD BILL OF MATERIAL (25G GUY BRACKET)

ITEM	QTY	PART NO.	DESCRIPTION	DWG NO.
1	3	GL1/2	GUY LINK	N/A
2	6	KH386	RINGFILL (3/8" THICK)	B770314
3	3	210152GA	BOLT ASSY 1/2 x 3	C770404
4	3	GB25D	GUY BRACKET	B870896
5	3	KC688	INNER BRACKET	B870897
6	6	210005GA	BOLT ASSY 3/8 x 1-1/4	C770404

ASSEMBLY P/N GA45GD BILL OF MATERIAL (45G GUY BRACKET)

ITEM	QTY	PART NO.	DESCRIPTION	DWG NO.
1	3	GL5/8	GUY LINK	N/A
2	6	KH3423	RINGFILL (5/16" THICK)	N/A
3	3	210072GA	BOLT ASSY 5/8 x 3-1/4	C770404
4	3	GB45D	GUY BRACKET	B870898
5	3	KC192	INNER BRACKET	C750083
6	6	210008GA	BOLT ASSY 3/8 x 1-1/2	C770404

ASSEMBLY P/N GA55GD BILL OF MATERIAL (55G GUY BRACKET)

ITEM	QTY	PART NO.	DESCRIPTION	DWG NO.
1	3	GL5/8	GUY LINK	N/A
2	6	KH3424	RINGFILL (7/16" THICK)	N/A
3	3	210054GA	BOLT ASSY 3/4 x 3-1/2	C770404
4	3	GB55D	GUY BRACKET	B870899
5	3	KC192	INNER BRACKET	C750082
6	6	210008GA	BOLT ASSY 3/8 x 1-1/2	C770404

THIMBLE DATA

GUY BRACKET P/N	MAXIMUM THIMBLE SIZE	MINIMUM THIMBLE SIZE
GA25GD	3/8THH	1/4TH-5/16THH
GA45GD	9/16THH	1/4TH-5/16THH
GA55GD	9/16THH	1/4TH-5/16THH

MAXIMUM VERTICAL DOWNPULL

25G	-	1.90 KIPS *
45G	-	3.40 KIPS *
55G	-	3.94 KIPS *

* MAXIMUM DOWNPULL CAPACITIES BASED ON ANSI/EIA-222-D-1986

NOTE: GUY BRACKET MUST BE INSTALLED ABOVE TOWER BRACE AS SHOWN IN VIEW A-A.

No.	Revision Description	Date	Rev By	Ckd By	Appd By
R3	ADDED BRACE TO VIEW A-A	4/22/91	WEB	WDU	TS
R2	ADDED CAPACITY NOTE	3/27/91	CSR	KTL	TS
R1	210152GA WAS 2100998A & 210072GA WAS 210036GA	4/14/88	RKB	WDU	TS

ROHN

Scale: NONE	By	Date
Drawn:	WDU	9/23/87
Checked:	GPW	4/15/88
App. Eng.:	RAM	4/15/88
App. Sales:	AL/RAK	4/15/88

Title: GUY BRACKET ASSEMBLY FOR 25, 45 & 55 TOWERS

ENG. FILE:

DRAWING NO.: C870710R3

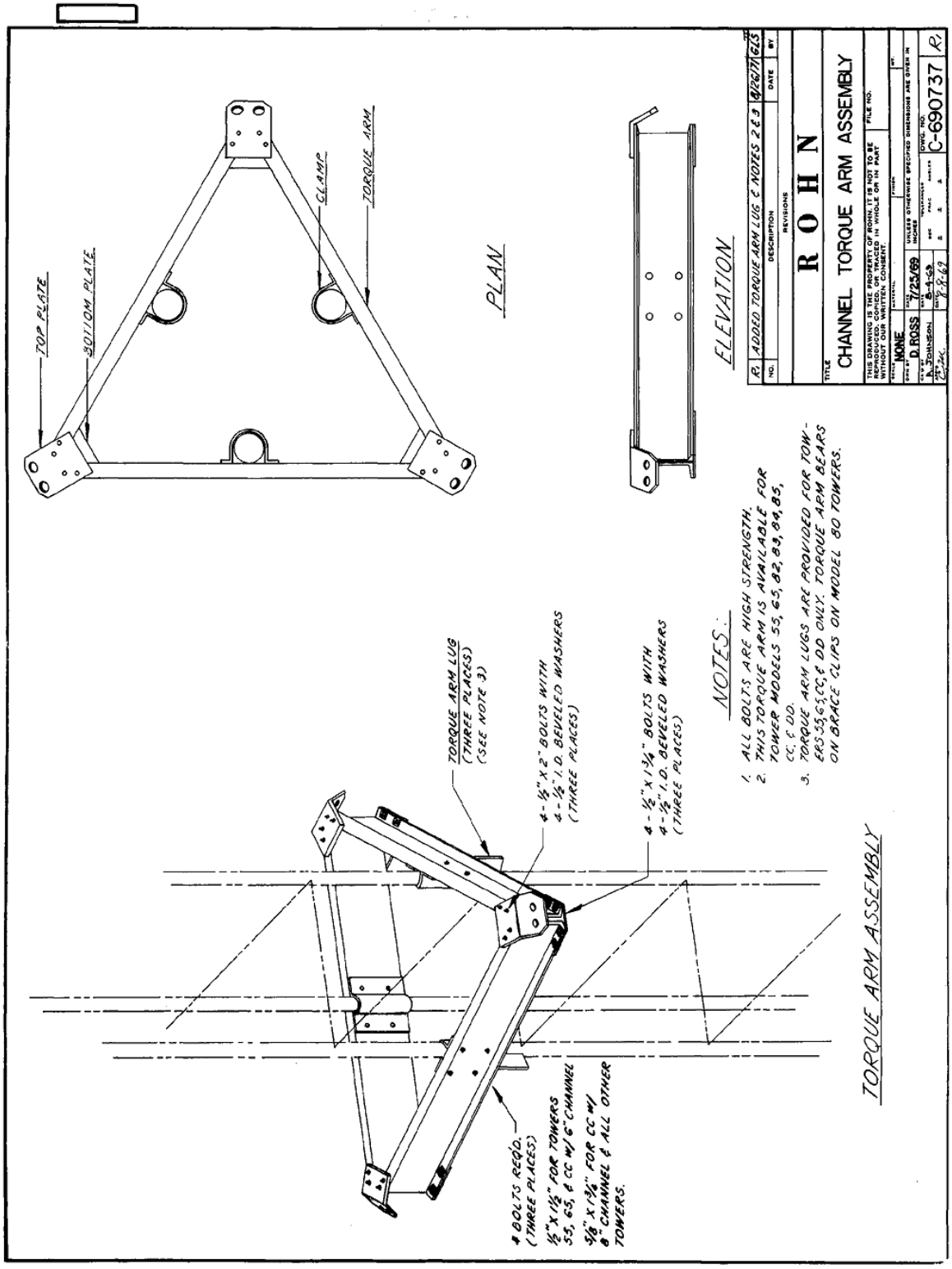
TOP PLATE
BOTTOM PLATE
CLAMP
TORQUE ARM
PLAN
ELEVATION
R. ADDED TORQUE ARM LUG & NOTES 2 & 3 9/26/71 GLS
NO. DESCRIPTION DATE BY
REVISIONS
ROHN
TITLE
CHANNEL TORQUE ARM ASSEMBLY
THIS DRAWING IS THE PROPERTY OF ROHN. IT IS NOT TO BE REPRODUCED OR COPIED IN WHOLE OR IN PART WITHOUT OUR WRITTEN CONSENT.
FILE NO.
SCALE NONE
DRN BY D. ROSS
DATE 7/25/69
UNLESS OTHERWISE SPECIFIED DIMENSIONS ARE GIVEN IN INCHES
DWG. NO. C-690737
R.
TORQUE ARM LUG (THREE PLACES) (SEE NOTE 3)
4 - 1/2" X 2" BOLTS WITH 4 - 1/2" I.D. BEVELED WASHERS (THREE PLACES)
4 - 1/2" X 1 3/4" BOLTS WITH 4 - 1/2" I.D. BEVELED WASHERS (THREE PLACES)
NOTES:
1. ALL BOLTS ARE HIGH STRENGTH.
2. THIS TORQUE ARM IS AVAILABLE FOR TOWER MODELS 55, 65, 82, 83, 84, 85, CC, & DD.
3. TORQUE ARM LUGS ARE PROVIDED FOR TOWERS 55, 65, CC, & DD ONLY. TORQUE ARM BEARS ON BRACE CLIPS ON MODEL 80 TOWERS.
4 BOLTS REQ'D. (THREE PLACES)
1/2" X 1 1/2" FOR TOWERS 55, 65, & CC W/ 6" CHANNEL
5/8" X 1 3/4" FOR CC W/ 8" CHANNEL & ALL OTHER TOWERS.
TORQUE ARM ASSEMBLY
PRINTED IN U.S.A.

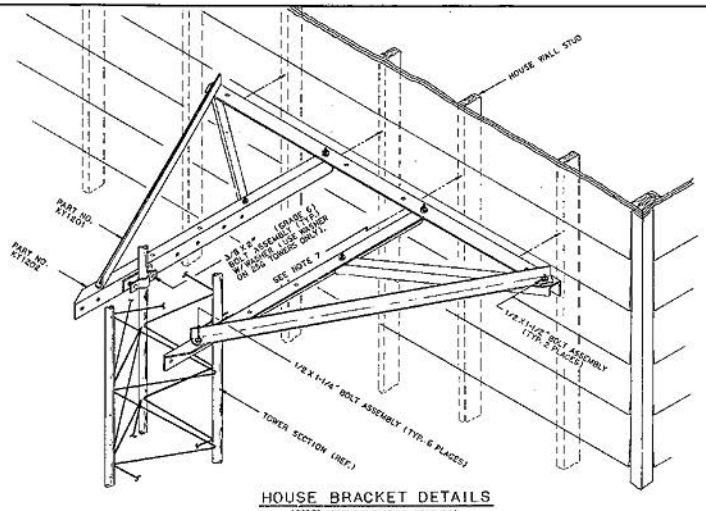

HOUSE BRACKET DETAILS

(ORDER ASSEMBLY PART NO. HBUTVRO)

ROOF MOUNTING KIT — HBRMKTVRO

BILL OF MATERIALS

ITEM	QUAN.	PART NO.	DESCRIPTION	DRAWING NO.
1	6	KY1206	MOUNTING CLIP ANGLE	B850403
2	8	2100289GA	5/8 X 1-1/2" BOLT ASSEMBLY	C770404
3				
4				
5				

HOUSE BRACKET ASSEMBLY — HBUTVRO

BILL OF MATERIALS

ITEM	QUAN.	PART NO.	DESCRIPTION	DRAWING NO.
1	2	KY1201	DIAGONAL SUPPORT ANGLE	B850392
2	1	KY1202	TOWER MOUNTING ANGLE	C850523
3	1	KY1203	TOWER MOUNTING ANGLE	C850523
4	2	KY1204	SHIM PLATE (FOR 456 TOWERS ONLY)	B850395
5	1	KY1205	HOUSE ATTACHMENT ANGLE	C850525
6	2	D114	SADDLE CLAMP	B770214
7	4	2100099GAW	3/8 X 2" BOLT ASSEMBLY (GRADE 5) W/WASHER	C770404
8	2	2100418GA	1/2 X 1-1/2" BOLT ASSEMBLY	C770404
9	2	KY1207	DIAGONAL SUPPORT ANGLE	B850404
10	6	2100175GA	1/2 X 1-1/4 BOLT ASSEMBLY	C770404
11				
12				

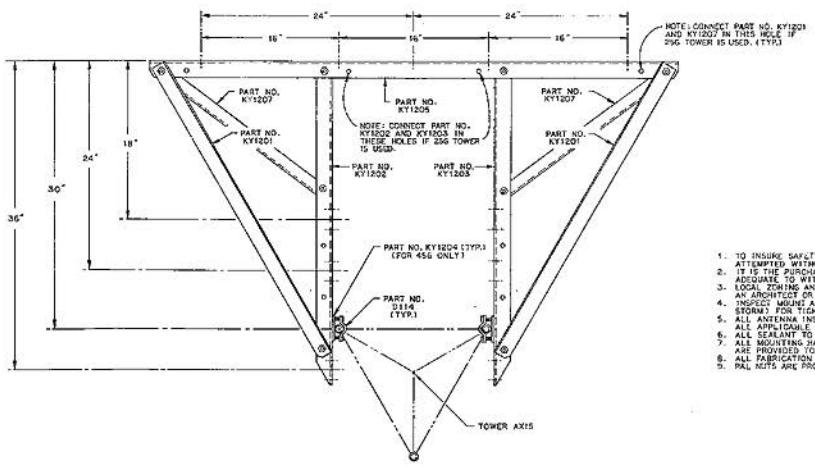

PLAN VIEW

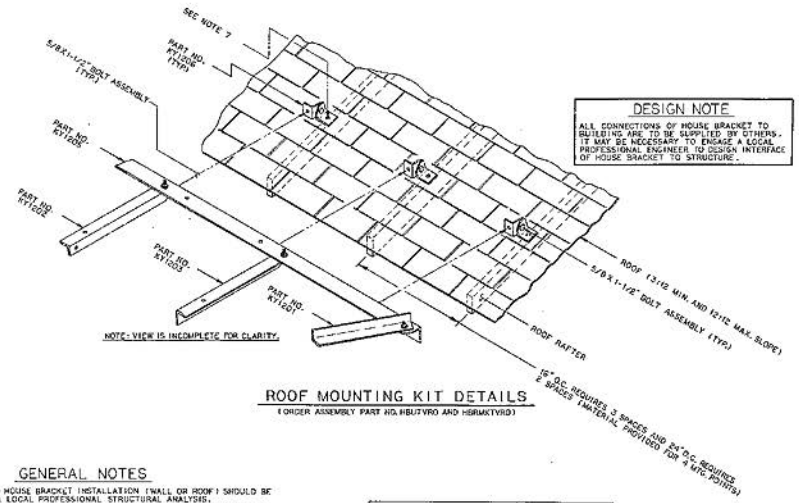

NOTE: VIEW IS INCOMPLETE FOR CLARITY.

ROOF MOUNTING KIT DETAILS

(ORDER ASSEMBLY PART NO. HBUTVRO AND HBRMKTVRO)

DESIGN NOTE

ALL CONNECTIONS OF HOUSE BRACKET TO BUILDING ARE TO BE SUPPLIED BY OTHERS. IT MAY BE NECESSARY TO ENGAGE A LOCAL PROFESSIONAL ENGINEER TO DESIGN INTERFACE OF HOUSE BRACKET TO STRUCTURE.

GENERAL NOTES

1. TO INSURE SAFETY, NO HOUSE BRACKET INSTALLATION (WALL OR ROOF) SHOULD BE ATTEMPTED WITHOUT A LOCAL PROFESSIONAL STRUCTURAL ANALYSIS.
2. IT IS THE PURCHASER'S RESPONSIBILITY TO VERIFY THAT HIS INSTALLATION IS ADEQUATE TO WITHSTAND ALL LOADS IMPOSED BY HIS MOUNT AND ANTENNA.
3. LOCAL ZONING AND/OR BUILDING CODES AND INSURANCE COMPANIES MAY REQUIRE AN ARCHITECT OR STRUCTURAL ENGINEER APPROVAL PRIOR TO INSTALLATION.
4. INSPECT MOUNT AND ANTENNA INSTALLATION EVERY 6 MONTHS (OR AFTER EVERY STORM) FOR TIGHTNESS.
5. ALL ANTENNA INSTALLATION SHOULD BE GROUNDED, BY THE INSTALLER, TO MEET ALL APPLICABLE CODES.
6. ALL SEALANT TO BE SUPPLIED BY OTHERS.
7. ALL MOUNTING HARDWARE TO BE SUPPLIED BY OTHERS. (5) 11/16" DIAMETER HOLES ARE PROVIDED TO ACCOMODATE STUD SPACING OF 16", OR 24".
8. ALL FABRICATION DRAWINGS REFERENCED, ARE FOR SHOP USE ONLY.
9. PAL NUTS ARE PROVIDED WITH ALL BOLT ASSEMBLIES.

NOTE: ASSEMBLIES SHOWN ON THIS DRAWING DO NOT INCLUDE TOWER OR DISH MOUNT, WHICH MUST BE ORDERED SEPARATELY.

No. ▲ Revision Description ▲ Date ▲ By

TOWER TYPE

UNR-Rohn
Division of UNR, Inc.

Title: TVRO HOUSE BRACKET ASSEMBLY
(FOR 256, 456 & 556 TOWERS)

Scale: NONE

Drawn by: GPW Date: 03-22-85

Checked by: Date: 4/16/85

Approved by Engineering: Date: 4/16/85

Approved by Production: Date:

Approved by Sales: Date: 4-25-85

Drawing Number: D850221

IMPORTANT INSTALLATION NOTES FOR THE 25G WALL MOUNT STRUCTURE

1. IT IS THE PURCHASERS RESPONSIBILITY TO VERIFY THAT HIS INSTALLATION AND BUILDING STRUCTURE ARE ABLE TO WIDTHSTAND ALL LOADS IMPOSED BY HIS ANTENNA SYSTEM AND MOUNT.
2. ANTENNA INSTALLATION SHOULD BE GROUNDED BY THE INSTALLER TO MEET ALL APPLICABLE CODES.
3. PAL NUTS ARE INCLUDED WITH THE BOLT ASSEMBLIES AND ARE TO BE INSTALLED WITH THE CONCAVE SURFACE AGAINST THE NUT.
4. ALL PARTS ARE HOT DIP GALVANIZED AFTER FABRICATION.
5. ALL SEALANT, IF REQUIRED, TO BE SUPPLIED BY OTHERS.
6. LOCAL ZONING AND OR BUILDING CODES AND INSURANCE COMPANIES MAY REQUIRE AN ARCHITECT OR STRUCTURAL ENGINEER APPROVAL PRIOR TO INSTALLATION.
7. INSPECT MOUNT AND ANTENNA INSTALLATION EVERY 6 MONTHS OR AFTER EVERY STORM FOR TIGHTNESS.
8. REFER TO ROHN DRAWING #A8713028I FOR ALLOWABLE ANTENNA AND TOWER HEIGHT.
9. HOLES PROVIDED IN MOUNTING ANGLES ARE 11/16" DIAMETER FOR USE WITH HDG 5/8" THREADED ROD, PROVIDED BY OTHERS.

BILL OF MATERIALS

ITEM	QTY	PART NO	DESCRIPTION	DWG NO
1	4	230005	NUT 3/8 HVY HEX HDG	PURCHASED
2	4	230007	NUT 3/8 PAL HDG	PURCHASED
3	24	230011	NUT 1/2 PAL HDG	PURCHASED
4	24	240085	NUT 1/2 HEX HDG	PURCHASED
5	4	210009G	BOLT 3/8 x 2 HCS G5 GDG	PURCHASED
6	24	210017G	BOLT 1/2 x 1-1/4 HSB A325 HDG	PURCHASED
7	5	250008G	WASHER 3/8 SAE FLAT HDG	PURCHASED
8	2	D114	CLAMP SADDLE 0.25" 3.5" C TO C HDG	B770214
9	2	HB20100	ANGLE 24.774" x 1.5" x 0.125"	A990167
10	2	KH6772	ANGLE 2" x 2" x 0.13"	A990130
11	4	KH6773	ANGLE HOUSE BRKT 33.5" x 2" x 0.13"	B990916
12	1	KH6775	BASE PLATE FOR 25G WALL MOUNT	C990120
13	6	KY1201	ANGLE HOUSE BRKT 38.25"x 1.5" x 0.13"	B850392
14	3	KY1205	ANGLE HOUSE BRKT 59.5" x 2" x 0.13"	C850525

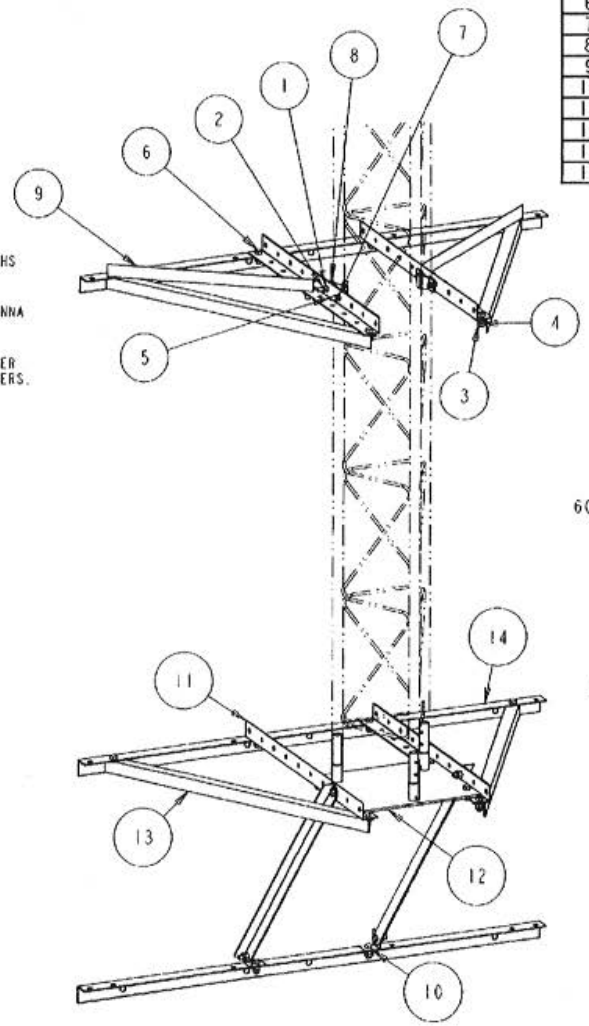

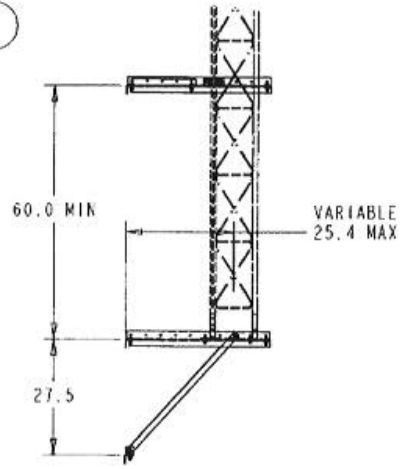

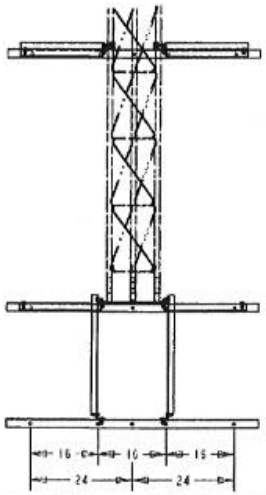

DESCRIPTION
25G WALL MOUNT
PART NUMBER 25GWM

ALL DIMENSIONS ARE GIVEN IN INCHES. TOLERANCES ARE AS GIVEN BELOW UNLESS NOTED OTHERWISE.
DECIMAL: ±0.063" ANGLES: ±2°

MATERIAL DESCRIPTION | SAP MATERIAL PART NO.
SCALE SIZE | FINISH: HDG | WEIGHT

ROHN Products, Inc.

DATE 7/20/99 | DRAWN BY DJL
CHECKED BY | APPROVED DL 2-5-00
SCALE 0.05 | DR. FILE NO. EF4424
SIZE C | PART NO. 25GWM | DWG NO. C990121 | REV 0

ROHN™ Products

G Series Bracketed Towers

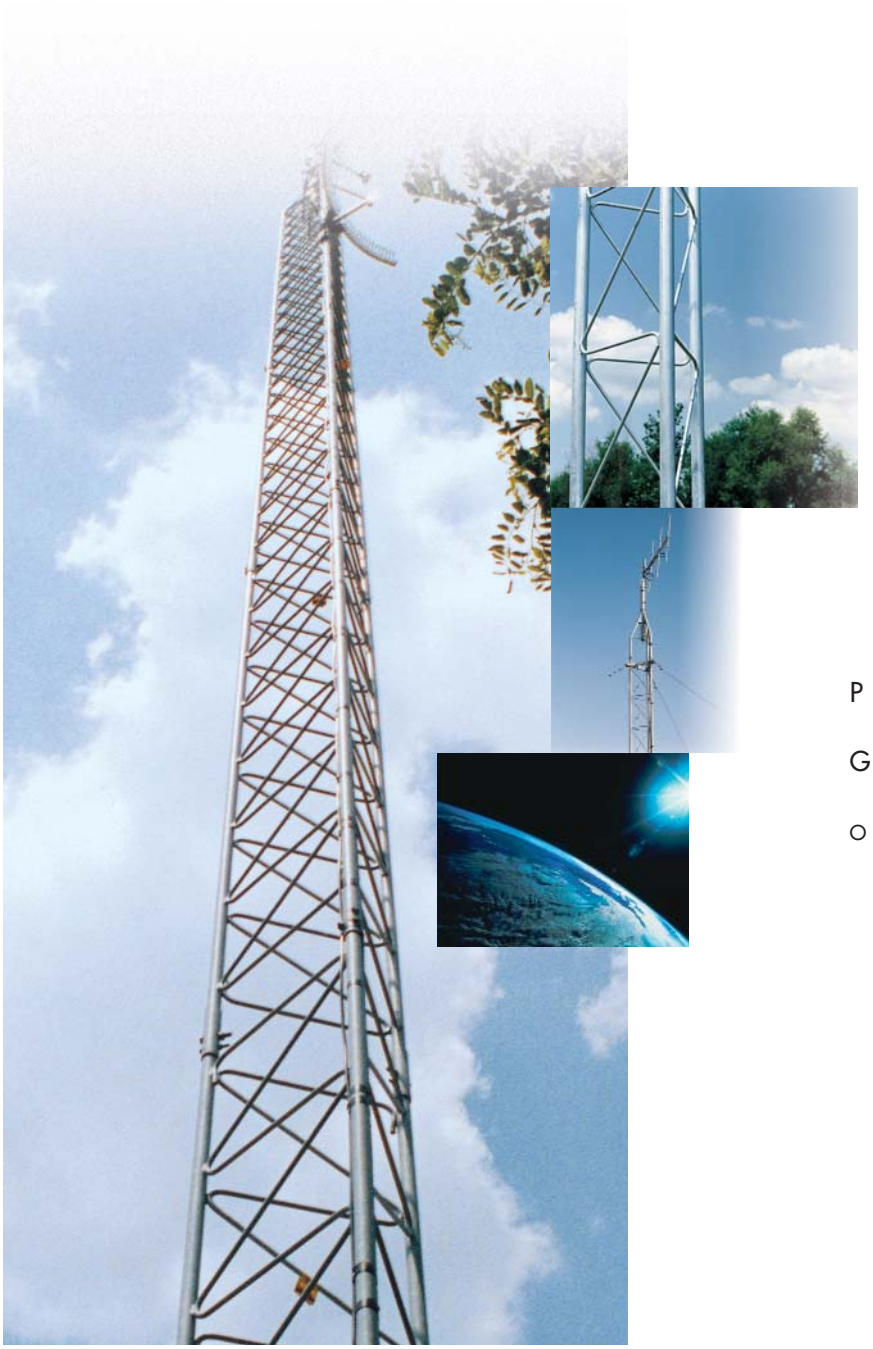

Products for a Growing World of Technology

Blank

March 1, 1989

Sheet D-2530
(Replaces D-2445)

REFERENCE SHEET AND ASSEMBLY INFORMATION
G SERIES BRACKETED TOWERS, NON-GUYED
(See Rohn Catalog for Guyed Tower Information)

INSTALLATION: Select a tower location sufficiently clear and out of falling distance of power lines since every electrical and telephone wire should be considered dangerous. The only safe distance from power lines is at least twice the height of tower, mast and antenna combined. Tower should be installed and dismantled by experienced and trained personnel. All antenna installations must be grounded per local or national codes.

BASE: See Drawing No. A880445 for the size of the hole for concrete placement. (Note: For cases of loose soil, etc., the hole must be larger.) Spread about 2″ to 6″ of gravel in bottom of hole prior to setting short base or tower section. After setting short base or tower section on gravel, fill another 3″ with gravel around the tower legs. This allows the tower legs to extend the required amount below the bottom of the concrete, thus allowing for drainage of moisture into the gravel. The first 10′ section should be leveled, plumbed, and temporarily guyed or braced while pouring the concrete. This will insure a plumb tower after installation. Check tower to assure it is plumb and level after pouring concrete. Do not pull tower up into the concrete to level it and do not drive it hard into ground as this plugs leg holes and prevents moisture drainage. Crown the top of the concrete slightly to prevent water accumulation. Do not use drive rods as a base for tower when set in concrete.

HEIGHT OF TOWER & BRACKET USES: See Drawing No. A880496 for specific information on tower heights and placement of house brackets on #45 bracketed towers. (Note: Tighten the house bracket U-bolts only enough to prevent looseness. Do not dent or flatten the tower upright members by excessively tightening U-bolts.)

BOLTS: Installers are urged to use a 10″ lining-up punch that tapers about 1/2″ to 5/32″ diameter over a 6-1/2″ length. If bolts cannot be pushed through the holes with the heel of the hand while rocking the tower, do not hammer them through. Carefully drive the punch into the hole just enough to slightly enlarge it. The leg bolt hole should be just large enough to admit the bolt. Never drill out the holes. Be sure to tighten all leg bolts until they partially flatten the sleeves, causing the sleeves to actually grip the legs inside. Always replace stripped bolts. Upon completing an installation, there should be no vertical movement between tower sections at the joints when the tower is deliberately swayed from side to side.

MISCELLANEOUS: Installation is greatly hastened and simplified by the use of an erection fixture. Do not use it to lift more than the weight of one tower section or any part of a section at one time. Erection fixtures are not intended to be used for lifting individuals. Anti-climb sections are recommended on all towers to prevent unauthorized persons from climbing tower.

CAUTION …Be sure hinge bolts on hinged type accessories are loosened before attempting to hinge tower up or down. Hinge no more than 40′ of #45 tower only. All hinged type bases are recommended to be used to raise tower only without antenna. When raising and lowering tower on any type of hinge base or hinge section, the loads applied for hinging the tower must be applied equally on both sides of tower in order to reduce the possibility of twist on tower and hinges at the base. Special care must be taken to avoid the use of raising and lowering methods which may cause damage to tower or hinges. Hinged bases should only be installed and dismantled by professional and experienced installers.

See Drawing No. A871266 for more information on non-guyed towers.

Our catalog information excludes roof installations. Local engineers must be consulted to determine adequate base and anchor details and windload criteria for all roof type installations.

Note: All types of antenna installations should be thoroughly inspected by qualified personnel at least twice a year and remarked with hazard and warning labels to insure safety and proper performance. A safety package (part number ACWS) is available which includes one anti-climb warning sign and two Danger - Watch for Wires labels along with other printed safety information.

Dismantling of any tower should be done by professional and experienced installers a section at a time with the use of an erection fixture. Temporary steel guys may be necessary at the 10′ level.

Part Number	
BRKT040	40′ Complete Bracketed Tower
BRKT050	50′ Complete Bracketed Tower
BRKT060	60′ Complete Bracketed Tower
BRKT070	70′ Complete Bracketed Tower
BRKT080	80′ Complete Bracketed Tower
BRKT090	90′ Complete Bracketed Tower
BRKT100	100′ Complete Bracketed Tower

Refer to alphabetical/numerical price list for Prices on Complete Bracketed Towers.
Specifications subject to change without notice.

ROHN
NO. 25G BRACKETED TOWERS - NO ICE

TOWER HEIGHT FT	BRACKET ELEVATION		ALLOWABLE ANTENNA AREAS (SQ.FT.)		
	UPPER (FT)	LOWER (FT)	70 MPH	80 MPH	90 MPH
40	30.0	15.0	15.3	11.3	7.7
50	36.0	18.0	14.6	10.0	6.8
60	46.0	23.0	14.0	8.9	5.9
70	56.0	28.0	13.5	8.3	5.5
80	66.0	33.0	13.1	7.7	5.0
90	66.0	33.0	6.8	4.9	---
100	66.0	33.0	1.7	---	---

1. TOWER DESIGNS ARE IN ACCORDANCE WITH APPROVED NATIONAL STANDARD ANSI/EIA-222-E.
2. ALL TOWERS MUST HAVE "FIXED BASES". PINNED BASES MUST NOT BE USED.
3. DESIGNS ASSUME ONE 5/8" TRANSMISSION LINE ON EACH FACE, (TOTAL =3), SYMMETRICALLY PLACED.
4. ANTENNAS AND MOUNTS ASSUMED SYMMETRICALLY PLACED AT TOWER APEX.
5. ALLOWABLE ANTENNA AREAS ASSUME ALL ROUND ANTENNA MEMBERS.
6. ALLOWABLE FLAT-PLATE ANTENNA AREAS, BASED ON EIA RS-222-C, MAY BE OBTAINED BY MULTIPLYING AREAS SHOWN BY 0.6.
7. DO NOT INSTALL OR DISMANTLE TOWERS WITHIN FALLING DISTANCE OF ELECTRICAL AND/OR TELEPHONE LINES.
8. TOWER ERECTION AND DISMANTLING MUST BE BY QUALIFIED AND EXPERIENCED PERSONNEL.
9. INSTALL WARNING PLATE (P/N ACWS) IN A HIGHLY VISIBLE LOCATION.
10. ALL ANTENNA INSTALLATIONS MUST BE GROUNDED IN ACCORDANCE WITH LOCAL AND NATIONAL CODES.
11. FOR FOUNDATION DETAILS SEE DRAWING A871298.
12. ALL BRACKETS ARE TO BE ROHN P/N HBUTVRO PER DRAWING D850221.
13. THE INTERFACE OF TOWER BRACKETS TO SUPPORTING STRUCTURE IS TO BE DESIGNED "BY OTHERS" AND MUST SUPPORT A MINIMUM HORIZONTAL FORCE OF 815 POUNDS.

BY: RAM DATE: 3/17/88 CHECKED: AED DATE: 3/17/88 DWG. NO. A871302R1

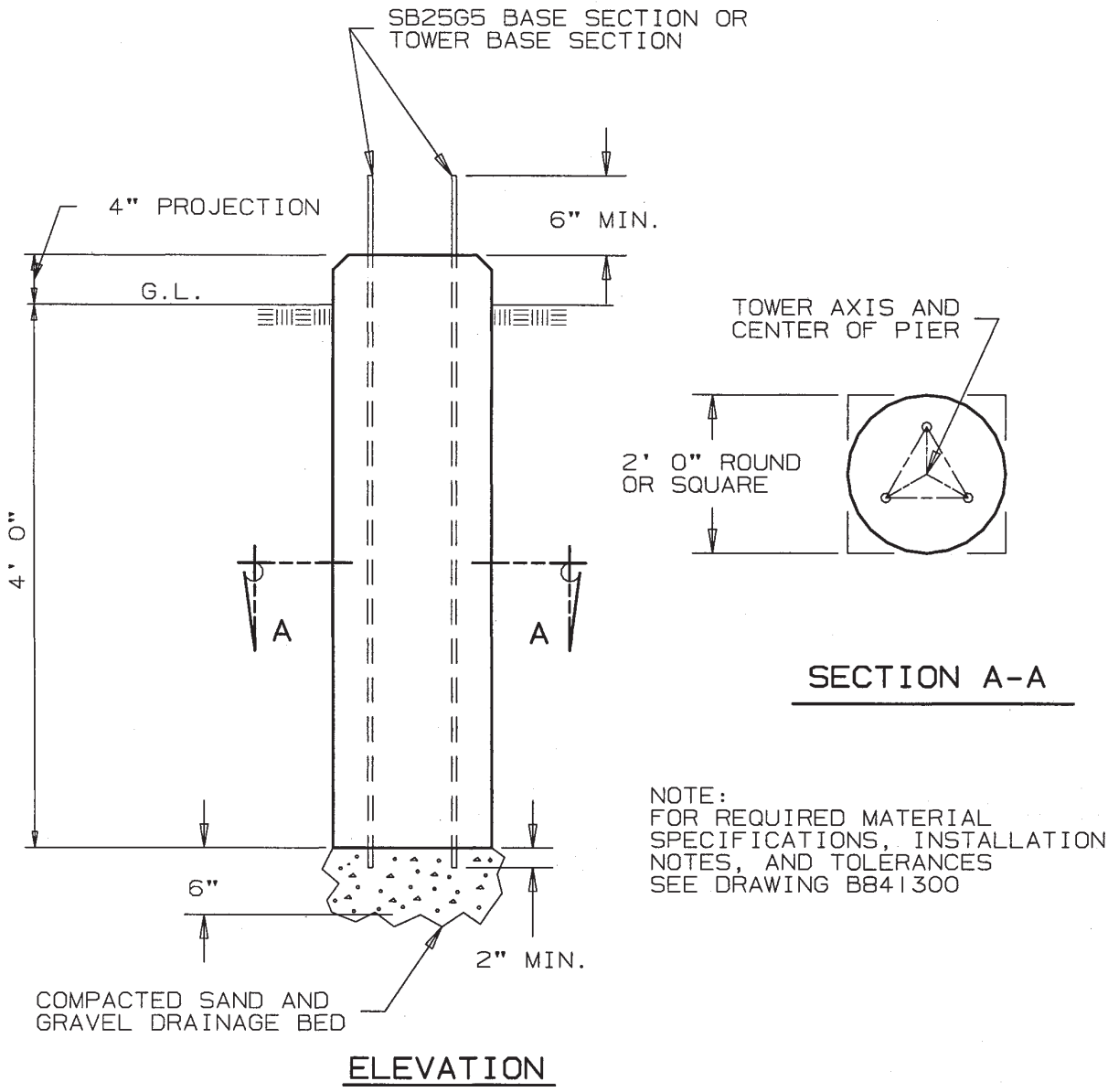

ELEVATION

MAX. REACTIONS

MOMENT = 1,563 FOOT POUNDS
SHEAR = 211 POUNDS
VERTICAL = 600 POUNDS

VOLUME OF CONCRETE

SQUARE PIER =.7 CU. YDS.
ROUND PIER =.5 CU. YDS.

R1	REV. FND FOR NORMAL SOIL	2/27/96	CSR	WMN	XK

DRAWN BY: WDU	DATE: 9/16/87	ROHN
CHECKED BY: WRF	DATE: 9/29/87	TITLE: DRILLED PIER FOUNDATION DETAIL FOR NORMAL SOIL PER ANSI/EIA-222-E FOR BRACKETED 25 TOWER
APP'D. ENG: XK	DATE: 2/12/88	
APP'D. SALES: AE	DATE: 2/12/88	
FILE NUMBER:		
DRAWING NUMBER: A871298R1		

ROHN

NO. 45G BRACKETED TOWERS - NO ICE

TOWER HEIGHT (FT)	BRACKET ELEVATION		ALLOWABLE ANTENNA AREAS (SQ.FT.)		
	UPPER (FT)	LOWER (FT)	70 MPH	80 MPH	90 MPH
40	30.0	15.0	36.7	27.4	21.0
50	36.0	18.0	34.8	25.9	20.0
60	46.0	23.0	33.3	24.7	19.0
70	56.0	28.0	32.0	23.8	17.0
80	66.0	33.0	31.0	23.0	12.0
90	66.0	33.0	13.8	9.3	5.3
100	66.0	33.0	5.5	2.0	---

1. TOWER DESIGNS ARE IN ACCORDANCE WITH APPROVED NATIONAL STANDARD ANSI/EIA-222-E.
2. ALL TOWERS MUST HAVE "FIXED BASES". PINNED BASES MUST NOT BE USED.
3. DESIGNS ASSUME ONE 1/2" & ONE 7/8" TRANSMISSION LINE ON EACH FACE, (TOTAL=6), SYMMETRICALLY PLACED.
4. ANTENNAS AND MOUNTS ASSUMED SYMMETRICALLY PLACED AT TOWER APEX.
5. ALLOWABLE ANTENNA AREAS ASSUME ALL ROUND ANTENNA MEMBERS.
6. ALLOWABLE FLAT-PLATE AREAS, BASED ON EIA RS-222-C, MAY BE OBTAINED BY MULTIPLYING AREAS SHOWN BY 0.6.
7. DO NOT INSTALL OR DISMANTLE TOWERS WITHIN FALLING DISTANCE OF ELECTRICAL AND/OR TELEPHONE LINES.
8. TOWER ERECTION AND DISMANTLING MUST BE BY QUALIFIED AND EXPERIENCED PERSONNEL.
9. INSTALL WARNING PLATE (P/N ACWS) IN A HIGHLY VISIBLE LOCATION.
10. ALL ANTENNA INSTALLATIONS MUST BE GROUNDED IN ACCORDANCE WITH LOCAL AND NATIONAL CODES.
11. FOR FOUNDATION DETAILS SEE DRAWING A880445.
12. ALL BRACKETS ARE TO BE ROHN P/N HBUTVRO PER DRAWING D850221.
13. THE INTERFACE OF TOWER BRACKETS TO SUPPORTING STRUCTURE IS TO BE DESIGNED "BY OTHERS" AND MUST SUPPORT A MINIMUM HORIZONTAL FORCE OF 1810 POUNDS.

BY: RAM DATE: 3/17/88 CHECKED: AED DWG.NO. A880496R2

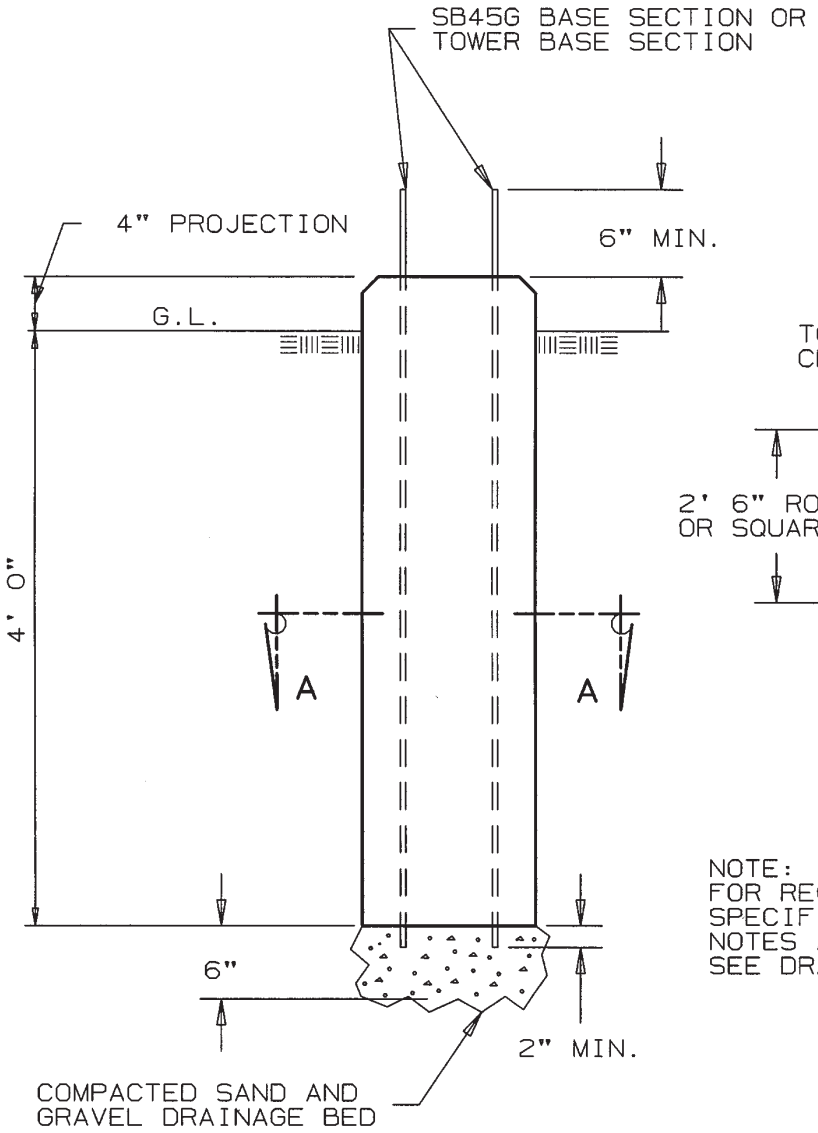

ELEVATION

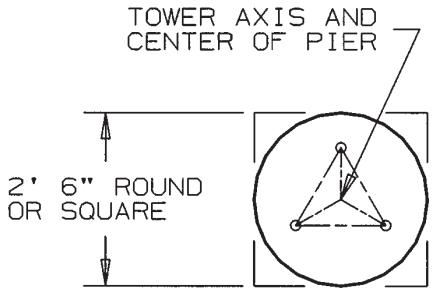

SECTION A-A

NOTE:
FOR REQUIRED MATERIAL SPECIFICATIONS, INSTALLATION NOTES AND TOLERANCES SEE DRAWING B841300

MAX. REACTIONS

MOMENT = 2,502 FOOT POUNDS
SHEAR = 389 POUNDS
VERTICAL = 1000 POUNDS

VOLUME OF CONCRETE

SQUARE PIER = 1.0 CU. YDS.
ROUND PIER = 0.8 CU. YDS.

R1	REVISED FOUNDATION FOR NORMAL SOIL	2/27/96	CSR	WMN	XK

DRAWN BY: GPW	DATE: 02/19/88	ROHN
CHECKED BY: WDU	DATE: 2/23/88	TITLE: DRILLED PIER FOUNDATION FOR NORMAL SOIL PER ANSI/EIA-222-E FOR BRACKETED 45 TOWER
APP'D. ENG: XK	DATE: 2/24/88	
APP'D. SALES: RAK	DATE: 3/17/88	
FILE NUMBER:		
DRAWING NUMBER: A880445R1		

ROHN

NO. 55G BRACKETED TOWERS – NO ICE

TOWER HEIGHT FT	BRACKET ELEVATION		ALLOWABLE ANTENNA AREAS (SQ. FT.)		
	UPPER FT	LOWER FT	70 MPH	80 MPH	90 MPH
40	30.0	15.0	72.4	54.5	41.8
50	36.0	18.0	68.7	51.7	39.4
60	46.0	23.0	65.8	49.5	37.6
70	56.0	28.0	63.5	47.5	36.0
80	66.0	33.0	61.4	46.0	34.6
90	66.0	33.0	30.6	22.0	16.0
100	66.0	33.0	16.0	10.5	6.4

1. TOWER DESIGNS ARE IN ACCORDANCE WITH APPROVED NATIONAL STANDARD ANSI/EIA-222-E.
2. ALL TOWERS MUST HAVE "FIXED BASES". PINNED BASES MUST NOT BE USED.
3. DESIGNS ASSUME TWO 7/8" TRANSMISSION LINES ON EACH FACE, (TOTAL = 6), SYMMETRICALLY PLACED.
4. ANTENNAS AND MOUNTS ASSUMED SYMMETRICALLY PLACED AT TOWER APEX.
5. ALLOWABLE ANTENNA AREAS ASSUME ALL ROUND ANTENNA MEMBERS.
6. ALLOWABLE FLAT-PLATE ANTENNA AREAS, BASED ON EIA RS-222-C, MAY BE OBTAINED BY MULTIPLYING AREAS SHOWN BY 0.6
7. DO NOT INSTALL OR DISMANTLE TOWERS WITHIN FALLING DISTANCE OF ELECTRICAL AND/OR TELEPHONE LINES.
8. TOWER ERECTION AND DISMANTLING MUST BE BY QUALIFIED AND EXPERIENCED PERSONNEL.
9. INSTALL WARNING PLATE (P/N ACWS) IN A HIGHLY VISIBLE LOCATION.
10. ALL ANTENNA INSTALLATIONS MUST BE GROUNDED IN ACCORDANCE WITH LOCAL AND NATIONAL CODES.
11. FOR FOUNDATION DETAILS SEE DRAWING A880446.
12. ALL BRACKETS ARE TO BE ROHN P/N HBUTVRO PER DRAWING D850221.
13. THE INTERFACE OF TOWER BRACKETS TO SUPPORTING STRUCTURE IS TO BE DESIGNED "BY OTHERS" AND MUST SUPPORT A MINIMUM HORIZONTAL FORCE OF 3200 POUNDS.

BY: RAM DATE: 3/17/88 CHECKED: ASD DATE: 3/17/88 DWG. NO. A880497R1

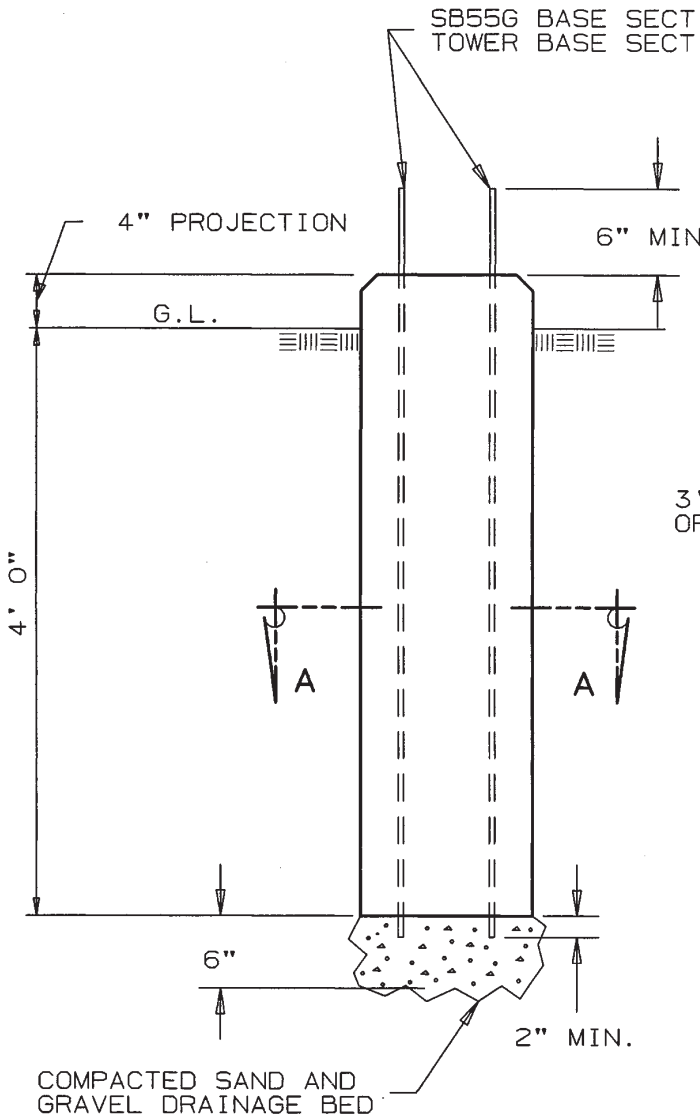

ELEVATION

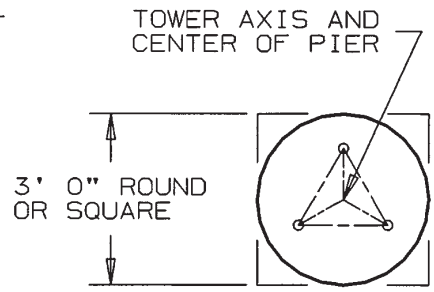

SECTION A-A

NOTE:
FOR REQUIRED MATERIAL SPECIFICATIONS, INSTALLATION NOTES AND TOLERANCES SEE DRAWING B841300

MAX. REACTIONS

MOMENT = 4,180 FOOT POUNDS
SHEAR = 634 POUNDS
VERTICAL = 1340 POUNDS

VOLUME OF CONCRETE

SQUARE PIER = 1.4 CU. YDS.
ROUND PIER = 1.1 CU. YDS.

R1	REVISED FOUNDATION FOR NORMAL SOIL	2/27/96	CSR	WMN	XK

DRAWN BY: GPW	DATE: 02/19/88	ROHN
CHECKED BY: WDU	DATE: 2/23/88	TITLE: DRILLED PIER FOUNDATION FOR NORMAL SOIL PER ANSI/EIA-222-E FOR BRACKETED 55 TOWER
APP'D. ENG: XK	DATE: 2/24/88	
APP'D. SALES: RAK	DATE: 3/17/88	
FILE NUMBER:		
DRAWING NUMBER: A880446R1		

Blank

ROHN™ Products

G Series Self Support Towers

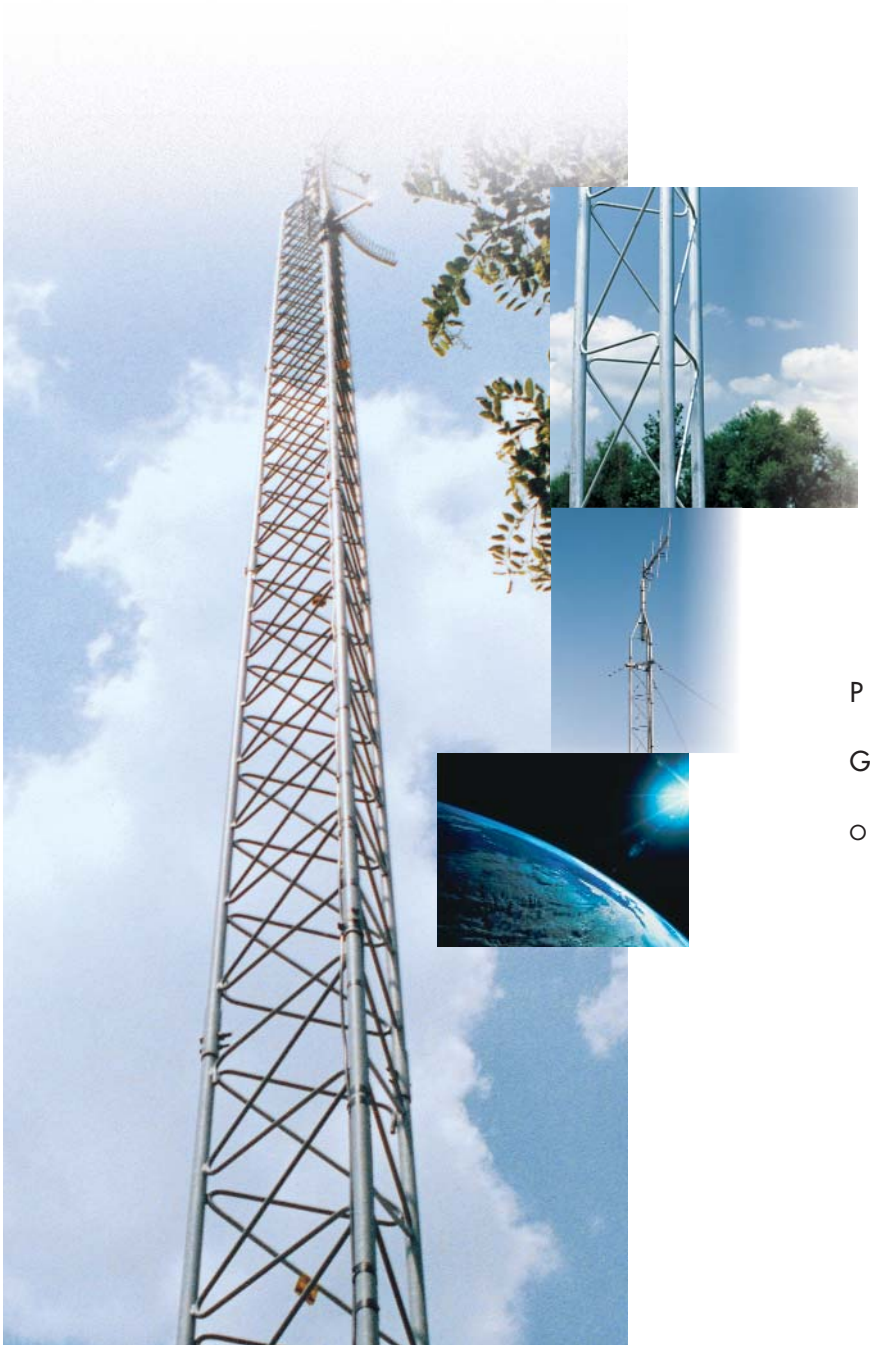

Products for a Growing World of Technology

Blank

ROHN®

SELF-SUPPORTING TOWERS – ALLOWABLE ANTENNA AREAS (SQ. FT.)

	70 MPH								80 MPH								90 MPH							
	NO ICE				1/2" ICE (NOTE 7)				NO ICE				1/2" ICE (NOTE 7)				NO ICE				1/2" ICE (NOTE 7)			
HT.	#25	#45	#55	#65	#25	#45	#55	#65	#25	#45	#55	#65	#25	#45	#55	#65	#25	#45	#55	#65	#25	#45	#55	#65
10'	19.7	42.5	75.0	175.9	22.8	55.0	99.0	231.4	14.3	30.0	57.0	133.0	15.5	40.0	74.0	174.3	10.5	25.0	45.0	103.6	10.5	30.0	57.0	135.0
20'	14.2	22.0	43.0	117.0	14.4	25.0	52.0	150.0	9.0	16.0	30.0	85.0	7.1	16.0	35.0	105.0	6.9	11.0	23.0	65.0	2.1	10.0	26.0	85.0
30'	6.4	12.0	26.0	76.2	2.5	9.0	27.0	95.0	3.7	7.5	17.0	55.8	0.0	2.7	16.0	65.0	1.7	4.0	12.0	40.0	0.0	0.0	9.0	49.0
35'	3.6	8.7	21.9	61.2	0.0	4.7	22.2	76.4	1.4	4.7	14.5	44.0	0.0	0.0	12.4	53.4		1.9	9.4	32.2		0.0	5.7	37.7
40'	1.5	5.1	15.0	48.8	0.0	0.0	8.0	59.1		1.4	8.0	34.1		0.0	2.5	39.0			4.0	24.1			0.0	25.0
45'		2.3	11.4	39.0			5.5	45.7			5.9	26.2			0.0	28.8			2.2	17.7			0.0	17.2
50'			6.5	29.3			0.0	33.5			1.5	19.7			0.0	19.1				14.5				8.0
55'			4.0	24.4			0.0	25.0				14.5				11.4				7.7				2.6
60'			0.8	18.4			0.0	16.0				9.4				4.1				3.3				0.0
70'				8.7				1.9				1.3				0.0								
80'				0.9				0.0																

1. TOWER DESIGNS ARE IN ACCORDANCE WITH APPROVED NATIONAL STANDARD ANSI/EIA-222-E.
2. ALL TOWERS MUST HAVE "FIXED" BASES. PINNED BASES MUST NOT BE USED.
3. DESIGNS ASSUME TRANSMISSION LINES SYMMETRICALLY PLACED AS FOLLOWS:
   #25 TOWER - ONE 5/8" LINE ON EACH FACE (TOTAL = 3).
   #45 TOWER - ONE 7/8" AND ONE 1/2" LINE ON EACH FACE (TOTAL = 3 @ 7/8" & 3 @ 1/2").
   #55 & #65 - TWO 7/8" LINES ON EACH FACE (TOTAL = 6).
4. ANTENNAS AND MOUNTS ASSUMED SYMMETRICALLY PLACED AT TOWER APEX.
5. ALLOWABLE ANTENNA AREAS ASSUME ALL ROUND ANTENNA MEMBERS.
6. ALLOWABLE FLAT-PLATE ANTENNA AREAS, BASED ON EIA RS-222-C, MAY BE OBTAINED BY MULTIPLYING AREAS SHOWN BY 0.6.
7. FOR WIND SPEEDS WITH ICE, THE AREAS SHOWN INCLUDE 1/2" RADIAL ICE. ANTENNA AREAS WITHOUT ICE MUST NOT EXCEED THE AREAS SHOWN FOR THE NO ICE CONDITION.
8. DO NOT INSTALL OR DISMANTLE TOWERS WITHIN FALLING DISTANCE OF ELECTRICAL AND/OR TELEPHONE LINES.
9. TOWER ERECTION AND DISMANTLING MUST BE BY QUALIFIED AND EXPERIENCED PERSONNEL.
10. INSTALL WARNING PLATE (P/N ACWS) IN A HIGHLY VISIBLE LOCATION.
11. ALL ANTENNA INSTALLATIONS MUST BE GROUNDED IN ACCORDANCE WITH LOCAL AND NATIONAL CODES.
12. FOR FOUNDATION DETAILS SEE DRAWING B870725.

BY: R.A.M. DATE: 9/24/87 CHECKED: aed DATE: 9-24-87 DWG. NO. A871266R1

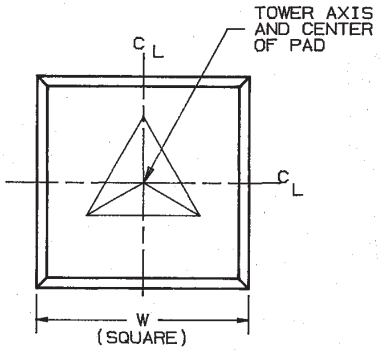

PLAN VIEW

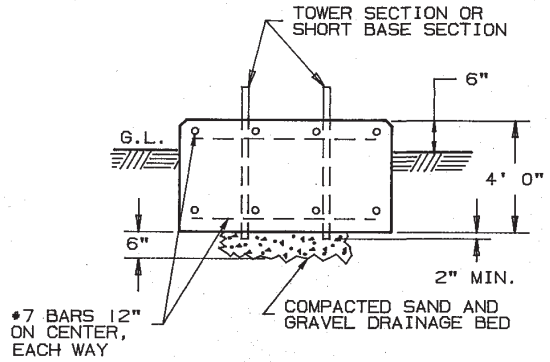

ELEVATION VIEW

TOWER NO.	OVER-TURNING MOMENT FOOT POUNDS	MAX. ALLOW. SHEAR POUNDS	W	CONCRETE REQUIRED CU. YDS.
25G	6,800	700	4' 0"	2.4
45G	12,800	1,600	5' 3"	4.1
55G	22,900	1,600	6' 0"	5.3
65G	49,600	3,800	7' 9"	8.9

GENERAL NOTES

1. FOR REQUIRED MATERIAL SPECIFICATIONS, INSTALLATION NOTES, AND TOLERANCES SEE DRAWING NUMBER B841300.
2. SEE DRAWING NUMBER A871266 FOR MAXIMUM TOWER HEIGHTS AND ALLOWABLE ANTENNA AREAS.

No. ▲	Revision Description	▲ Date	▲ By

UNR-Rohn

Title

FOUNDATION DETAILS
SELF-SUPPORTING 25,45,55 & 65 TOWERS

Scale: NONE

Drawn by: WDU — Date: 9/29/87

Checked by: WRF — Date: 9/29/87

Approved by Engineering: XK — Date: 2/19/88

Approved by Production — Date

Approved by Sales: PAL — Date: 2-19-88

Unless otherwise specified, dimensions are given in inches.
Tolerances: Decimals ± ; Fractions ± ; Angles ±
Material — Finish — Weight

File Number

Drawing Number: B870725

BRUNING 41503

ROHN™ Products

80/90 Series

Products for a Growing World of Technology

ROHN™ Products

80/90 Series

Unbeatable strength up to 1000 Feet

The 80/90 Series Towers are designed specifically for microwave installations, cellular, PCS, other heavy duty communication, TV and FM broadcast, and meteorological equipment installations. This series has a rating for installation up to 1000 feet, using variable size and weight of tubular or solid steel components. Each 80/90 tower is individually engineered to meet the stringent specifications of your particular job.

The 80/90 Series ROHN Towers are constructed in an equilateral triangular pattern with either steel pipe or solid steel legs and tubular or angle steel cross bracing with bolted construction. The triangular size is 41" on leg centers for the No. 80 Tower and 60.5" on leg centers for the No. 90 Tower. The diameter of the tower legs vary to meet the requirements of the installation. This feature permits considerable flexibility in supplying a tower tailored to specifically meet and adequately handle the equipment to be installed.

"X" Brace Design

The "X" brace design of the 80/90 Series maximizes strength in critical areas as well as allows for future upgrading of the tower for additional loads. And Hot Dip Galvanizing all components after fabrication adds strength and durability. This protects all areas of the tower with a minimum of 2 ounces of molten zinc per square foot of surface applied throughout.

There are four towers in all that make up the 80/90 series, each with their unique benefits. The variations are the #80 Tower Pipe, the #80 Tower Solid, the #90 Tower Pipe, and the #90 Tower Solid.

The #80 Tower Pipe (#80) is a guyed tower with a 41" face. It's designed for individual needs, making it the most economical structure that will still meet your exacting standards for a multiple use tower.

The #80 Tower Solid (#80SR) is a solid member guyed tower with a 41" face. This tower is custom designed with all the attributes of the #80, and is for use in those instances where a solid structure is preferred.

The #90 Tower Pipe (#90) is a guyed tower with a 60" face. This tower is individually engineered for heavy duty applications such as large diameter microwave situations and severe environmental conditions. It's also ideal for collocation of multiple carriers.

The #90 Tower Solid (#90SR) is a solid member guyed tower with a 60" face. This tower offers another option in ROHN's line of heavy duty guyed towers where extreme loads and maximum heights are necessary.

Additional 80/90 Series Features:

- Time tested design
- Steel pipe or solid steel leg design
- Tubular or angle steel cross bracing with bolted construction
- For applications to 1000 feet
- Custom designs, individually engineered
- All parts Hot Dip Galvanized after fabrication

Blank

ROHN™ Products

80 Series

Products for a Growing World of Technology

Blank

Sheet D-2855
(Replaces D-2753)

#80 TOWER

20′ standard sections

Part Number	Weight
83P	430
83PH	520
84	565
84H	685
85H2	850
85HH	1115
83P11	540
83PH11	630
8411	675
84H11	795
85H113	960
85HH11	1230

20′ sections w/guy lug

Part Number	Weight
83PHGA2	720
84HGA2	885
84HGA	1030
⌘85HGA2	1100
85HHGA	1300
83PH11GA	830
84H11GA	1000
85H11GA	1140
⌘85H11GA2	1200
85HH11GA	1400

Transition sections

Part Number	Weight
85H3	875
85HX3	990
85H114	990
85HX113	1200
85HC3	690
85HXC3	775
85H11C3	780
85HX11C3	935

15′ sections

Part Number	Weight
84HC	540
85HC2	660
84H11C	625
85H11C2	750
⌘85HHC	890
85HHC1	860
85HH11C1	955
85HH11C	980

15′ X-braced sections

Part Number	Weight
84HXC	620
85HXC2	745
85HHXC	950
85HHXC1	975
84HX11C	785
85HX11C2	905
85HHX11C	1110
85HHX11C1	1135

20′ X-braced sections w/Top Ch. Support

Part Number	Weight
⌘84HXL2	1175

(Note: 11 = 1-1/2″ heavy wall tubular braces)

20′ X-braced sections

Part Number	Weight
83PX	550
83PHX	635
84X	680
84HX	800
85HX2	960
85HHX	1230
83PX11	755
83PHX11	840
84X11	890
84HX11	1010
85HX112	1170
85HHX11	1435

20′ X-braced sections w/channel torque lug

Part Number	Weight
83PHXTA3	755
84HXTA4	945
85HXTA3	1105
⌘85HXTA4	1160
85HHXTA	1375
83PHX11TA3	965
84HX11TA4	1155
85HX11TA3	1315
⌘85HX11TA4	1370
⌘85HHX11TA	1580
84HXET2	1690
84HXET17	1690
84HXET23	1790
85HXET23	1855
85HXET173	1855
⌘85HXET24	1910
⌘85HXET174	1910
85HHXET2	2120
85HHXET17	2120

20′ angle X-braced sections

Part Number	Weight
84HXE	1580
85HXE1	1730
85HHXE	1995

20′ X-braced sections w/guy lug

Part Number	Weight
83PHXGA2	830
84HXGA	1000
85HXGA	1160
⌘85HXGA2	1205
85HHXGA	1410
83PHX11GA	1045
84HX11GA	1205
85HX11GA	1350
⌘85HX11GA2	1415
85HHX11GA	1600

20′ X-braced sections for use w/TA80HSR

Part Number	Weight
⌘84HXETA3	2050
85HXETA3	2320
⌘85HXETA4	2370
⌘84HXETAT3	2150
85HXETAT3	2380
⌘85HXETAT4	2370
85HHXETA	2515

	Part No.	Description	Wt.
▼	3/4X16BB	Concrete base bolt w/double nuts (12 required)	1-1/2
▼	15/16X16PP	Pier pin (for tapered bases - 1 required)	3
⌘	DP80A	Drainage plates (set of 3)	20
⌘	DP85A	Drainage plates (set of 3)	44
⌘	83ACL	Anti-climb panels (Dwg. C750291)	360
⌘	84ACL	Anti-climb panels (Dwg. C750291)	360
⌘	85ACL	Anti-climb panels (Dwg. C750291)	375
▼	80TB1	5′ tapered base (welded)	360
⌘ ▼	80TB3	5′ tapered base (welded) w/ground lugs on 3 legs	380
⌘ ▼	80TBKD	5′ tapered base (knocked down)	470
⌘ ▼	80TBKDIA	5′ tapered base (knock down) drilled to fit A4722 base insulator	520
⌘ ▼	80TBIA	5′ tapered base (welded) drilled to fit A4197 or A4722 base insulator	430
▼	85TB1	5′ tapered base (welded)	420
⌘ ▼	85TB3	5′ tapered base (welded) w/ground lugs on 3 legs	440
⌘ ▼	85TBI	5′ tapered base (welded), drilled to fit base insulator	450
⌘ ▼	85HTB	5′ tapered base (welded)	520
⌘ ▼	85HTB1	5′ tapered base (welded) w/ground lugs on 3 legs	540
	GA80	Guy assembly (bracket w/torque bars)	115
	GB80	Guy bracket only	95
	GA85	Guy assembly (bracket w/torque bars)	140
	GB85	Guy bracket only	114
⌘ ✦	TA8383	8″ channel torque arm assembly (7-1/2′)	315
⌘ ✦	TA8483	8″ channel torque arm assembly (7-1/2′)	320
⌘ ✦	TA8583	8″ channel torque arm assembly (7-1/2′)	325
✦	TA83103	10″ channel torque arm assembly (7-1/2′)	415
✦	TA84103	10″ channel torque arm assembly (7-1/2′)	420
✦	TA85103	10″ channel torque arm assembly (7-1/2′)	425
✦	TA84129	12″ channel torque arm assembly (7-1/2′)	660
⌘ ✦	TA841210	12″ channel torque arm assembly (7-1/2′)	875
✦	TA85128	12″ channel torque arm assembly (7-1/2′)	665
⌘ ✦	TA85129	12″ channel torque arm assembly (7-1/2′)	880
✦	TA84156	15″ channel torque arm assembly (7-1/2′)	965
✦	TA85156	15″ channel torque arm assembly (7-1/2′)	975
✦	TA8418433	18″ channel torque arm assembly (7-1/2′)	1490
⌘ ✦	TA8418583	18″ channel torque arm assembly (7-1/2′)	1845
✦	TA8518433	18″ channel torque arm assembly (7-1/2′)	1500
⌘ ✦	TA8518583	18″ channel torque arm assembly (7-1/2′)	1860
✦	TA80H	Heavy duty torque arm (16″)	725
✦	TA80HSR	Extra heavy duty torque arm (16″)	2500
	APL6A	Beacon plate (leg mounted) and two cap plates w/nuts and bolts (for sections 83P, 83PH, 84, 84H and 85H)	16
	APL1258UM	Mid beacon plate for inside or outside tower	30
	CP6A	Cap plates (set of 3 w/nuts and bolts) for sections 83P, 83PH, 84, 84H, and 85H	15
	S80	Step bolts, one leg	1/ft.
	KX552A	Platform, outside rotatable (Dwg. D940532)	1420
	PT1L	Platform, panel step-off (Dwg. C730884)	49
	KX550A	Platform, full (Dwg. D920702)	1110

20′ X-braced sections for use with TA80H

Part Number	Weight
84HXTA5	1300
84HXETA	1755
85HXTA6	1440

If ANCO nuts are required, add "AN" suffix to the appropriate section part number.

▼ Towers mounted on this base must be guyed at all times.

✦ This item not to be used without proper design consideration.

⌘ Not a stock item. Allow sufficient time for fabrication.

See Hardware and Accessories section of the ROHN catalog for additional accessories (such as dish mounts, ladders, etc.) for the #80 tower.

F.O.B. Peoria, Illinois

Prices and Specifications subject to change without notice.

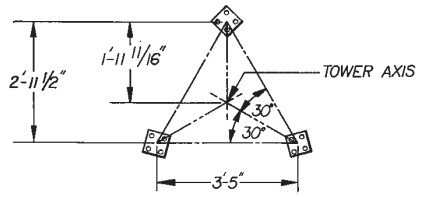

PLAN VIEW

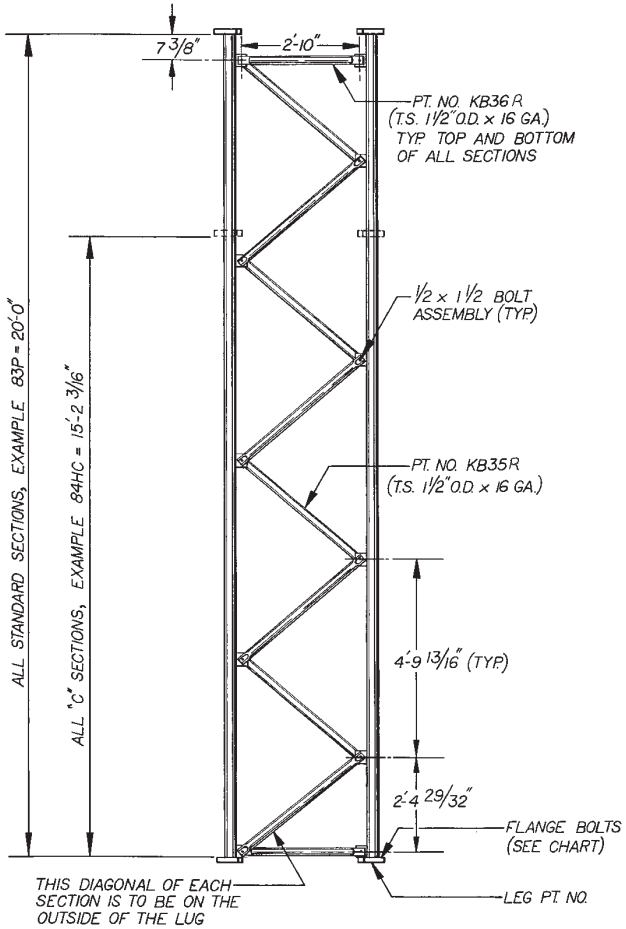

ELEVATION VIEW

TOWER SECTION SCHEDULE

SECTION PT. NO.**	LEGS			FLANGE BOLTS		STEP BOLTS		BRACES		BRACE BOLTS	
	PIPE SIZE	PT. NO.	QTY.	SIZE PT. NO.	QTY.	PT. NO.	QTY.	PT. NO.	QTY.	SIZE PT. NO.	QTY.
83P	2" STD.	KL56	3	3/4 x 2 1/2 210049GA	12			KB35R KB36R	24 6	1/2 x 1 1/2 210018GA	33
83PS	2" STD.	KL56 KL56S	2 1	3/4 x 2 1/2 210049GA	12	5/8 STEP	16	KB35R KB36R	24 6	1/2 x 1 1/2 210018GA	33
83PH	2" X-STR.	KL57	3	3/4 x 2 1/2 210049GA	12			KB35R KB36R	24 6	1/2 x 1 1/2 210018GA	33
83PHS	2" X-STR.	KL57 KL57S	2 1	3/4 x 2 1/2 210049GA	12	5/8 STEP	16	KB35R KB36R	24 6	1/2 x 1 1/2 210018GA	33
84	2 1/2" STD.	KL60	3	3/4 x 2 1/2 210049GA	12			KB35R KB36R	24 6	1/2 x 1 1/2 210018GA	33
84S	2 1/2" STD.	KL60 KL60S	2 1	3/4 x 2 1/2 210049GA	12	5/8 STEP	16	KB35R KB36R	24 6	1/2 x 1 1/2 210018GA	33
84H	2 1/2" X-STR.	KL61	3	3/4 x 2 1/2 210049GA	12			KB35R KB36R	24 6	1/2 x 1 1/2 210018GA	33
84HS	2 1/2" X-STR.	KL61 KL61S	2 1	3/4 x 2 1/2 210049GA	12	5/8 STEP	16	KB35R KB36R	24 6	1/2 x 1 1/2 210018GA	33
84HC	2 1/2" X-STR.	KL159	3	3/4 x 2 1/2 210049GA	12			KB35R KB36R	18 6	1/2 x 1 1/2 210018GA	27
84HCS	2 1/2" X-STR.	KL159 KL159S	2 1	3/4 x 2 1/2 210049GA	12	5/8 STEP	12	KB35R KB36R	18 6	1/2 x 1 1/2 210018GA	27
85	3" STD.	KL64	3	7/8 x 3 1/2 210063GA	12			KB35R KB36R	24 6	1/2 x 1 1/2 210018GA	33
85S	3" STD.	KL64 KL64S	2 1	7/8 x 3 1/2 210063GA	12	5/8 STEP	16	KB35R KB36R	24 6	1/2 x 1 1/2 210018GA	33
85H	3" X-STR.	KL65	3	7/8 x 3 1/2 210063GA	12			KB35R KB36R	24 6	1/2 x 1 1/2 210018GA	33
85HS	3" X-STR.	KL65 KL65S	2 1	7/8 x 3 1/2 210063GA	12	5/8 STEP	16	KB35R KB36R	24 6	1/2 x 1 1/2 210018GA	33
85HC	3" X-STR.	KL163	3	7/8 x 3 1/2 210063GA	12			KB35R KB36R	18 6	1/2 x 1 1/2 210018GA	27
85HCS	3" X-STR.	KL163 KL163S	2 1	7/8 x 3 1/2 210063GA	12	5/8 STEP	12	KB35R KB36R	18 6	1/2 x 1 1/2 210018GA	27
* 845H	2 1/2" X-STR.	KL68	3	7/8 x 3 1/2 210063GA	12			KB35R KB36R	24 6	1/2 x 1 1/2 210018GA	33
*845HS	2 1/2" X-STR.	KL68 KL68S	2 1	7/8 x 3 1/2 210063GA	12	5/8 STEP	16	KB35R KB36R	24 6	1/2 x 1 1/2 210018GA	33

* TRANSITION SECTION WITH 7" FLANGE PLATES AT THE BOTTOM AND 6" FLANGE PLATES AT THE TOP. 7" FLANGE PLATES MUST BE BETWEEN NO. 85 SECTIONS AND ALL OTHER SECTIONS.

** SECTION PART NUMBERS ENDING WITH AN "S" INDICATE THAT THE SECTIONS WILL HAVE STEP BOLTS ON ONE LEG FOR CLIMBING.

GENERAL NOTES:

1. PAL NUTS ARE PROVIDED FOR ALL TOWER BOLTS.
2. FOR LEG FABRICATION, SEE DRAWINGS NUMBERED: C760013, C760014A, C760015, C760016, C760017, C760018, C760019, AND C760020.
3. FOR BRACE FABRICATION, SEE DRAWING NUMBER B660719.
4. FABRICATION DRAWINGS ARE FOR SHOP USE ONLY.

No. ▲	Revision Description	▲ Date	▲ By
R5	REVISED TOWER SECTION SCHEDULE	11-29-90	WEB
R4	REVISED TOWER SECTION SCHEDULE	1-31-90	WEB
R3	REDRAWN	12-8-81	AJG

ROHN

Title: MODEL NO. 80 TOWER STANDARD SECTIONS

Scale: NONE

Unless otherwise specified, dimensions are given in inches. Tolerances: Decimals ±, Fractions ±, Angles ±

Drawn by: AJG 12-8-81

Checked by: GPW 12-22-81

Approved by Engineering: TS 12-22-81

Approved by Production: Date

Approved by Sales: GR 12-22-81

Material: Finish: Weight:

File Number:

Drawing Number: C681228 R5

ROHN™ Products

90 Series

Products for a Growing World of Technology

#90 TOWER

	Part No.	Wt.
⌘ +	920A	705
⌘ +	920B	815
⌘ +	920C	915
⌘ +	920D	1115
⌘ +	920E	1275
⌘ +	925A	810
⌘ +	925AB	845
⌘ +	925AT	840
⌘ +	925B	935
⌘ +	925BB	955
⌘ +	925BT	950
⌘ +	925C	1035
⌘ +	925CB	1060
⌘ +	925CT	1050
⌘ +	925D	1235
⌘ +	925DB	1265
⌘ +	925DT	1250
⌘ +	925E	1395
⌘ n	925EB	1420
⌘ +	930A	1035
⌘ +	930B	1140
⌘ +	930C	1240
⌘ +	930D	1440
⌘ +	930E	1600
⌘ +	930F	1815
⌘ +	935B	1285
⌘ +	935C	1385
⌘ +	935D	1580
⌘ +	935E	1745
⌘ +	935F	1960

	Part No.	Wt.
⌘ +	940B	1440
⌘ n	940BB	1520
⌘ +	940C	1540
⌘ n	940CB	1600
⌘ n	940CT	1595
⌘ +	940D	1735
⌘ +	940E	1900
⌘ n	940EB	1975
⌘ n	940ET	1955
⌘ +	940F	2110
⌘ +	950C	2055
⌘ +	950D	2245
⌘ +	950E	2410
⌘ +	950F	2615
⌘ +	955C	2585
⌘ +	955D	2760
⌘ +	955E	2945
⌘ +	955F	3110
⌘ d	920ETAX **	1760
⌘	925ETAX **	1865
⌘ +	930ETAX **	52095
⌘	935ETAX **	2190
⌘	940ETAX **	2405
⌘	950ETAX **	2920
⌘	955ETAX **	3425
⌘	925EHHD **	2220
⌘	930EHHD **	2415
⌘	935EHHD **	2550
⌘	940EHHD **	2695
⌘	950EHHD **	3155
⌘	955EHHD **	3690
⌘ n	955FHHD **	2710

Notes: D = 2" x 2" x 1/4" brace with 1-5/8" bolts E = 2" x 2" x 1/4" brace with 2-5/8" bolts F = 2-1/2" x 2-1/2" x 1/4" brace with 2-3/4" bolts

For step bolts on one leg, add "SB" suffix and	20
Top section (if not a heavy duty torque arm section), add	35
*Add "GAL3" suffix for section w/standard guy lugs and	110
*Add "GAL3SB" suffix (same as above) w/step bolts one leg and	130
*Add "GAL2" suffix for section w/heavy duty guy legs and	210
*Add "GAL2SB" suffix (same as above) w/step bolts one leg and	230
*Add "GAL4" suffix for sections w/extra heavy duty guy lugs &	
*Add "GAL4SB" suffix (same as above) w/step bolts one leg and	
Add "TL44" or TL164" suffix for section w/standard torque arm lugs and	10

For anco nuts, add "AN" suffix and $25 to the appropriate section dealer price. For 10', 12' and 15' sections, use appropriate 20' section dealer price.

*4 in part number designates 1-1/8" wire maximum, 3 designates 5/8" wire maximum and 2 designates 7/8" wire maximum.
**Torque arm section only. Show torque arm as a separate item on parts lists.
⌘ **Not a stock item. Allow sufficient time for fabricating.**

#90 TOWER

	Part No.			Wt.
+	TB90		8′ tapered base, 4″ EH	1310
np	TB901		8′ tapered base, 4″ EH, with ground lugs	1330
np	TB90A1		10′ tapered base extension, 4″ EH, with ground lugs (Dwg. C730307)	1760
⌘	TB950	(*)	8′ tapered base, 5″ EH	2005
⌘ +	TB950A		10′ tapered base, 5″ EH	2680
⌘ +	TB955		8′ tapered base, 5-1/2″ EH	2300
⌘	TB955A		10′ tapered base, 5-1/2″ EH	3025
d	JB90TB		Jack pads for #90 tapered base	105
+	APL6A		Beacon plate (leg mounted) and two cap plates w/nuts and bolts (for 920 and 925 series)	16
+	APL7A		Beacon plate (leg mounted) and two cap plates w/nuts and bolts (for 930, 935 and 940 series)	17
⌘ +	APL95A		Beacon plate (leg mounted) and two cap plates w/nuts and bolts (for 950 series)	30
+	APL1258UM		Mid beacon plate	30
	CP6A		Cap plates (set of 3 w/nuts and bolts)	15
	CP7A		Cap plates (set of 3 w/nuts and bolts)	15
⌘	CP95A		Cap plates (set of 3 w/nuts and bolts)	17
⌘ +	9T20*	(*)	Channel torque arm - 12″	900
⌘ d	9T30*	(*)	Channel torque arm - 12″	1200
⌘ +	9T33*	(*)	Channel torque arm - 15″	1350
⌘ +	9T43*	(*)	Channel torque arm - 18″	1950
⌘ +	9T58*	(*)	Channel torque arm - 18″	2500
+	TA90H*		Heavy duty torque arm	1065
⌘ +	TA90HHD*		Extra heavy duty torque arm	2765
⌘ +	TA95H*		Heavy duty torque arm	1050
⌘ +	TA95HHD*		Extra heavy duty torque arm	2720
⌘ +	L90IS10	(* *)	10′ inside corner mounted standard ladder (Dwg. C820184) 4/ft.	
⌘ +	L90IS20	(* *)	20′ inside corner mounted standard ladder (Dwg. C820184) 8/ft.	
⌘ +	L90IH10	(* *)	10′ inside corner mounted heavy ladder 32.50/ft. 7/ft.	
⌘ +	L90IH20	(* *)	20′ inside corner mounted heavy ladder 22.50/ft. 11/ft.	
	5/8STEP	(S90)	Step bolts, one leg (tower ht. x .8 = qty.) 5.00/ft. 1/ft.	
⌘	LPL90I	(*)	Inside ladder platform	85
np	T1L		Platform, panel step-off (Dwg. C730884)	49
np	NK1082A		Platform, full assy. for #90 (Dwg. D910472)	1050

*Specify leg size and order hardware separately. Section must be marked with torque arm.

(*) Part number is for sales pricing reference only. See appropriate engineering drawings to determine assembly number.

(**) Order hardware separately.

Not a stock item. Allow sufficient time for fabricating.

See Hardware and Accessories Section of the Rohn Catalog for additional accessories (i.e. dish mounts, ladders, etc.) for the #80 tower.

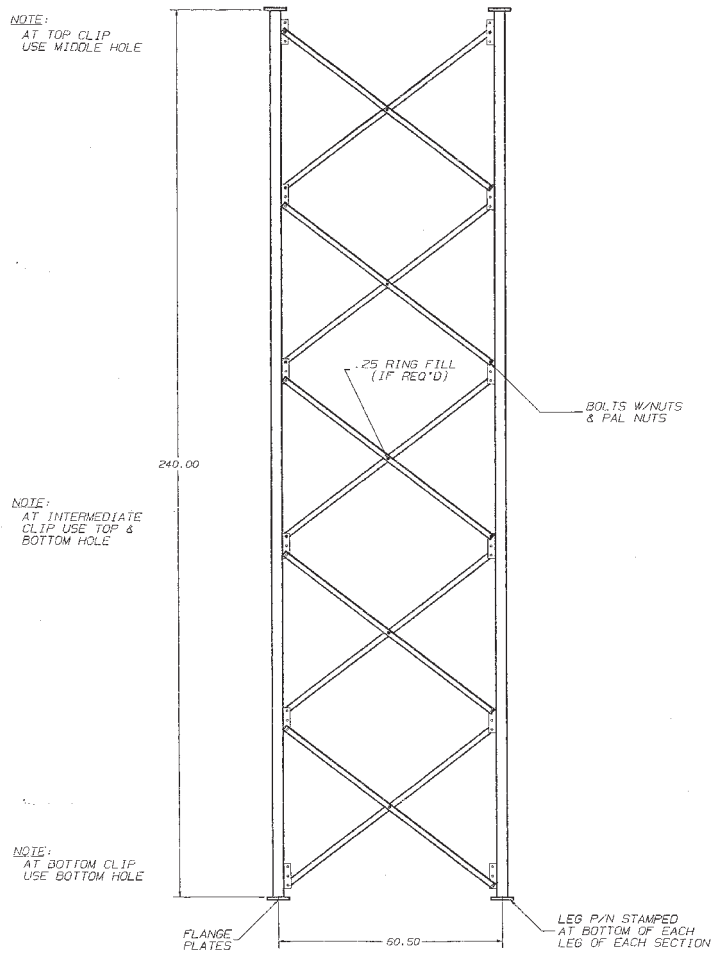

E L E V A T I O N

TOWER SECTION*	LEGS PIPE SIZE	LEGS P/N	FLANGE PLATE SIZE TOP	FLANGE PLATE SIZE BOTTOM	E BOLTS SIZE @ BOTTOM	BRACES SIZE ANGLE	BRACES P/N 90 REQ'D	BRACES BOLTS	BRACES BOLT ASSY NO.
920A	2.50 STD.	NL 21	6X6X.75	6X6X.75	12-.75X2.75	1.50X1.50X.13	ND 7	75-.50X1.25	210017GA
920B	2.50 STD.	NL 21	6X6X.75	6X6X.75	12-.75X2.75	1.50X1.50X.19	ND 8	75-.50X1.25	210017GA
920C	2.50 STD.	NL 22	6X6X.75	6X6X.75	12-.75X2.75	1.75X1.75X.19	ND 9	75-.63X1.50	210029GA
920D	2.50 STD.	NL 22	6X6X.75	6X6X.75	12-.75X2.75	2X2X.25 * *	ND 10	75-.63X1.75	210030GA
925A	2.50 EH	NL 23	6X6X.75	6X6X.75	12-.75X2.75	1.50X1.50X.13	ND 7	75-.50X1.25	210017GA
925AB	2.50 EH	NL 24	6X6X.75	7X7X1	12-.88X3.50	1.50X1.50X.13	ND 7	75-.50X1.25	210017GA
925AT	2.50 EH	NL 25	7X7X1	6X6X.75	12-.75X2.75	1.50X1.50X.13	ND 7	75-.50X1.25	210017GA
925B	2.50 EH	NL 23	6X6X.75	6X6X.75	12-.75X2.75	1.50X1.50X.19	ND 8	75-.50X1.25	210017GA
925BB	2.50 EH	NL 24	6X6X.75	7X7X1	12-.88X3.50	1.50X1.50X.19	ND 8	75-.50X1.25	210017GA
925BT	2.50 EH	NL 25	7X7X1	6X6X.75	12-.75X2.75	1.50X1.50X.19	ND 8	75-.50X1.25	210017GA
925C	2.50 EH	NL 26	6X6X.75	6X6X.75	12-.75X2.75	1.75X1.75X.19	ND 9	75-.63X1.50	210029GA
925CB	2.50 EH	NL 27	6X6X.75	7X7X1	12-.88X3.50	1.75X1.75X.19	ND 9	75-.63X1.50	210029GA
925CT	2.50 EH	NL 28	7X7X1	6X6X.75	12-.75X2.75	1.75X1.75X.19	ND 9	75-.63X1.50	210029GA
925D	2.50 EH	NL 26	6X6X.75	6X6X.75	12-.75X2.75	2X2X.25 * *	ND 10	75-.63X1.75	210030GA
925DB	2.50 EH	NL 27	6X6X.75	7X7X1	12-.88X3.50	2X2X.25 * *	ND 10	75-.63X1.75	210030GA
925DT	2.50 EH	NL 28	7X7X1	6X6X.75	12-.75X2.75	2X2X.25 * *	ND 10	75-.63X1.75	210030GA
930A	3.00 EH	NL 29	7X7X1	7X7X1	12-.88X3.50	1.50X1.50X.13	ND 11	75-.50X1.25	210017GA
930B	3.00 EH	NL 29	7X7X1	7X7X1	12-.88X3.50	1.50X1.50X.19	ND 12	75-.50X1.25	210017GA
930C	3.00 EH	NL 30	7X7X1	7X7X1	12-.88X3.50	1.75X1.75X.19	ND 13	75-.63X1.50	210029GA
930D	3.00 EH	NL 30	7X7X1	7X7X1	12-.88X3.50	2X2X.25 * *	ND 14	75-.63X1.75	210030GA
935C	3.50 EH	NL 31	7X7X1	7X7X1	12-.88X3.50	1.75X1.75X.19	ND 15	75-.63X1.50	210029GA
935D	3.50 EH	NL 31	7X7X1	7X7X1	12-.88X3.50	2X2X.25 * *	ND 16	75-.63X1.75	210030GA
940C	4.00 EH	NL 32	7X7X1	7X7X1	12-.88X3.50	1.75X1.75X.19	ND 17	75-.63X1.50	210029GA
940D	4.00 EH	NL 32	7X7X1	7X7X1	12-.88X3.50	2X2X.25 * *	ND 18	75-.63X1.75	210030GA

* "SB" SUFFIX ON SECTION NO. INDICATES 2 STD. LEGS & 1 STEP BOLT LEG.

EXAMPLE:
920 A = 3-NL 21 LEGS
920 ASB = 2-NL 21 LEGS & 1-NL 21S LEG

* * 15-.25 RING FILLS REQ'D.

FABRICATION DWG'S
(FOR SHOP USE ONLY)
C721126 BRACES P/N ND 1-ND 6
C721125 BRACES P/N ND 7-ND 18
C721124 LEGS

No.	Revision Description	Date	By	Rev By	Chk By	Appd By
1	RECORAW	6/18/98	SDP	LLK	TC	

ROHN

Series NONE	By	Date
Drawn:	JER	2/14/73
Checked:	KDU	2/23/73
App. Eng.:	CW	2/23/73
Parent File:		

NO. 90 TOWER
20' SECTION ASSEMBLY

DWG. FILE:

DWG. NO.: D730205 4
SHEET 1 OF 1 REV.

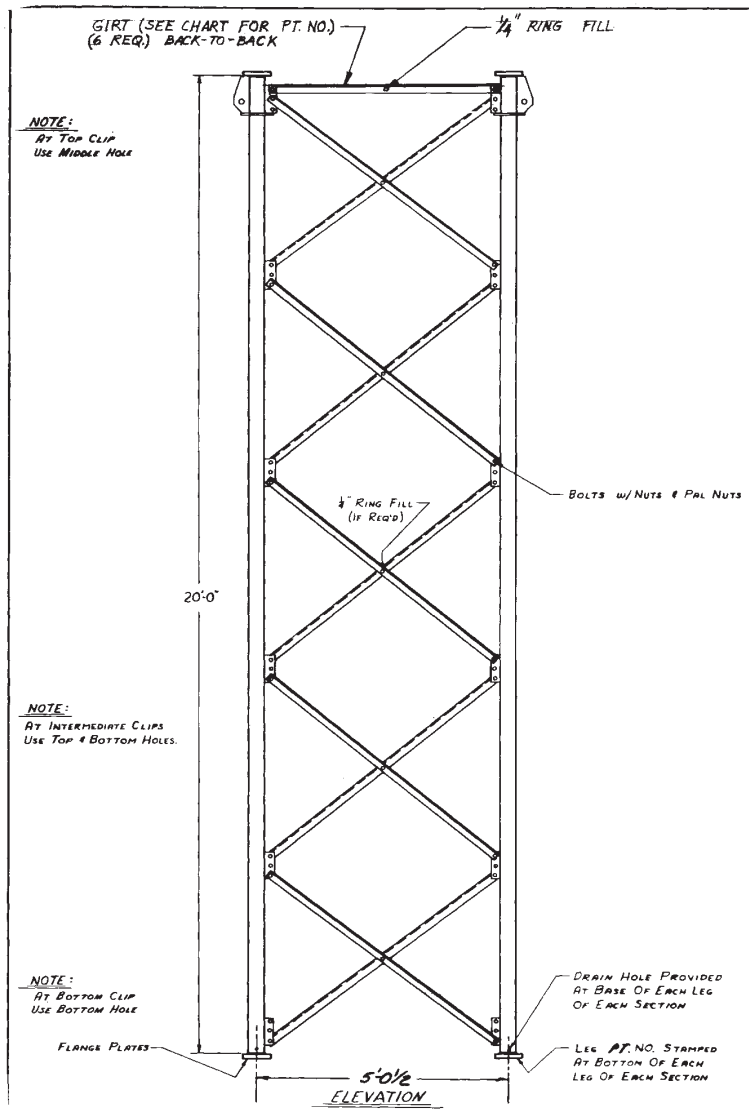

TOWER SECTION *	LEGS SIZE	LEGS PT. NO.	FLANGE PLATES SIZE TOP	FLANGE PLATES SIZE BOTTOM	℄ BOLTS SIZE @ BOTTOM	BRACES SIZE ANGLE	BRACES PT. NO. 30 REQ'D.	BRACES BOLTS 3-3/4" FT. WASH.	GIRT PT. NO.
920 AGA	PIPE 2 1/2 STD.	NL 33	6×6×3/8	6×6×3/8	12-3/4×2 3/4	1 1/2×1 1/2×1/8	ND 7	75-1/2×1 1/4 9-1/2×1 1/2	ND 1
920 BGA	PIPE 2 1/2 STD.	NL 33	6×6×3/8	6×6×3/8	12-3/4×2 3/4	1 1/2×1 1/2×3/16	ND 8	75-1/2×1 1/4 9-1/2×1 1/2	ND 1
920 CGA	PIPE 2 1/2 STD.	NL 34	6×6×3/8	6×6×3/8	12-3/4×2 3/4	1 3/4×1 3/4×3/16	ND 9	84-3/8×1 3/4 84 1/4" WASHER	ND 2
920 DGA	PIPE 2 1/2 STD.	NL 34	6×6×3/8	6×6×3/8	12-3/4×2 3/4	⊕ 2×2×1/4	ND 10	84-5/8×1 3/4	ND 2
925A GA	PIPE 2 1/2 X-STR.	NL 35	6×6×3/8	6×6×3/8	12-3/4×2 3/4	1 1/2×1 1/2×1/8	ND 7	75-1/2×1 1/4 9-1/2×1 1/2	ND 1
925ABGA	PIPE 2 1/2 X-STR	NL 36	6×6×3/8	7×7×1	12-7/8×3 1/2	1 1/2×1 1/2×1/8	ND 7	75-1/2×1 1/4 9-1/2×1 1/2	ND 1
925ATGA	PIPE 2 1/2 X-STR	NL 37	7×7×1	6×6×3/8	12-3/4×2 3/4	1 1/2×1 1/2×1/8	ND 7	75-1/2×1 1/4 9-1/2×1 1/2	ND 1
925B GA	PIPE 2 1/2 X-STR	NL 35	6×6×3/8	6×6×3/8	12-3/4×2 3/4	1 1/2×1 1/2×3/16	ND 8	75-1/2×1 1/4 9-1/2×1 1/2	ND 1
925BBGA	PIPE 2 1/2 X-STR	NL 36	6×6×3/8	7×7×1	12-7/8×3 1/2	1 1/2×1 1/2×3/16	ND 8	75-1/2×1 1/4 9-1/2×1 1/2	ND 1
925BTGA	PIPE 2 1/2 X-STR	NL 37	7×7×1	6×6×3/8	12-3/4×2 3/4	1 1/2×1 1/2×3/16	ND 8	75-1/2×1 1/4 9-1/2×1 1/2	ND 1
925C GA	PIPE 2 1/2 X-STR	NL 38	6×6×3/8	6×6×3/8	12-3/4×2 3/4	1 3/4×1 3/4×3/16	ND 9	84-3/8×1 3/4 84 1/4" WASHER	ND 2
925CBGA	PIPE 2 1/2 X-STR	NL 39	6×6×3/8	7×7×1	12-7/8×3 1/2	1 3/4×1 3/4×3/16	ND 9	84-3/8×1 3/4 84 1/4" WASHER	ND 2
925CTGA	PIPE 2 1/2 X-STR	NL 40	7×7×1	6×6×3/8	12-3/4×2 3/4	1 3/4×1 3/4×3/16	ND 9	84-3/8×1 3/4 84 1/4" WASHER	ND 2
925D GA	PIPE 2 1/2 X-STR	NL 38	6×6×3/8	6×6×3/8	12-3/4×2 3/4	⊕ 2×2×1/4	ND 10	84-5/8×1 3/4	ND 2
925DBGA	PIPE 2 1/2 X-STR	NL 39	6×6×3/8	7×7×1	12-7/8×3 1/2	⊕ 2×2×1/4	ND 10	84-5/8×1 3/4	ND 2
925DTGA	PIPE 2 1/2 X-STR	NL 40	7×7×1	6×6×3/8	12-3/4×2 3/4	⊕ 2×2×1/4	ND 10	84-5/8×1 3/4	ND 2
930A GA	PIPE 3 X-STR	NL 41	7×7×1	7×7×1	12-7/8×3 1/2	1 1/2×1 1/2×1/8	ND 11	75-1/2×1 1/4 9-1/2×1 1/2	ND 3
930B GA	PIPE 3 X-STR	NL 41	7×7×1	7×7×1	12-7/8×3 1/2	1 1/2×1 1/2×3/16	ND 12	75-1/2×1 1/4 9-1/2×1 1/2	ND 3
930C GA	PIPE 3 X-STR	NL 42	7×7×1	7×7×1	12-7/8×3 1/2	1 3/4×1 3/4×1/2	ND 13	84-3/8×1 3/4 84 1/4" WASHER	ND 4
930D GA	PIPE 3 X-STR	NL 42	7×7×1	7×7×1	12-7/8×3 1/2	⊕ 2×2×1/4	ND 14	84-5/8×1 3/4	ND 4
935C GA	PIPE 3 1/2 X-STR	NL 43	7×7×1	7×7×1	12-7/8×3 1/2	1 3/4×1 3/4×3/16	ND 15	84-3/8×1 3/4 84 1/4" WASHER	ND 5
935D GA	PIPE 3 1/2 X-STR	NL 43	7×7×1	7×7×1	12-7/8×3 1/2	⊕ 2×2×1/4	ND 16	84-5/8×1 3/4	ND 5
940C GA	PIPE 4 X-STR	NL 44	7×7×1	7×7×1	12-7/8×3 1/2	1 3/4×1 3/4×3/16	ND 17	84-3/8×1 3/4 84 1/4" WASHER	ND 6
940D GA	PIPE 4 X-STR	NL 44	7×7×1	7×7×1	12-7/8×3 1/2	⊕ 2×2×1/4	ND 18	84-5/8×1 3/4	ND 6

⊕ 15-1/4" RING FILLS REQ'D.

*"SB" SUFFIX ON SECTION NO. INDICATES 2-STD. LEGS & 1-STEP BOLT LEG.

EXAMPLE

920 AGA = 3-NL 33 LEGS
920AGASB = 2-NL 33 LEGS & 1-NL 33S LEG

FABRICATION DWG'S. (FOR SHOP USE ONLY)

C-721124 BRACES PT. NO'S. ND-1 THRU ND-6
C-721125 BRACES PT. NO'S. ND-7 THRU ND-18
C-721131 LEGS

REV.	DESCRIPTION	DATE	BY
R4	ADDED GIRT & P/N'S	3-12-84	
R3	REM'D. GIRT P/N'S., REV. BOLT QTY'S	2-22-84	MN
R2	ADDED STEP BOLT PT. NO'S.	12-8-80	KTC
R1	REMOVE LADDER REF.	11-7-73	

REVISIONS

ROHN MANUFACTURING

TITLE: NO. 90 TOWER
20' GUYED SECTION ASSEMBLY

THIS DRAWING IS THE PROPERTY OF ROHN. IT IS NOT TO BE REPRODUCED, COPIED, OR TRACED IN WHOLE OR IN PART WITHOUT OUR WRITTEN CONSENT.

FILE NO.

SCALE NONE			
DR. JER	2-14-73		
CK. RTK	2-23-73		
APP. KTC	2-23-73		
MFG. KTC	2-26-73		

DWG. NO. D-730206 R4

BILL OF MATERIAL				
ITEM	QUAN.	PART NO.	DESCRIPTION	DWG. NO.
1	1	NP 1	UPPER BASE ASSY.	C721216
2	1	NP 2	LOWER BASE ASSY.	"
3	1	NP 3	BASE EXTENSION	C730308
4	24	210063GA	7/8 X 3 1/2 BOLT ASSY	C770404

NOTE: MUST BE ASSEMBLED W/ IDENTICAL MATCH P/N'S ON THE SAME LEG.

TEMPORARY STEEL GUYING IS NECESSARY DURING INSTALLATION OR DISMANTLING.

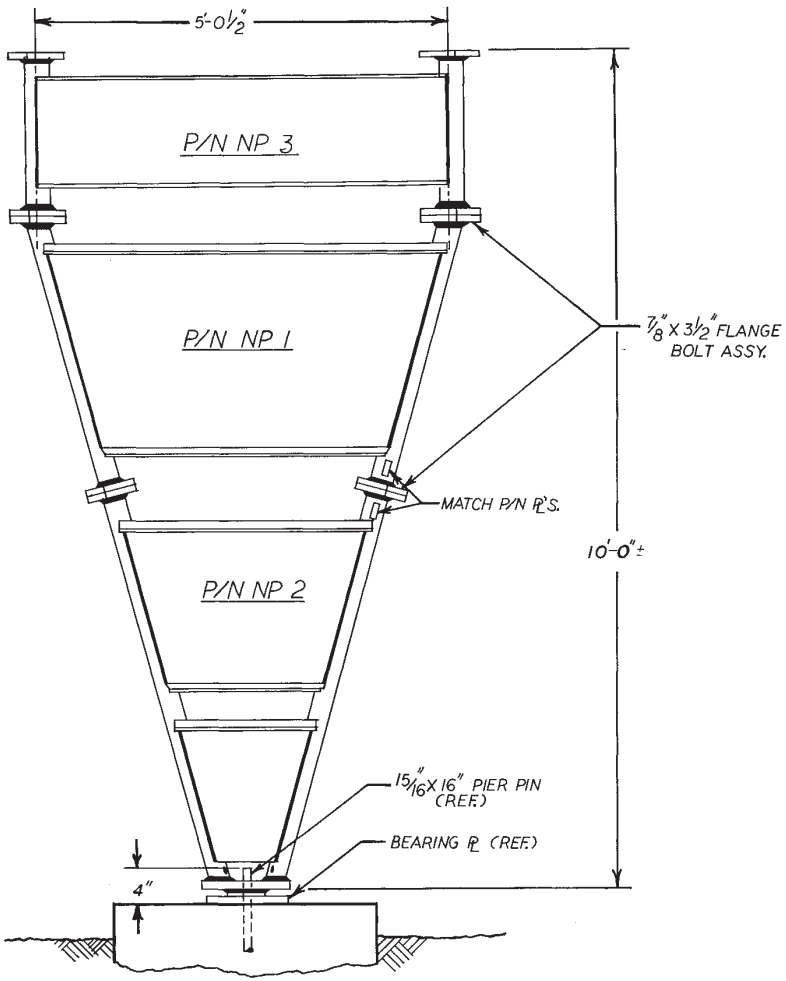

ELEVATION

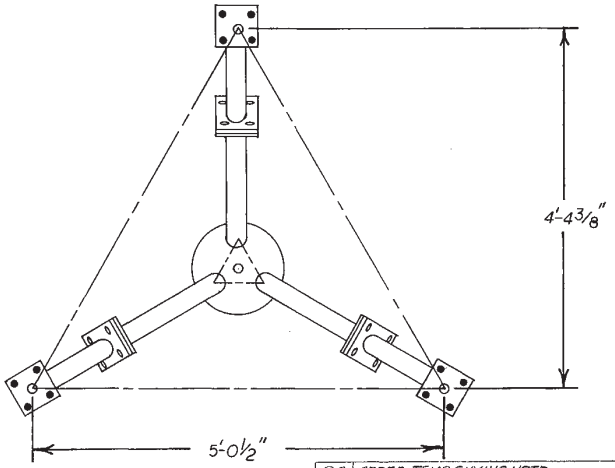

PLAN

ASSY P/N TB90A

No.	Revision Description	Date	By
R6	ADDED TEMP. GUYING NOTE	11-3-86	RBV
R5	REDRAWN	1-30-85	GLJ

UNR-Rohn
Division of UNR, Inc.

Title: TAPERED BASE ASSEMBLY FOR MODEL 90 SERIES TOWER

Scale: NONE

Drawn by: WDU Date: 3-14-73

Checked by: TS Date: 3-14-73

Approved by Engineering: CW Date: 3-14-73

Approved by Production: Date:

Approved by Sales: GR Date: 3-14-73

Unless otherwise specified, dimensions are given in inches.
Tolerances: Decimals ± Fractions ± Angles ±
Material Finish Weight

File Number

Drawing Number: C730307 R6

BRUNING 40-105 41503-3

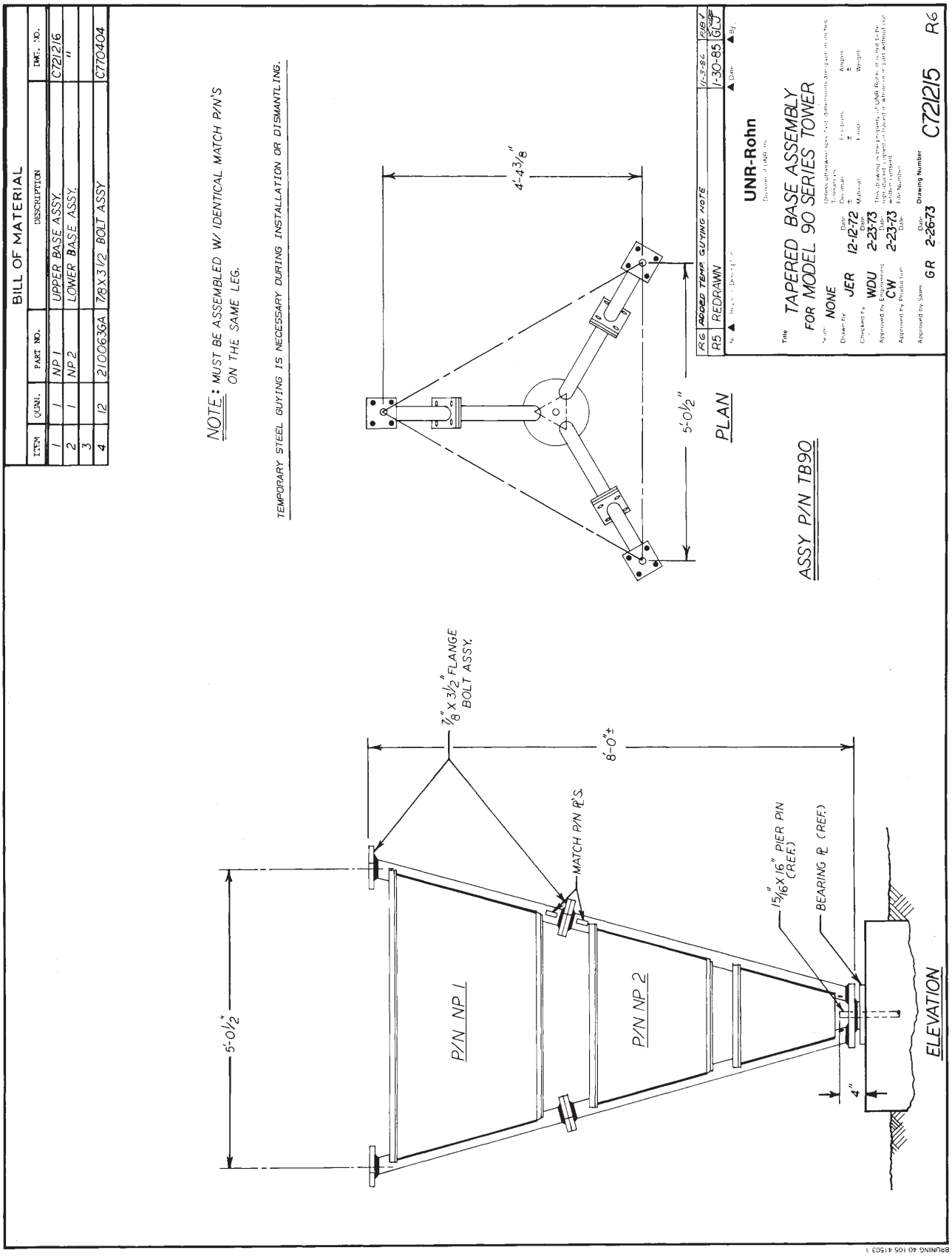
BILL OF MATERIAL
ITEM | QUAN. | PART NO. | DESCRIPTION | DWG. NO.
1 | 1 | NP1 | UPPER BASE ASSY. | C721216
2 | 1 | NP2 | LOWER BASE ASSY. | "
3 | | | | |
4 | 12 | 210063GA | 7/8 X 3 1/2 BOLT ASSY | C770404
NOTE: MUST BE ASSEMBLED W/ IDENTICAL MATCH P/N'S ON THE SAME LEG.
TEMPORARY STEEL GUYING IS NECESSARY DURING INSTALLATION OR DISMANTLING.
4'-4 3/8"
5'-0 1/2"
PLAN
R6 ADDED TEMP GUYING NOTE 11-3-86 PJB
R5 REDRAWN 1-30-85 GLJ
UNR-Rohn
TAPERED BASE ASSEMBLY FOR MODEL 90 SERIES TOWER
NONE
JER 12-12-72
WDU 2-23-73
CW 2-23-73
GR 2-26-73
C721215 R6
ASSY P/N TB90
7/8" X 3 1/2" FLANGE BOLT ASSY.
8'-0"±
MATCH P/N R'S.
15/16" X 16" PIER PIN (REF.)
BEARING ℄ (REF.)
5'-0 1/2"
P/N NP1
P/N NP2
4"
ELEVATION

ROHN™ Products

80/90 Series Accessories

Products for a Growing World of Technology

WAVEGUIDE BRACE BRACKET ASSEMBLIES

Waveguide Brace Bracket Assemblies are similar to ROHN's Waveguide Ladder Assemblies, only these mount directly to the top horizontal and the diagonal brace of a ROHN #80 or #90 guyed tower by way of a special u-bolt assembly. The rungs for these brace brackets are also pre-punched with twelve 7/16" diameter holes to accommodate butterfly hangers and twelve 3/4" diameter holes to accept snap-in hangers. A #80 tower would require four diagonal brace brackets and one horizontal for each 20 ft. section. A #90 tower would require five diagonals and one horizontal for each 20ft. section. All items are hot dip galvanized.

Model 80 Tower connection

Part Number	Description
WAF801211	For 1-1/2" Dia. tube horizontals
WAF801212	For 1-1/2" Dia. tube diagonals
WAF801213	For angle horizontals
WAF801214	For 2 bolt 2" x 1/4" diagonals
WAF801215	For 1 bolt 1-3/4" x .19" diagonals
WAF901521	For #90 diagonal braces

Model 90 Tower connection

Model 80 Tower

Model 90 Tower

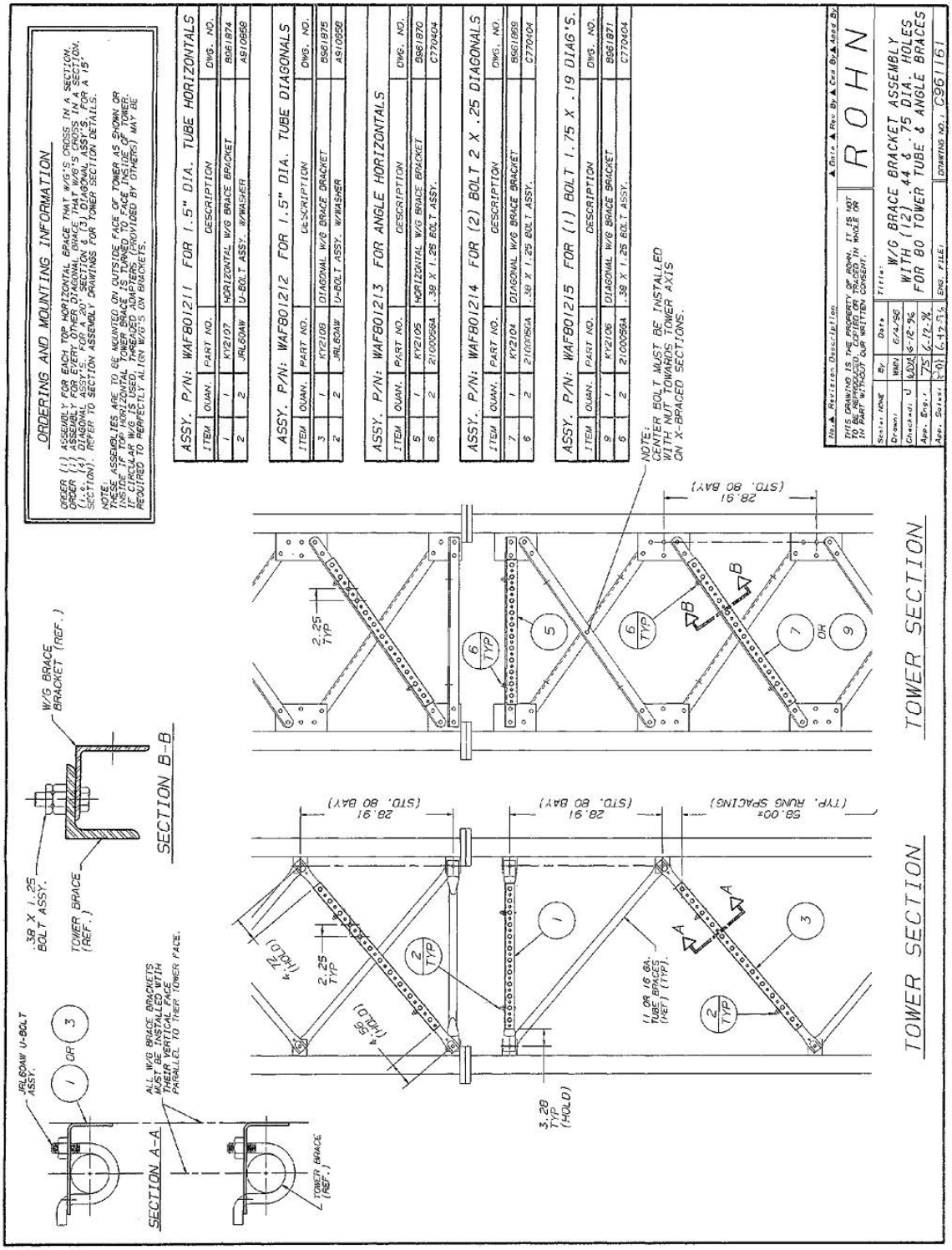
ORDERING AND MOUNTING INFORMATION
ORDER (1) ASSEMBLY FOR EACH TOP HORIZONTAL BRACE THAT W/G'S CROSS IN A SECTION.
ORDER (1) ASSEMBLY FOR EVERY OTHER DIAGONAL BRACE THAT W/G'S CROSS IN A SECTION.
(i.e. (4) DIAGONAL ASSY'S. FOR A 20' SECTION & (3) DIAGONAL ASSY'S. FOR A 15' SECTION). REFER TO SECTION ASSEMBLY DRAWINGS FOR TOWER SECTION DETAILS.
NOTE:
THESE ASSEMBLIES ARE TO BE MOUNTED ON OUTSIDE FACE OF TOWER AS SHOWN OR (INSIDE IF TOP HORIZONTAL TOWER BRACE IS TURNED TO FACE INSIDE OF TOWER). IF CIRCULAR W/G IS USED, THREADED ADAPTERS (PROVIDED BY OTHERS) MAY BE REQUIRED TO PERFECTLY ALIGN W/G'S ON BRACKETS.
ASSY. P/N: WAF801211 FOR 1.5" DIA. TUBE HORIZONTALS
ITEM QUAN. PART NO. DESCRIPTION DWG. NO.
1 1 KY2107 HORIZONTAL W/G BRACE BRACKET B061874
2 2 JRL60AW U-BOLT ASSY. W/WASHER AS10658
ASSY. P/N: WAF801212 FOR 1.5" DIA. TUBE DIAGONALS
ITEM QUAN. PART NO. DESCRIPTION DWG. NO.
3 1 KY2108 DIAGONAL W/G BRACE BRACKET B061875
2 2 JRL60AW U-BOLT ASSY. W/WASHER AS10658
ASSY. P/N: WAF801213 FOR ANGLE HORIZONTALS
ITEM QUAN. PART NO. DESCRIPTION DWG. NO.
5 1 KY2105 HORIZONTAL W/G BRACE BRACKET B061870
6 2 210005GA .38 X 1.25 BOLT ASSY. C770404
ASSY. P/N: WAF801214 FOR (2) BOLT 2 X .25 DIAGONALS
ITEM QUAN. PART NO. DESCRIPTION DWG. NO.
7 1 KY2104 DIAGONAL W/G BRACE BRACKET B061869
6 2 210005GA .38 X 1.25 BOLT ASSY. C770404
ASSY. P/N: WAF801215 FOR (1) BOLT 1.75 X .19 DIAG'S.
ITEM QUAN. PART NO. DESCRIPTION DWG. NO.
9 1 KY2106 DIAGONAL W/G BRACE BRACKET B061871
6 2 210005GA .38 X 1.25 BOLT ASSY. C770404
NOTE:
CENTER BOLT MUST BE INSTALLED WITH NUT TOWARDS TOWER AXIS ON X-BRACED SECTIONS.
(STD. 80 BAY)
28.91
2.25 TYP
6 TYP
5
7 OR 9
B
TOWER SECTION
(STD. 80 BAY)
28.91
(STD. 80 BAY)
28.91
(TYP. RUNG SPACING)
58.00*
2.25 TYP
(HOLD)
4
(HOLD)
4
2 TYP
1
11 OR 16 GA. TUBE BRACES (REF.) (TYP).
A
3
3.28 TYP (HOLD)
TOWER SECTION
JRL60AW U-BOLT ASSY.
1 OR 3
SECTION A-A
ALL W/G BRACE BRACKETS MUST BE INSTALLED WITH THEIR VERTICAL FACE PARALLEL TO THEIR TOWER FACE.
TOWER BRACE (REF.)
.38 X 1.25 BOLT ASSY.
TOWER BRACE (REF.)
W/G BRACE BRACKET (REF.)
SECTION B-B
No. ▲ Revision Description ▲ Date ▲ Rev By ▲ Chk By ▲ Appd By
THIS DRAWING IS THE PROPERTY OF ROHN, IT IS NOT TO BE REPRODUCED, COPIED OR TRACED IN WHOLE OR IN PART WITHOUT OUR WRITTEN CONSENT.
ROHN
Scale: NONE
Drawn: WMN 6/4/96
Checked: J. LOUX 6-12-96
App. Eng.: TS 6-12-96
App. Sales: 6-17-96
Title: W/G BRACE BRACKET ASSEMBLY WITH (12) .44 & .75 DIA. HOLES FOR 80 TOWER TUBE & ANGLE BRACES
ENG. FILE:
DRAWING NO.: C961161

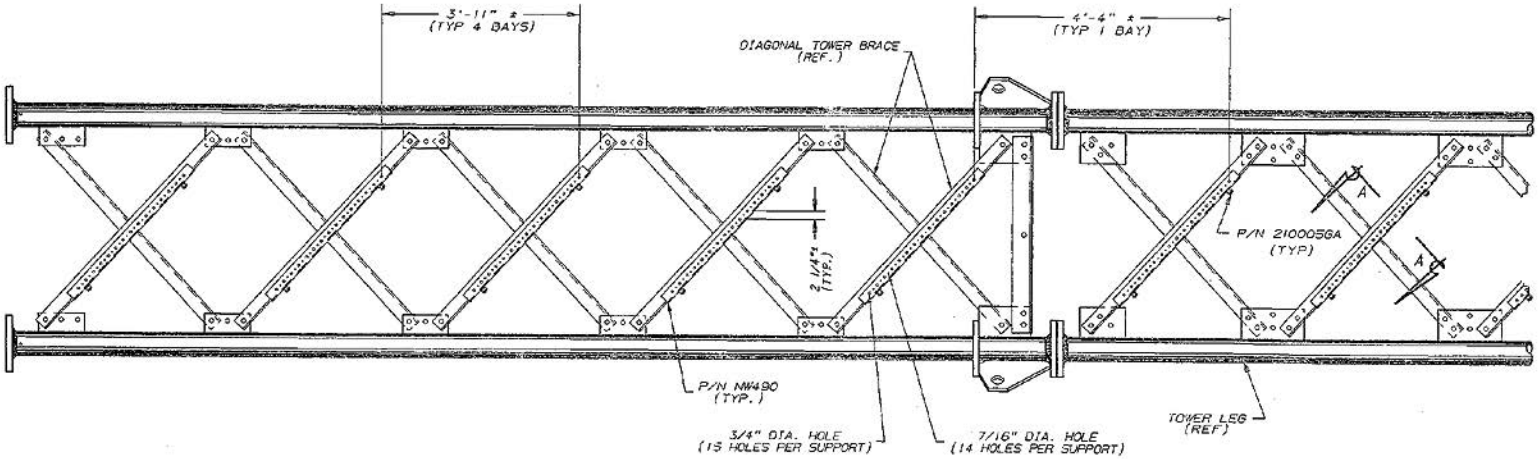

W/G LADDER ORDERING & MOUNTING INFORMATION

ORDER ONE (1) ASSEMBLY P/N WAF901521 FOR EACH DIAGONAL BRACE BAY THAT W/G'S CROSS IN A SECTION (i.e. 5-WAF901521 FOR A 20' TOWER SECTION, 3-WAF901521 FOR A 12' TOWER SECTION, ETC.)
THIS ASSEMBLY MAY BE MOUNTED ON OUTSIDE OF TOWER AS SHOWN OR ON INSIDE AS REQUIRED

NOTE: THIS ASSEMBLY IS NOT RECOMMENDED FOR USE WITH CIRCULAR W/G

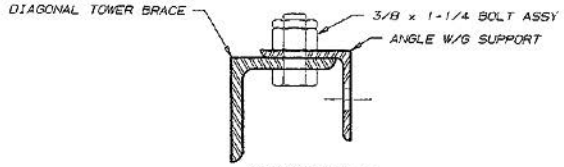

SECTION A-A

ASSEMBLY P/N WAF901521 BILL OF MATERIAL

ITEM	QTY	PART NO.	DESCRIPTION	DWG NO.
1	1	NW490	ANGLE W/G SUPPORT	B900955
2	2	210005GA	3/8 x 1-1/4 BOLT ASSY	C770404

No.	Revision Description	Date	Rev By	Ckd By	Appd By
R2	REPLACED NW485 WITH NW490	6/8/95	WMN	EJT	TS
R1	REVERSED TOWER BRACING	5/8/90	CSR	WDU	TS

ROHN

Scale: NONE	By	Date
Drawn:	CSR	2/15/90
Checked:	WDU	2/19/90
App. Eng.:	TS	2/19/90
App. Sales:	JC	2/19/90

Title: BRACE MOUNTED W/G SUPPORT ASSEMBLY FOR MODEL 90 TOWER (15 HOLES - 2-1/4" O.C.)

ENG. FILE:

DRAWING NO.: C900802R2

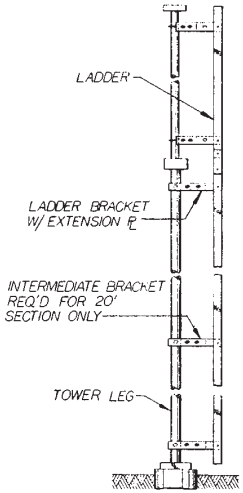

LADDER ELEVATION
SIDE VIEW

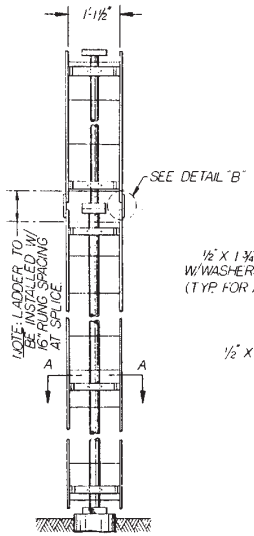

LADDER ELEVATION
FRONT VIEW

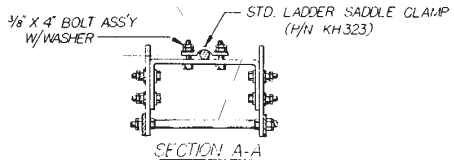

SECTION A-A
(VIEW NO. 1)
FOR: 1 5/16" THRU 3" O.D. LEGS

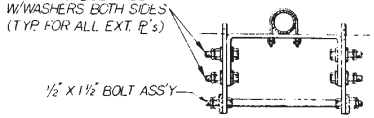

SECTION A-A
(VIEW NO. 2)
FOR: 3" AND 3½" PIPE
4" PIPE
5" PIPE, TOP AND INTERMEDIATE BRACKET
6" PIPE, TOP AND INTERMEDIATE BRACKET
8" PIPE, TOP BRACKET

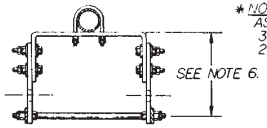

SECTION A-A
(VIEW NO. 3)
FOR: 5" PIPE, BOTTOM BRACKET
6" PIPE, BOTTOM BRACKET
8" PIPE, INTERMEDIATE AND BOTTOM BRACKET

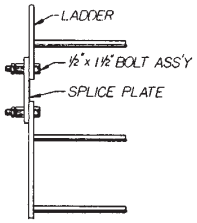

DETAIL "B"
SPLICE DETAILS

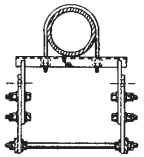

SECTION A-A
(VIEW NO. 4)
FOR: 10" PIPE

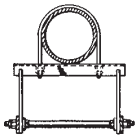

SECTION A-A
(VIEW NO. 5)
FOR: 12" PIPE

BILL OF MATERIAL

	ITEM	QUAN.	PART NO.	DESCRIPTION	DWG. NO.
P/N NL20A 1-20' SECTION	1	1	NL20	LADDER - 20' LONG	SK680905
	2	REF	SEE CHART	LADDER BRACKET HARDWARE KIT	SEE CHART
	3	2	KY95	SPLICE PLATE	SK680905
	4	10	210018GA	1/2" X 1-1/2" BOLT ASS'Y	C770404
	5	12	210019GAW	1/2" X 1-3/4" BOLT ASS'Y W/WASHER	C770404
	6	18	2500116	1/2" FLAT WASHER	SK680905
P/N NL10A 1-10' SECTION	1	1	NL10	LADDER - 10' LONG	SK680905
	2	REF	SEE CHART	LADDER BRACKET HARDWARE KIT	SEE CHART
	3	2	KY95	SPLICE PLATE	SK680905
	4	8	210018GA	1/2" X 1-1/2" BOLT ASS'Y	C770404
	5	8	210019GAW	1/2" X 1-3/4" BOLT ASS'Y W/WASHER	C770404
	6	12	2500116	1/2" FLAT WASHER	SK680905

LEG	LADDER BRACKET ASS'Y P/N	BRACKET PT. NO. 1 REQ'D	SADDLE CLAMP 1 REQ'D	U-BOLT - 1 REQ'D PER BRACKET	BOLT SIZE 2 REQ'D/BRACKET (P/N 210013GAW)	LADDER EXT. PLATE P/N KY599 QTY	SECTION A-A VIEW NO.	BRACKET FAB. DWG. NO.
BAR 1 5/16"Ø	KY615	KY605	KH323	—	3/8"X4" W/WASHER	2	1	SK680905
BAR 1¼"Ø	KY615	KY605	KH323	—	3/8"X4" W/WASHER	2	1	SK680905
BAR 1 7/16"Ø	KY615	KY605	KH323	—	3/8"X4" W/WASHER	2	1	SK680905
2" PIPE	KY615	KY605	KH323	—	3/8"X4" W/WASHER	2	1	SK680905
2¼" TUBE	KY615	KY605	KH323	—	3/8"X4" W/WASHER	2	1	SK680905
2½" PIPE	KY615	KY605	KH323	—	3/8"X4" W/WASHER	2	1	SK680905
3" TUBE	KY615	KY605	KH323	—	3/8"X4" W/WASHER	2	1	SK680905
3" PIPE	KY616	KY605	—	JR64AW	—	2	2	SK680905
3½" PIPE	KY617	KY604	—	JR62AW	—	2	2	SK680905
4" PIPE	KY618	KY604	—	JR63AW	—	2	2	SK680905
5" PIPE	KY619	KY605	—	JR86A	—	2	2 & 3	SK680905
6" PIPE	KY620	KY604	—	JR87A	—	2	2 & 3	SK680905
8" PIPE	KY621	KY601	—	JR90SA	—	2	2 & 3	SK680905
10" PIPE	KY622	KY600	—	JR110A	—	2	4	B900309
12" PIPE	KY623	KY543	—	JR120A	—	—	5	B790799

* NOTE: LADDER BRACKET ASSEMBLY
3 REQ'D FOR 20'
2 REQ'D FOR 10'

GENERAL NOTES:

1) ALL DRAWINGS SUBMITTED ARE LATEST REVISIONS.
2) FLAT WASHERS ARE PROVIDED FOR ALL SLOTTED HOLES.
3) LADDERS FOR GUYED TOWERS ARE TO BE ORIENTED SO THAT THE LADDER RUNGS PARALLEL THE TOWER FACE.
4) AN ADDITIONAL 10 FEET OF LADDER IS PROVIDED WITH ALL TOWERS 200' AND OVER. LADDER IS TO BE FIELD CUT TO PROPER LENGTH AFTER INSTALLATION.
5) PAL NUTS ARE PROVIDED WITH ALL BOLTS.
6) THIS DIMENSION MUST BE ADJUSTED TO KEEP THE LADDER SIDE RAIL IN A STRAIGHT LINE AND MAINTAIN 16" ON CENTER RUNG SPACING.
7) IT IS RECOMMENDED A ROHN-LOC SAFETY DEVICE BE PROVIDED WITH LADDER INSTALLATIONS FOR ADDED CLIMBER SAFETY.

No.	Revision Description	Date	By
R2	ADDED NOTE 7	1-30-85	GL
R1	REMOVED ½" FLAT WASHER; NL20A HAD 24 2500114, NL10A HAD 16 2500114	5-21-83	RKB

Unarco-Rohn
Division of Unarco Industries, Inc.

Title: LEG MOUNTED STANDARD LADDER ASSEMBLY

Scale: NONE
Drawn by: AJG 5/19/80
Checked by: MDJ 5-21-80
Approved by Engineering: 6-3-80
Approved by Production
Approved by Sales: JC 6-3-80

Unless otherwise specified, dimensions are given in inches.
Tolerances: Decimals ± ; Fractions ± ; Angles ±
Material: Finish: Weight:

This drawing is the property of Unarco-Rohn. It is not to be copied, used, or treated in whole or in part without our written consent.
File Number:
Drawing Number: D800041 R2

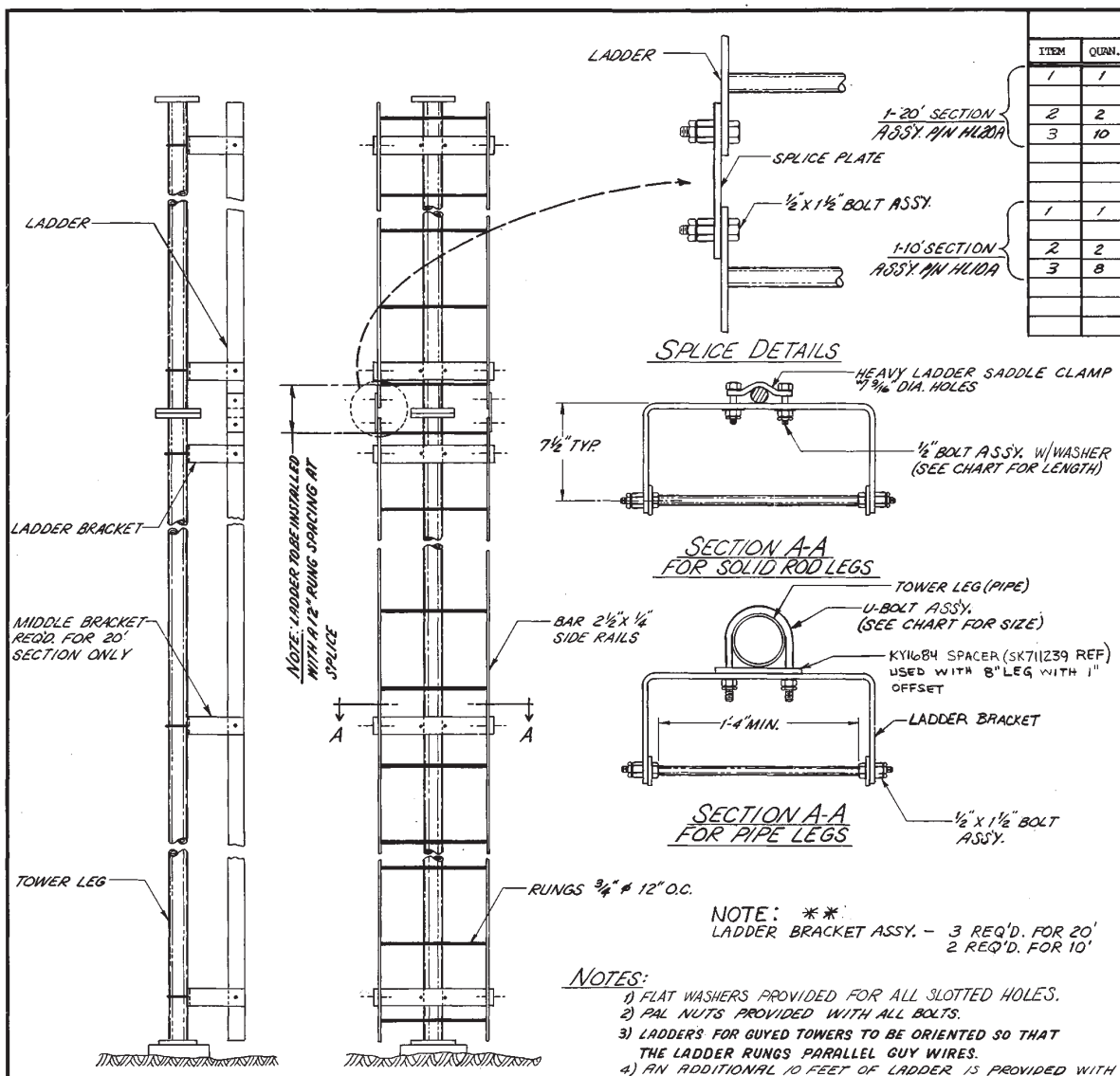

BILL OF MATERIAL

ITEM	QUAN.	PART NO.	DESCRIPTION	DWG. NO.
1	1	HL 162 A	LADDER 20'LG.	SK 711239
2	2	KY 96	HEAVY LADDER SPLICE PLATE	SK 711239
3	10	2100186A	½"x1½ BOLT ASS'Y	C770404
1	1	HL 161 A	LADDER 10'LG.	SK 711239
2	2	KY 96	HEAVY LADDER SPLICE PLATE	SK 711239
3	8	2100186A	½"x1½ BOLT ASS'Y	C770404

1-20' SECTION ASSY. P/N HL20A

1-10' SECTION ASSY. P/N HL10A

NOTE: WHEN ORDERING LADDER YOU MUST ORDER REQ'D. QUANTITY OF LADDER MAT'L. PLUS MOUNTING BRACKETRY TO MATCH TOWER LEG SIZE.

LEG SIZE	BRACKET PT. NO. (SK711239)	U-BOLT 1 REQ'D. PER BRACKET	BOLT SIZE w/WASHER, 2 REQ'D. PER BRACKET	LADDER BRACKET ASSEMBLY PART NO. **
BAR 1 5/16" ϕ	KY 71 *	—	½"x2"-2100206AW	KY 902
BAR 1¼" ϕ	KY 71 *	—	½"x2¼"-2100216AW	KY 903
BAR 1 7/16" ϕ	KY 71 *	—	½"x2½"-2101176AW	KY 904
2" PIPE	KY 72	JR 83AW	—	KY 905
2¼" TUBE	KY 72	JR 83AW	—	KY 905
2½" PIPE	KY 71	JR 84AW	—	KY 906
3" TUBE	KY 71	JR 84AW	—	KY 906
3" PIPE	KY 71	JR 88AW	—	KY 907
3½" PIPE	KY 71	JR 89AW	—	KY 908
4" PIPE	KY 71	JR 85AW	—	KY 909
5" PIPE	KY 73	JR 86A	—	KY 910
6" PIPE	KY 72	JR 87A	—	KY 911
8" PIPE	KY 73	JR 90SA	—	KY 912
10" PIPE	KY1681	JR110A	—	KY1682
12" PIPE	KY2037	JR120A	—	KY2038A

* 1 LADDER SADDLE CLAMP REQ'D PER BRACKET

NOTE: ** LADDER BRACKET ASSY. – 3 REQ'D. FOR 20'
2 REQ'D. FOR 10'

NOTES:
1) FLAT WASHERS PROVIDED FOR ALL SLOTTED HOLES.
2) PAL NUTS PROVIDED WITH ALL BOLTS.
3) LADDERS FOR GUYED TOWERS TO BE ORIENTED SO THAT THE LADDER RUNGS PARALLEL GUY WIRES.
4) AN ADDITIONAL 10 FEET OF LADDER IS PROVIDED WITH ALL TOWERS 200' & OVER. LADDER TO BE FIELD CUT TO PROPER LENGTH AFTER ASS'Y.
5) U-BOLT PART NO. IDENTIFICATION:
JR84 – – –½" U-BOLT ONLY
JR84A – – ½" U-BOLT W/NUTS & PAL NUTS
JR84AW – ½" U-BOLT W/NUTS, PAL NUTS & WASHERS
JR110A – 1/2" U BOLT W/NUTS AND PAL NUTS

NOTE: IT IS RECOMMENDED A ROHN-LOC SAFETY DEVICE BE PROVIDED WITH LADDER INSTALLATIONS FOR ADDED CLIMBER SAFETY.

R15	ADD P/N KY1682, KY1684	11-20-90	WEB	R12	REMOVED ½" FLAT WASHERS 2500116	5-25-83	RKB	R10	ADDED ASSY P/N'S & NOTE	5-14-81	RM	R8	REVISE NOTE 4
R14	P/N 2101176AW WAS 2100246AW	12-15-89	FHT	R11	ADDED LAD. BKT. ASSY. P/N & NOTE	12-15-81	WMN	R9	ADDED PT. NO. BOLT ASSY & WASH	2-23-79	DRL	R7	ADD NOTE 4
R13	ADDED ROHN LOC NOTE	1-30-85	GLJ									R6	ADDED RUNG SPACING NOTE & REVISED SPLICE R
												R5	REVISED MK. NO'S
												R4	REDRAWN

NO.	DESCRIPTION	DATE	BY
	REVISIONS		

ROHN®

TITLE: LADDER ASSY LEG HEAVY-DUTY

FILE NO.

SCALE: NONE | MATERIAL | FINISH | WT.

DWN. BY: 4-30-74 | CK'D BY: 5-1-74 | APP'D BY: 5-1-74 | APP'D BY: 5-1-74

UNLESS OTHERWISE SPECIFIED, DIMENSIONS ARE GIVEN IN INCHES. TOLERANCES: DEC. ± FRAC. ± ANGLES ±

DWG. NO. C730108 R16

R16 ADD. P/N KY2038A 6-16-94 WMN

GAF 880-250 2-72 48194

PRINTED IN U.S.A.

BILL OF MATERIAL

QUAN.*	PART NO.	DESCRIPTION	DWG. NO.
		20' SECTION ASS'Y. NO. HL20FT	
1	HL 162A	LADDER SECTION	SK 711239
2	KY 96	LADDER SPLICE PLATES	SK 711239
8	KH 91	NO. 25 WINCH SADDLE CLAMP	B770214
4	210018GA	1/2 X 1 1/2 BOLT ASS'Y.	C770404
16	J51A	J-BOLT ASS'Y.	B29 47
		10' SECTION ASS'Y. NO. HL10FT	
1	HL 161A	LADDER SECTION	SK 711239
2	KY 96	LADDER SPLICE PLATE	SK 711239
4	KH 91	NO. 25 WINCH SADDLE CLAMP	B770214
4	210018GA	1/2 X 1 1/2 BOLT ASS'Y.	C770404
8	J51A	J-BOLT ASS'Y.	B29 47

NOTES:

1. LADDER CAN BE MOUNTED INSIDE OR OUTSIDE OF TOWER AS REQUIRED.
2. * QUANTITIES LISTED ARE FOR ONE LADDER SECTION ONLY.
3. SPACE CLAMPS & CLIPS AS SHOWN.

ANGULAR BRACING MOUNTING HARDWARE CHART

CLIP ASS'Y. P/N**	BRACE SIZE	LADDER CLIP (2 REQ'D)		J-BOLT (2 REQ'D)	
		PT. NO.	DWG. NO.	PT. NO.	DWG. NO.
KY695	L 1 1/2"	H173	B820993	J51A	B29 47
KY695	L 1 3/4"	H173	B820993	J51A	B29 47
KY695	L 2"	H173	B820993	J51A	B29 47
KY832	L 2 1/2"	H173	B820993	J107A	B29 108
KY833	L 3"	H174	B820993	J107A	B29 108

** 4 REQUIRED FOR 20' SECTION; 2 REQUIRED FOR 10' SECTION

BILL OF MATERIAL

QUAN.*	PART NO.	DESCRIPTION	DWG. NO.
		20' SECTION ASS'Y. NO. HL20FA	
1	HL 162 A	LADDER SECTION	SK 711239
2	KY 96	LADDER SPLICE PLATE	SK 711239
8	SEE CHART	LADDER CLIP	SEE CHART
4	210018GA	1/2 x 1 1/2 BOLT ASS'Y.	C770404
8	SEE CHART	J-BOLT ASS'Y.	SEE CHART
		10' SECTION ASS'Y. NO. HL10FA	
1	HL 161 A	LADDER SECTION	SK 711239
2	KY 96	LADDER SPLICE PLATE	SK 711239
4	SEE CHART	LADDER CLIP	SEE CHART
4	210018GA	1/2 x 1 1/2 BOLT ASS'Y.	C770404
4	SEE CHART	J-BOLT ASS'Y.	SEE CHART

R5 NOTE: AN ADDITIONAL 10 FEET OF LADDER IS PROVIDED WITH ALL TOWERS 200' & OVER. LADDER TO BE FIELD CUT TO PROPER LENGTH AFTER INSTALLATION.

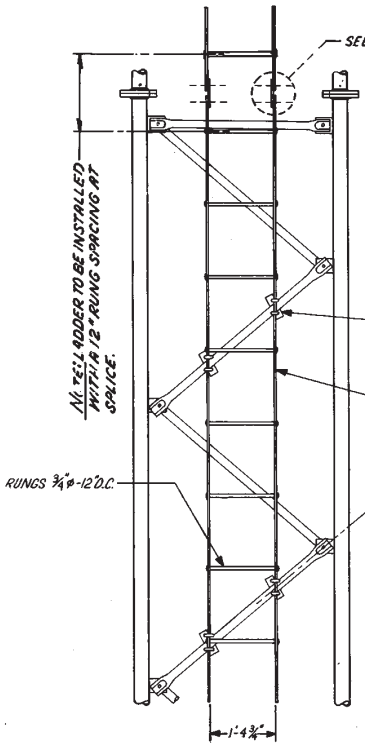

TUBULAR BRACING

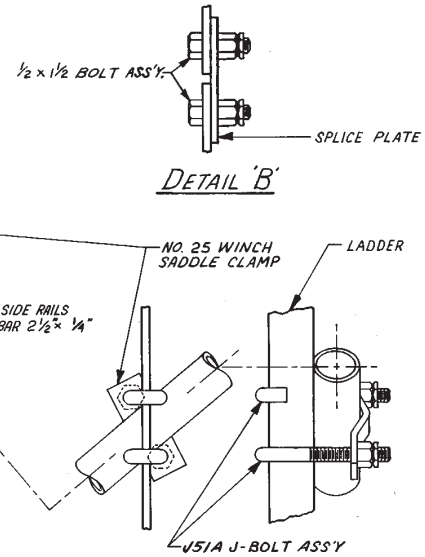

DETAIL 'B'

PROFILE VIEW

NOTE: IT IS RECOMMENDED A ROHN-LOC SAFETY DEVICE BE PROVIDED WITH LADDER INSTALLATIONS FOR ADDED CLIMBER SAFETY.

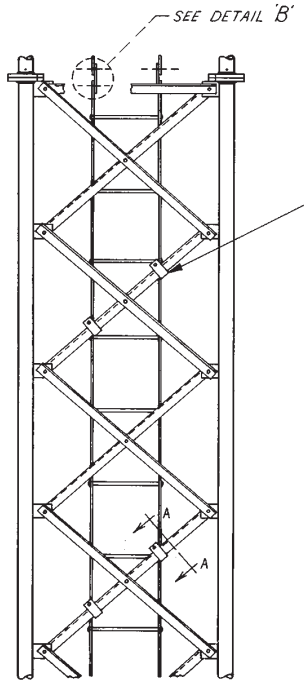

ANGULAR BRACING

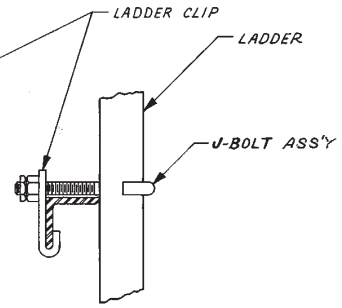

SECTION A-A

NO.	DESCRIPTION	DATE	BY
R5	ADD NOTE	7-1-75	WPL
R4	ADDED RUNG SPACING NOTE & REVISED SPLICE	6-23-75	OH
R3	REVISED & REDRAWN	12-5-74	RDB

REVISIONS

ROHN® MANUFACTURING
DIVISION OF MARMON GROUP

TITLE: FACE MOUNTED HEAVY LADDER ASS'Y FOR GUYED TOWERS

FILE NO.

SCALE NONE	MATERIAL	FINISH	WT.
DWN. BY R.D.B.	DATE 12-5-74	UNLESS OTHERWISE SPECIFIED, DIMENSIONS ARE GIVEN IN INCHES.	
CK'D. BY WPL	DATE 12-17-74	TOLERANCES DEC. ± FRAC. ± ANGLES ±	DWG. NO. C 730607 R11
APP'D. ENG'RG. OH	DATE 12-20-74		
APP'D. SALES BR	DATE 12-26-74		

R9	REMOVED FLAT WASHERS 250011G FROM ASSY P/N'S	5-25-83	RKB
R8	ADDED LADDER & CLIP ASS'Y. P/N'S	4-10-81	JHD
R7	REVISED BILL OF MATERIALS	1-27-78	JHD
R6	REVISE R5 NOTE	1-13-77	WPL
R11	ADDED ROHN-LOC NOTE	1-30-85	GLJ
R10	REV. LAD. CLIP, WERE H57, H56, H80, H119, H84, CHG'D DWG	2-2-84	RKB

GAF 880-250 2-72 48194

PRINTED IN U.S.A.

ROHN™ Products

Self-Supporting Towers

Products for a Growing World of Technology

ROHN™ Products

Self-Supporting Towers

Time Tested Strength and Design

The ROHN SSV Series of Self-Supporting Towers provide an excellent strength to cost ratio proven by years of use. In production over 20 years, the SSV has evolved into a highly efficient and wide ranging system of custom towers produced from pre-engineered sections.

Worldwide Multiple Uses

SSV towers are in use Worldwide for two way communications, microwave, cellular, PCS, public safety, broadcast, STL, surveillance camera mounts, solar power stations, weather stations and even high level lighting of sports stadiums.

Unmatched Attention to Detail

Backed by one of the largest manufacturers of communications towers in the world, ROHN Self-Supporting Towers are produced with unmatched attention to detail. As with all ROHN products, SSV Towers are Hot Dip Galvanized after fabrication to assure years of corrosion free use. In this process each section of the tower is totally immersed in molten zinc, allowing every square inch of the tower, inside and out, to be completely covered. Hot Dip Galvanizing protects all points of welding and construction against rust and corrosion while providing an attractive finish.

SSV Structures are available with a wide variety of pre-designed accessories including platforms, antenna mounts, ladders, lighting accessories, mounts, ice shields and safety climbing devices. Most SSV sections use angle steel cross bracing, with lighter upper sections using a Zig-Zag ® brace pattern. SSV sections can be combined with "K" braced SSMW tower sections for added height and strength when needed.

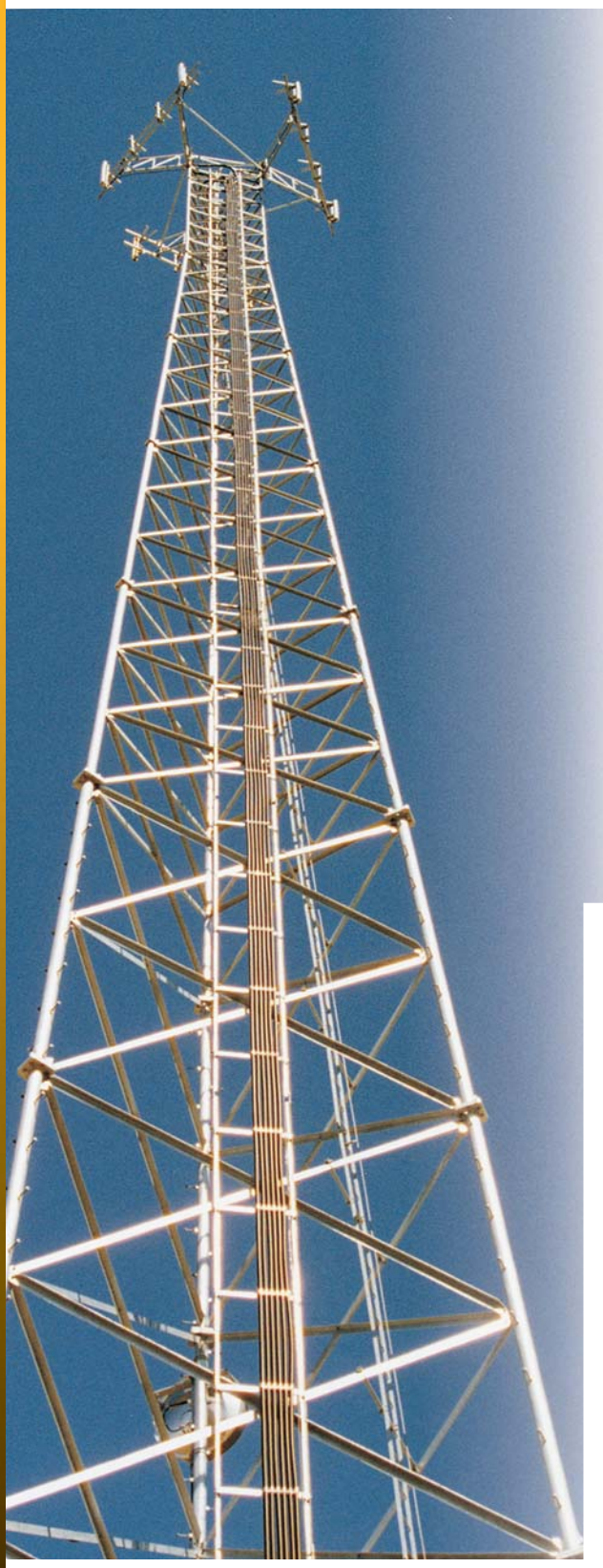

SSV Tower Features:

- Time tested design
- Tubular or solid steel leg design
- For applications to 300 feet
- Custom designs from pre-engineered sections
- Available with a free 20 year warranty
- All parts Hot Dip Galvanized after fabrication

Standard SSV Towers are available for applications not requiring site specific engineering analysis. See inside section for details.

ROHN™ Products

SSV Tower

Products for a Growing World of Technology

Blank

TOWER BASE SECT. NO.	ALLOW. LEG LOAD (POUNDS)	ALLOW. SHEAR (POUNDS PER LEG)	ANCHOR BOLT DATA						PIER AND PAD							MAT		DRILL AND BELL					DRILLED PIER			
			LAYOUT DIMENSIONS			SIZE 12 REQ'D OR SHORT BASE	BOLT CIRCLE DIA. INCHES	PROJ. INCHES	D	A	C	VERT. BARS	HOR. BARS	REQ'D CONC. (CU. YDS. 3 FDNS)		W	REQ'D CONC. (CU. YDS.)	D	X	Y	VERT. BARS	REQ'D CONC. (CU. YDS. 3 FDNS)	D	Y	VERT. BARS	REQ'D. CONC. (CU. YDS. 3 PIERS)
			M	N	R									ROUND	SQUARE											
1W	4,530		1' 2	1' 0 1/8	0' 8 1/16	———	2 21/32									4' 0	2.4									
2W	11,200		1' 6	1' 3 9/16	0' 10 3/8	SB2	2 21/32									5' 6	4.5									
3WN	19,600		1' 10	1' 7 1/16	1' 0 11/16	SB3	3 1/2									6' 9	6.8									
4N	28,000		2' 2	1' 10 1/2	1' 3	SB4	4 1/4									8' 0	9.5									
5N	36,000		2' 6	2' 2	1' 5 5/16	SB5	4 1/4									8' 9	11.3									
6N	33,730		4' 6 1/4	3' 11	2' 7 5/16	5/8X42	4 15/16	3 1/2								10' 3	15.6									
7N	33,730	4,000	6' 6 3/4	5' 8 3/16	3' 9 1/2	5/8X42	4 15/16	3 1/2	8' 0	4' 6	2' 0	8 #6	#6	6.3	6.9	11' 6	19.6									
8N	52,530	6,000	8' 6 3/4	7' 5	4' 11 5/16	5/8X42	4 15/16	3 1/2	8' 9	5' 6	2' 0	8 #7	#6	8.7	9.4	14' 3	30.1	11' 0	4' 6	2' 6	10 #6	7.8	18' 6	2' 6	10 #6	10.4
9N	43,600	7,500	10' 6 3/4	9' 1 3/4	6' 1 3/16	5/8X42	4 15/16	3 1/2	8' 9	5' 6	2' 0	8 #7	#6	8.7	9.4	16' 0	37.9	11' 0	4' 6	2' 6	10 #6	7.8	16' 0	2' 6	10 #6	9.0
10N	43,600	10,000	12' 7 1/4	10' 11	7' 3 5/16	3/4X48	5 21/32	4	8' 9	5' 6	2' 0	8 #7	#6	8.7	9.4	18' 3	49.3	11' 0	4' 6	2' 6	10 #6	7.8	16' 0	2' 6	10 #6	9.0
11N	64,930	10,000	14' 7 7/8	12' 8 5/16	8' 5 9/16	7/8X60	7 1/16	5	10' 0	5' 6	2' 6	8 #8	#6	10.8	12.0			12' 0	5' 0	2' 6	10 #6	9.2	21' 9	2' 6	10 #6	12.2
12N	63,600	10,000	16' 8 3/8	14' 5 1/2	9' 7 11/16	7/8X60	7 1/16	5	10' 0	5' 6	2' 6	8 #8	#6	10.8	12.0			12' 0	5' 0	2' 6	10 #6	9.2	21' 6	2' 6	10 #6	12.0
13N	82,930	10,000	18' 8 3/8	16' 2 5/16	10' 9 9/16	7/8X60	7 1/16	5	11' 0	5' 6	2' 6	10 #8	#6	11.3	12.7			12' 6	5' 6	2' 6	10 #6	10.5	22' 0	3' 0	12 #6	17.7
14N	82,930	10,000	20' 9 3/8	17' 11 15/16	12' 0	1X78	9 1/2	5 1/2	11' 0	5' 6	2' 6	10 #8	#6	11.3	12.7			12' 6	5' 6	2' 6	10 #6	10.5	22' 0	3' 0	12 #6	17.7
15N	129,330	15,000	22' 9 3/8	19' 8 3/4	13' 1 13/16	1X78	9 1/2	5 1/2	12' 6	6' 6	3' 0	12 #8	#6	17.3	19.7			14' 0	7' 0	3' 0	12 #7	18.4	27' 6	3' 6	12 #7	30.0
16N	129,330	15,000	24' 9 3/8	21' 5 9/16	14' 3 11/16	1X78	9 1/2	5 1/2	12' 6	6' 6	3' 0	12 #8	#6	17.3	19.7			14' 0	7' 0	3' 0	12 #7	18.4	27' 6	3' 6	12 #7	30.0

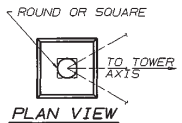

PLAN VIEW

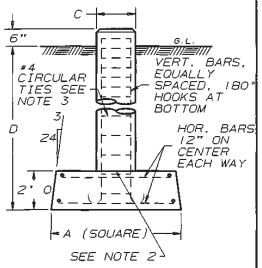

ELEVATION VIEW

PIER AND PAD

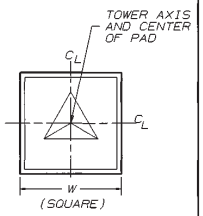

PLAN VIEW

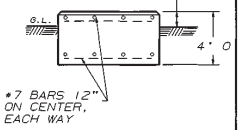

ELEVATION VIEW

MAT

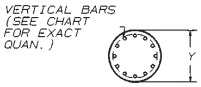

SECTION A-A

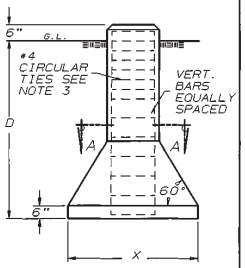

ELEVATION VIEW

DRILL AND BELL

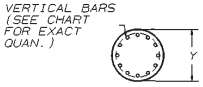

SECTION A-A

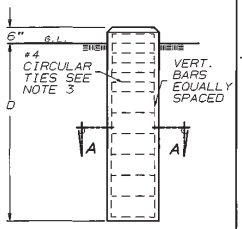

ELEVATION VIEW

DRILLED PIER

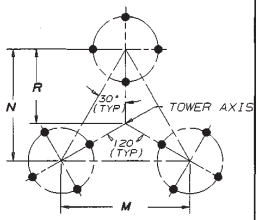

PLAN VIEW 1W THRU 5N

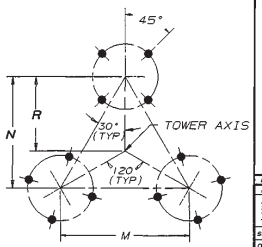

PLAN VIEW 6N THRU 16N

GENERAL NOTES

1. FOR REQUIRED MATERIAL SPECIFICATIONS, INSTALLATION NOTES, AND TOLERANCES SEE DRAWING NUMBER B841300.
2. ROUGHEN CONSTRUCTION JOINT TO A FULL AMPLITUDE OF 1/4 INCH.
3. CIRCULAR TIES TO BE PLACED ON 3 INCH CENTERS FOR TOP 4 FEET AND 12 INCH CENTERS FROM 4 FEET TO BOTTOM, WITH 22 INCH LAPS.
4. FOR ANCHOR BOLT SETTING TEMPLATE INFORMATION AND BASE DETAILS SEE DRAWING NUMBER CU730104.

No.	Revision Description	Date	Rev By	Chk By	Appd By
R1	REV'D GEN. NOTE NO.3	3-14-94	RKB	LJ-AL	XK

ROHN

Scale: NONE	By	Date
Drawn:	WDU	9-11-87
Checked:	GPW	3-3-88
App. Eng.:	XK	3-4-88
App. Sales:	AE	3-4-88

Title: STANDARD FOUNDATIONS MODEL SSV TOWERS N SERIES

ENG. FILE:

DRAWING NO.: D870480 R1

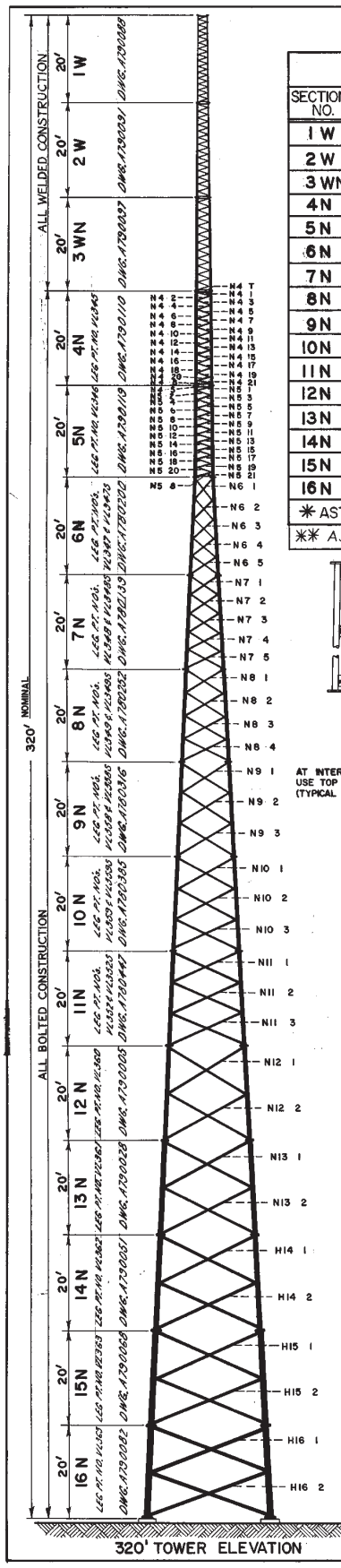

320' TOWER ELEVATION

TOWER SCHEDULE

SECTION NO.	SPREAD DIMENSION UPPER	SPREAD DIMENSION LOWER	TOWER LEGS 50 KSI YIELD STR.	TOWER BRACES MIN. 33 KSI YIELD STR.	FLANGE PLATES TOP	FLANGE PLATES BOTTOM	FLANGE BOLTS **	BRACE BOLTS **
1 W	1'-2"	1'-2"	9/16" Ø SOLID	3/8" Ø SOLID	3 X 3 X 3/8 2 21/32" B.C.	3 X 3 X 3/8 2 21/32" B.C.	12-3/8 X 1 1/2"	NONE
2 W	1'-2"	1'-6"	3/4" Ø SOLID	3/8" Ø SOLID	3 X 3 X 3/8 2 21/32" B.C.	3 X 3 X 3/8 2 21/32" B.C.	12-3/8 X 1 1/2"	NONE
3 WN	1'-6"	1'-10"	15/16" Ø SOLID	7/16" Ø SOLID	3 X 3 X 3/8 2 21/32" B.C.	4 X 4 X 1/2 3 1/2" B.C.	12-1/2 X 2"	NONE
4 N	1'-10"	2'-2"	1 1/4" Ø SOLID	5/8" Ø SOLID	4 X 4 X 1/2 3 1/2" B.C.	4 1/2 X 4 1/2 X 5/8 4 1/4" B.C.	12-5/8 X 2 1/4"	72-3/8 X 1 1/2"
5 N	2'-2"	2'-6"	1 7/16" Ø SOLID	5/8" Ø SOLID	4 1/2 X 4 1/2 5/8 4 1/4" B.C.	4 1/2 X 4 1/2 X 5/8 4 1/4" B.C.	12-5/8 X 2 1/4"	72-3/8 X 1 1/2"
6 N	2'-6"	4'-6 1/4"	2" Ø PIPE	∠ 1 1/2 x 1 1/2 x 1/8	4 1/2 X 4 1/2 X 5/8 4 1/4" B.C.	5 X 5 X 3/4 4 15/16" B.C.	12-5/8 X 2 1/2"	75-1/2 X 1 1/4"
7 N	4'-6 1/4"	6'-6 3/4"	2" Ø PIPE	∠ 1 1/2 x 1 1/2 x 1/8	5 X 5 X 3/4 4 15/16" B.C.	5 X 5 X 3/4 4 15/16" B.C. *	12-5/8 X 2 1/2"	75-1/2 X 1 1/4"
8 N	6'-6 3/4"	8'-6 3/4"	2 1/2" Ø PIPE	∠ 1 1/2 x 1 1/2 x 1/8	5 X 5 X 3/4 4 15/16" B.C.	5 X 5 X 3/4 4 15/16" B.C.	12-5/8 X 2 1/2"	60-1/2 X 1 1/4"
9 N	8'-6 3/4"	10'-6 3/4"	2 1/2" Ø PIPE	∠ 1 3/4 x 1 3/4 x 1/8	5 X 5 X 3/4 4 15/16" B.C.	5 X 5 X 3/4 4 15/16" B.C.	12-5/8 X 2 1/2"	45-1/2 X 1 1/4"
10 N	10'-6 3/4"	12'-7 1/4"	2 1/2" Ø PIPE	∠ 2 x 2 x 1/8	5 X 5 X 3/4 4 15/16" B.C.	6 X 6 X 3/4 5 21/32" B.C. *	12-3/4 X 2 3/4"	45-1/2 X 1 1/4"
11 N	12'-7 1/4"	14'-7 7/8"	3" Ø PIPE	∠ 2 1/2 x 2 1/2 x 3/16	6 X 6 X 3/4 5 21/32" B.C.	7 X 7 X 1 7 1/16" B.C. *	12-7/8 X 3 1/2"	45-1/2 X 1 1/4"
12 N	14'-7 7/8"	16'-8 3/8"	3 1/2" Ø PIPE	∠ 3 x 3 x 3/16	7 X 7 X 1 7 1/16" B.C.	7 X 7 X 1 7 1/16" B.C. *	12-7/8 X 3 1/2"	30-5/8 X 1 1/2"
13 N	16'-8 3/8"	18'-8 3/8"	4" Ø PIPE	∠ 3 x 3 x 3/16	7 X 7 X 1 7 1/16" B.C.	7 X 7 X 1 7 1/16" B.C.	12-7/8 X 3 1/2"	30-5/8 X 1 1/2"
14 N	18'-8 3/8"	20'-9 3/8"	4" Ø PIPE	∠ 3 1/2 x 3 1/2 x 1/4	7 X 7 X 1 7 1/16" B.C.	9 1/2 X 9 1/2 X 1 1/4 9 1/2" B.C. *	12-1 X 4 1/4"	30-5/8 X 1 3/4"
15 N	20'-9 3/8"	22'-9 3/8"	5" Ø PIPE	∠ 4 x 4 x 1/4	9 1/2 X 9 1/2 X 1 1/4 9 1/2" B.C.	9 1/2 X 9 1/2 X 1 1/4 9 1/2" B.C.	12-1 X 4 1/4"	30-5/8 X 1 3/4"
16 N	22'-9 3/8"	24'-9 3/8"	5" Ø PIPE	∠ 4 x 4 x 1/4	9 1/2 X 9 1/2 X 1 1/4 9 1/2" B.C.	9 1/2 X 9 1/2 X 1 1/4 9 1/2" B.C.	12-1 X 4 1/4"	30-5/8 X 1 3/4"

* ASTERISK INDICATES THAT THE BOTTOM FLANGE PL. OF THAT SECTION IS OFFSET.

** A325 (3/8" DIA. BOLTS S.A.E. GRADE 5)

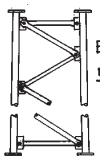

BRACING DETAILS FOR SECTIONS 4N & 5N

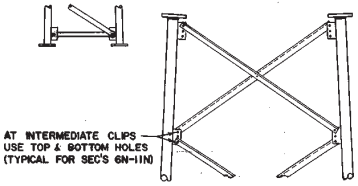

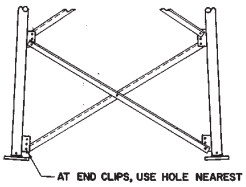

BRACING DETAIL FOR SECTIONS 6N-11N

WEIGHTS

SEC. NO.	LEGS	BRACES	TOTAL
1 W			116
2 W			160
3 WN			230
4 N	260	175	435
5 N	345	195	540
6 N	290	190	480
7 N	300	245	545
8 N	426	274	700
9 N	420	300	720
10 N	430	400	830
11 N	570	840	1,410
12 N	690	825	1,515
13 N	790	910	1,700
14 N	845	1,625	2,470
15 N	1,155	2,000	3,155
16 N	1,155	2,150	3,305

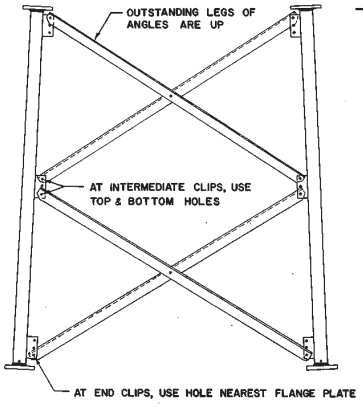

BRACING DETAIL FOR SECTIONS 12N-16N

GENERAL NOTES:

1. LEG PART NO. IS STAMPED AT THE BOTTOM OF EACH LEG OF EACH BOLTED SECTION; SECTION NO. IS STAMPED AT BOTTOM OF ONE LEG OF EACH WELDED SECTION.
2. ALL PART NO'S METAL STAMPED BEFORE GALVANIZING.
3. PAL NUTS PROVIDED FOR ALL TOWER BOLTS, SEE DWG. A790135.
4. STEP BOLTS PROVIDED ON ONE LEG FOR SECTIONS 6N THRU 11N, AND STEP BOLTS ON 3 LEGS FOR SECTIONS 12N THRU 16N.
5. ALL TOWER MEMBERS ARE HOT-DIPPED GALVANIZED AFTER FABRICATION.
6. SEE DWG. D870480 FOR FOUNDATION DETAILS.

NO.	DESCRIPTION	DATE	BY
R10	FLANGE THICKNESS IN 5N - 1/2" TO 5/8"	12-29-93	[illegible]
R9	ADDED A325 & REV. NOTES.	3-22-88	[illegible]
R8	REV. 2-PIECE BRACING TO 1-PIECE.	8-27-85	JMD
R7	REVISED 14N BRACING & BOLT QTY'S	2-6-85	GLJ
R6	ADD SECTION ASSY. DWG. A.D.S.	3/16/81	[illegible]
R5	REVISE: GEN. NOTE NO. 1. ADD LEG PT. NOS.	4/12/79	GLS
R4	CHANGED 14N, 15N, & 16N BRACE MAT'L. & WT'S	12-10-73	JER
R3	FLANGE BOLTS IN SEC. 4N WERE 2 1/4" LG.	2/3/72	GLS
R2	SECT. 3WN WAS 3W	7/6/71	GWA
R1	SECTIONS 4W & 5W REPL. BY 4N & 5N	5/5/71	GWA

REVISIONS

Unarco-Rohn
Division of UNR Industries, Inc.

TITLE: MODEL SSV TOWER
STANDARD SERIES

FILE NO.

SCALE NONE | MATERIAL | FINISH | WT.

DRAWN HA & DR 8-1-69 | UNLESS OTHERWISE SPECIFIED DIMENSIONS ARE GIVEN IN INCHES | TOLERANCES SEC. FRAC. ANGLES

DWG. NO. E 690800

ALL CHANGES RECORDED HERE

TOWER BASE SECT. NO.	ALLOW. LEG LOAD (POUNDS)	ALLOW. SHEAR (POUNDS PER LEG)	ANCHOR BOLT DATA						PIER AND PAD							MAT		DRILL AND BELL					DRILLED PIER			
			LAYOUT DIMENSIONS			SIZE 12 REQ'D OR SHORT BASE	BOLT CIRCLE DIA. INCHES	PROJ. INCHES	D	A	C	VERT. BARS	HOR. BARS	REQ'D CONC. (CU. YDS. 3 FDNS)		W	REQ'D CONC. (CU. YDS.)	D	X	Y	VERT. BARS	REQ'D CONC. (CU. YDS. 3 FDNS)	D	Y	VERT. BARS	REQ'D. CONC. (CU. YDS. 3 PIERS)
			M	N	R									ROUND	SQUARE											
1W	4,530		1' 2	1' 0 1/8	0' 8 1/16	——	2 21/32									4' 0	2.4									
2W	11,200		1' 6	1' 3 9/16	0' 10 3/8	SB2	2 21/32									5' 6	4.5									
3WN	19,600		1' 10	1' 7 1/16	1' 0 11/16	SB3	3 1/2									6' 9	6.8									
4N	28,000		2' 2	1' 10 1/2	1' 3	SB4	4 1/4									8' 0	9.5									
5N	36,000		2' 6	2' 2	1' 5 5/16	SB5	4 1/4									8' 9	11.3									
6N	33,730		4' 6 1/4	3' 11	2' 7 5/16	5/8X42	4 15/16	3 1/2								10' 3	15.6									
7N	33,730	4,000	6' 6 3/4	5' 8 3/16	3' 9 1/2	5/8X42	4 15/16	3 1/2	8' 0	4' 6	2' 0	8 #6	#6	6.3	6.9	11' 6	19.6									
8N	52,530	6,000	8' 6 3/4	7' 5	4' 11 5/16	5/8X42	4 15/16	3 1/2	8' 9	5' 6	2' 0	8 #7	#6	8.7	9.4	14' 3	30.1	11' 0	4' 6	2' 6	10 #6	7.8	18' 6	2' 6	10 #6	10.4
9NH	54,000	6,500	10' 6 3/4	9' 1 3/4	6' 1 3/16	5/8X42	4 15/16	3 1/2	9' 0	5' 6	2' 0	8 #7	#6	8.8	9.5	16' 0	37.9	11' 0	5' 0	2' 6	10 #6	8.7	19' 6	2' 6	10 #6	10.9
10NH	56,000	8,000	12' 7 1/4	10' 11	7' 3 5/16	3/4X48	5 21/32	4	9' 0	5' 6	2' 0	8 #7	#6	8.8	9.5	18' 3	49.3	11' 0	5' 0	2' 6	10 #6	8.7	19' 6	2' 6	10 #6	10.9
11N	64,930	10,000	14' 7 7/8	12' 8 5/16	8' 5 9/16	7/8X60	7 1/16	5	10' 0	5' 6	2' 6	8 #8	#6	10.8	12.0			12' 0	5' 0	2' 6	10 #6	9.2	21' 9	2' 6	10 #6	12.2
12NH	85,600	10,000	16' 8 3/8	14' 5 1/2	9' 7 11/16	7/8X60	7 1/16	5	11' 0	5' 6	2' 6	10 #8	#6	11.3	12.7			12' 6	6' 0	2' 6	10 #6	11.8	22' 9	3' 0	12 #6	18.3
13NH	114,100	12,500	18' 8 3/8	16' 2 5/16	10' 9 9/16	7/8X60	7 1/16	5	12' 0	6' 3	3' 0	12 #8	#6	16.3	18.5			14' 0	6' 6	3' 0	10 #7	16.7	25' 0	3' 6	12 #7	27.3
14NH	114,100	15,000	20' 9 3/8	17' 11 15/16	12' 0	1X78	9 1/2	5 1/2	12' 0	6' 3	3' 0	12 #8	#6	16.3	18.5			14' 0	6' 6	3' 0	10 #7	16.7	25' 0	3' 6	12 #7	27.3
15NH	152,000	15,000	22' 9 3/8	19' 8 3/4	13' 1 13/16	1X78	9 1/2	5 1/2	13' 0	7' 3	3' 0	12 #8	#6	19.9	22.4			15' 0	7' 3	3' 0	12 #8	20.1	30' 0	4' 0	12 #8	42.6
16NH	152,000	15,000	24' 9 3/8	21' 5 9/16	14' 3 11/16	1X78	9 1/2	5 1/2	13' 0	7' 3	3' 0	12 #8	#6	19.9	22.4			15' 0	7' 3	3' 0	12 #8	20.1	30' 0	4' 0	12 #8	42.6

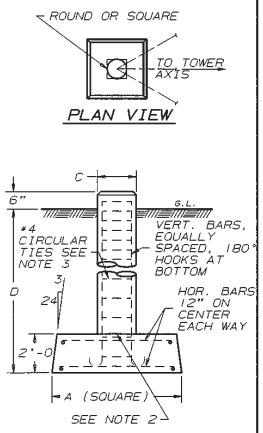

ELEVATION VIEW

PIER AND PAD

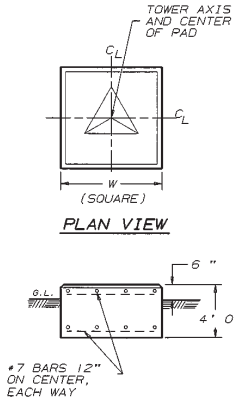

ELEVATION VIEW

MAT

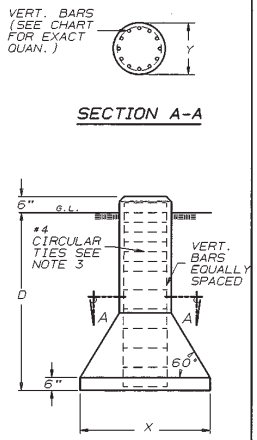

ELEVATION VIEW

DRILL AND BELL

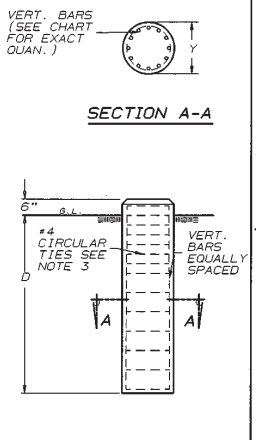

ELEVATION VIEW

DRILLED PIER

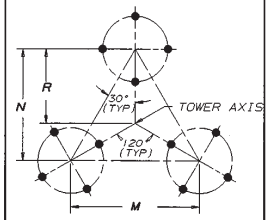

PLAN VIEW 1W THRU 5N

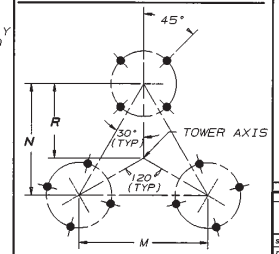

PLAN VIEW 6N THRU 16NH

GENERAL NOTES

1. FOR REQUIRED MATERIAL SPECIFICATIONS, INSTALLATION NOTES, AND TOLERANCES SEE DRAWING NUMBER B841300.
2. ROUGHEN CONSTRUCTION JOINT TO A FULL AMPLITUDE OF 1/4 INCH.
3. CIRCULAR TIES TO BE PLACED ON 3 INCH CENTERS FOR TOP 4 FEET AND 12 INCH CENTERS FROM 4 FEET TO BOTTOM, WITH 22 INCH LAPS.
4. FOR ANCHOR BOLT SETTING TEMPLATE INFORMATION AND BASE DETAILS SEE DRAWING NUMBER CU730104.

No.	Revision Description	Date	Rev By	Chd By	Appd By
R1	REV'D GEN NOTE NO. 3	3-14-94	RKB	GPW	XK

ROHN

Scale: NONE	By	Date	Title:
Drawn:	WDU	9-11-87	STANDARD FOUNDATIONS MODEL SSV TOWERS NH SERIES
Checked:	GPW	3-4-88	
App. Eng.:	XK	3-4-88	
App. Sales:	AE	3-4-88	ENG. FILE: DRAWING NO.: D870483 R1

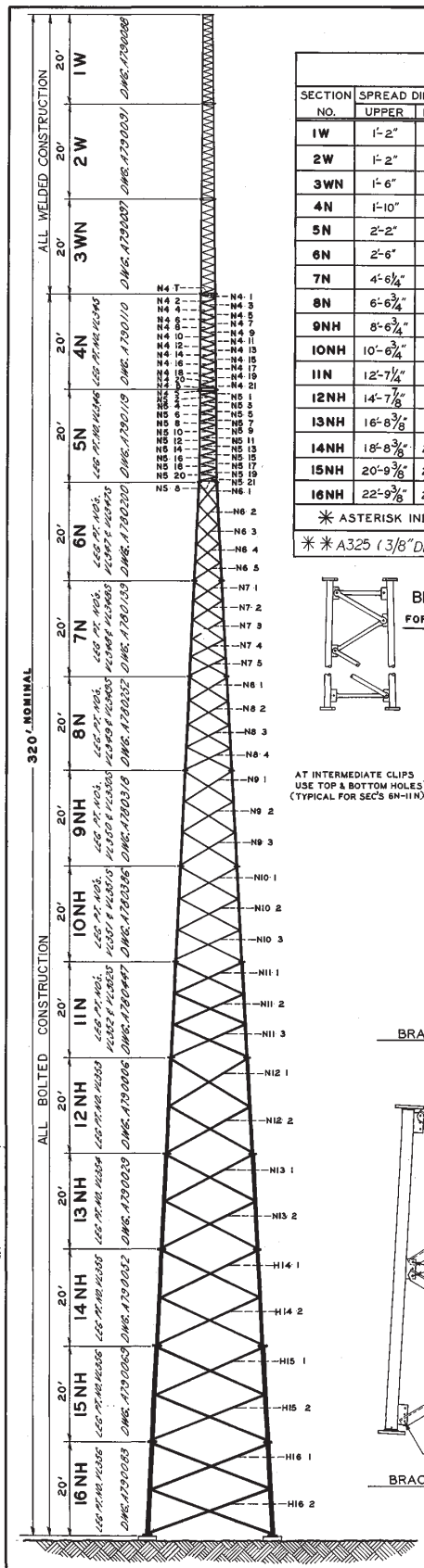

320' TOWER ELEVATION

TOWER SCHEDULE

SECTION NO.	SPREAD DIMENSION UPPER	SPREAD DIMENSION LOWER	TOWER LEGS 50 KSI YIELD STR.	TOWER BRACES MIN. 33 KSI YIELD STR	FLANGE PLATES TOP	FLANGE PLATES BOTTOM	FLANGE BOLTS ✳✳	BRACE BOLTS ✳✳
1W	1'-2"	1'-2"	9/16"Ø SOLID	3/8"Ø SOLID	3 X 3 X 3/8" 2 21/32" B.C.	3 X 3 X 3/8" 2 21/32" B.C.	12-3/8X1 1/2"	NONE
2W	1'-2"	1'-6"	3/4"Ø SOLID	3/8"Ø SOLID	3 X 3 X 3/8" 2 21/32" B.C.	3 X 3 X 3/8" 2 21/32" B.C.	12-3/8X1 1/2"	NONE
3WN	1'-6"	1'-10"	15/16"Ø SOLID	7/16"Ø SOLID	3 X 3 X 3/8" 2 21/32" B.C.	4 X 4 X 1/2" 3 1/2" B.C.	12-1/2X2"	NONE
4N	1'-10"	2'-2"	1 1/4"Ø SOLID	5/8"Ø SOLID	4 X 4 X 1/2" 3 1/2" B.C.	4 1/2 X 4 1/2 X 5/8" 4 1/4" B.C.	12-5/8X2 1/4"	72-3/8X1 1/2
5N	2'-2"	2'-6"	1 7/16" Ø SOLID	5/8"Ø SOLID	4 1/2 X 4 1/2 X 5/8" 4 1/4" B.C.	4 1/2 X 4 1/2 X 5/8" 4 1/4" B.C.	12-5/8X2 1/4"	72-3/8X1 1/2
6N	2'-6"	4'-6 1/4"	2" Ø PIPE	L 1 1/2 X 1 1/2 X 1/8"	4 1/2 X 4 1/2 X 5/8" 4 1/4" B.C.	5 X 5 X 3/4" 4 15/16" B.C.	12-5/8X2 1/2"	75-1/2X1 1/4"
7N	4'-6 1/4"	6'-6 3/4"	2" Ø PIPE	L 1 1/2 X 1 1/2 X 1/8"	5 X 5 X 3/4" 4 15/16" B.C.	5 X 5 X 3/4"✳ 4 15/16" B.C.	12-5/8X2 1/2"	75-1/2X1 1/4"
8N	6'-6 3/4"	8'-6 3/4"	2 1/2"Ø PIPE	L 1 1/2 X 1 1/2 X 1/8"	5 X 5 X 3/4" 4 15/16" B.C.	5 X 5 X 3/4" 4 15/16" B.C.	12-5/8X2 1/2"	60-1/2X1 1/4"
9NH	8'-6 3/4"	10'-6 3/4"	2 1/2"EH PIPE	L 1 3/4 X 1 3/4 X 1/8"	5 X 5 X 3/4" 4 15/16" B.C.	5 X 5 X 3/4" 4 15/16" B.C.	12-5/8X2 1/2"	45-1/2X1 1/4"
10NH	10'-6 3/4"	12'-7 1/4"	2 1/2"EH PIPE	L 2 X 2 X 1/8"	5 X 5 X 3/4" 4 15/16" B.C.	6 X 6 X 3/4"✳ 5 21/32" B.C.	12-3/4X2 3/4"	45-1/2X1 1/4"
11N	12'-7 1/4"	14'-7 7/8"	3" Ø PIPE	L 2 1/2 X 2 1/2 X 3/16	6 X 6 X 3/4" 5 21/32" B.C.	7 X 7 X 1"✳ 7 1/16" B.C.	12-7/8X3 1/2"	45-1/2X1 1/4"
12NH	14'-7 7/8"	16'-8 3/8"	3 1/2"EH PIPE	L 3 X 3 X 3/16	7 X 7 X 1" 7 1/16" B.C.	7 X 7 X 1"✳ 7 1/16" B.C.	12-7/8X3 1/2"	30-5/8X1 1/2"
13NH	16'-8 3/8"	18'-8 3/8"	4" EH PIPE	L 3 X 3 X 3/16	7 X 7 X 1" 7 1/16" B.C.	7 X 7 X 1" 7 1/16" B.C.	12-7/8X3 1/2"	30-5/8X1 1/2"
14NH	18'-8 3/8"	20'-9 3/8"	4" EH PIPE	L 3 1/2 X 3 1/2 X 1/4	7 X 7 X 1" 7 1/16" B.C.	9 1/2 X 9 1/2 X 1 1/4"✳ 9 1/2" B.C.	12-1 X 4 1/4"	30-5/8X1 3/4"
15NH	20'-9 3/8"	22'-9 3/8"	5" EH PIPE	L 4 X 4 X 1/4	9 1/2 X 9 1/2 X 1 1/4" 9 1/2" B.C.	9 1/2 X 9 1/2 X 1 1/4" 9 1/2" B.C.	12-1 X 4 1/4"	30-5/8X1 3/4"
16NH	22'-9 3/8"	24'-9 3/8"	5" EH PIPE	L 4 X 4 X 1/4	9 1/2 X 9 1/2 X 1 1/4" 9 1/2" B.C.	9 1/2 X 9 1/2 X 1 1/4" 9 1/2" B.C.	12-1 X 4 1/4"	30-5/8X1 3/4"

✳ ASTERISK INDICATES THAT THE BOTTOM FLANGE ℞ OF THAT SECTION IS OFFSET

✳✳ A325 (3/8" DIA. BOLTS S.A.E. GRADE 5)

BRACING DETAILS FOR SECTIONS 4N & 5N

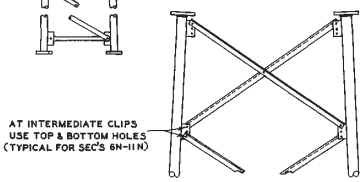

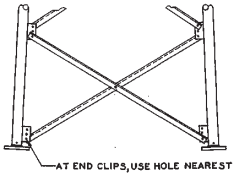

BRACING DETAIL FOR SECTIONS 6N-11N

WEIGHTS

SEC. NO.	LEGS	BRACES	TOTAL
1W	-------	-------	116
2W	-------	-------	160
3WN	-------	-------	230
4N	260	175	435
5N	345	195	540
6N	290	190	480
7N	300	245	545
8N	426	274	700
9NH	535	305	840
10NH	545	400	945
11N	570	840	1410
12NH	905	825	1730
13NH	1050	910	1960
14NH	1110	1625	2735
15NH	1530	2000	3530
16NH	1530	2150	3680

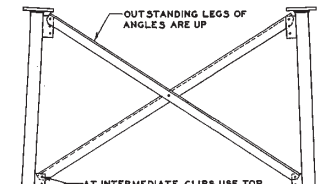

BRACING DETAIL FOR SECTIONS 12NH-16NH

GENERAL NOTES:

1. LEG PART NO. IS STAMPED AT THE BOTTOM OF EACH LEG OF EACH BOLTED SECTION. SECTION NO. IS STAMPED AT BOTTOM OF ONE LEG OF EACH WELDED SECTION.
2. ALL PART NO'S METAL STAMPED BEFORE GALVANIZING.
3. PAL NUTS PROVIDED FOR ALL TOWER BOLTS, SEE DWG. A790135.
4. STEP BOLTS PROVIDED ON ONE LEG FOR SECTIONS 6N THRU 11N, AND STEP BOLTS ON 3 LEGS FOR SECTIONS 12NH THRU 16NH.
5. ALL TOWER MEMBERS ARE HOT-DIPPED GALVANIZED AFTER FABRICATION.
6. SEE DW'G. D670483 FOR FOUNDATION DETAILS.

NO.	DESCRIPTION	DATE	BY
R11	CHANGED REPORTABLE, VIEW 6N-11N	1-2-96	[illegible]
R10	REVISED 6N FLANGE PLT. THICKNESS FROM 1/2" TO 3/4"	12-29-92	JAAD
R9	ADDED A325 ✳✳ REV. NOTES	3-22-88	[illegible]
R8	REV. 2-PIECE BRACING TO 1-PIECE	9-25-85	JHD
R7	REVISED 14NH BRACING & BOLT QTY'S	2-6-85	GLJ
R6	ADD SECTION ASSY. DWG. NOS.	9/16/81	[illegible]
R5	REVISE GEN. NOTE NO. 1. ADD LEG PT. NO.	6/12/79	GLS
R4	CHANGED 14NH, 15NH, 16NH BRACE MAT'L. & WTS.	12-10-73	JER
R3	FLANGE BOLTS IN SEC. 4N WERE 2 1/2" LG.	2/3/72	GLS
R2	SECT. 3WN WAS 3W	7/6/71	GWA
R1	SECS. 4W & 5W REPL. BY 4N & 5N	5/5/71	GWA

REVISIONS

Unarco-Rohn
Division of UNR Industries, Inc.

TITLE: MODEL S.S.V. TOWER
HEAVY SERIES

FILE NO.

SCALE: NONE | MATERIAL | FINISH | WT.

DRAWN: O. HASCHKE | DATE: 1-18-69 | UNLESS OTHERWISE SPECIFIED DIMENSIONS ARE GIVEN IN INCHES | TOLERANCES: DEC. ± FRAC. ± ANGLES ±

CHK'D: 2-28-70 | APP'D: 7-6-70 | DWG. NO. E 680101 | R11

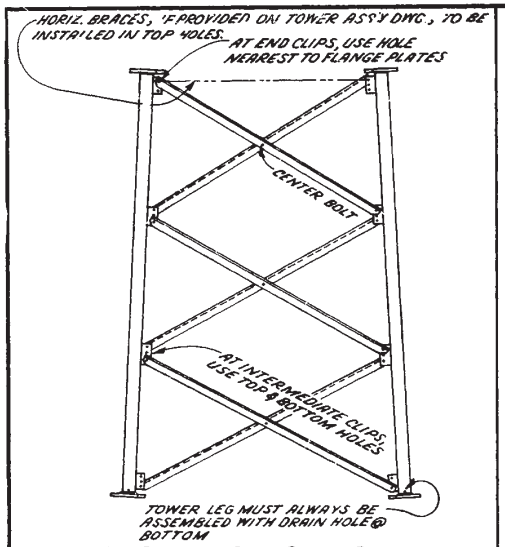

TYPICAL ONE-BOLT, ONE-PIECE BRACE CONNECTION

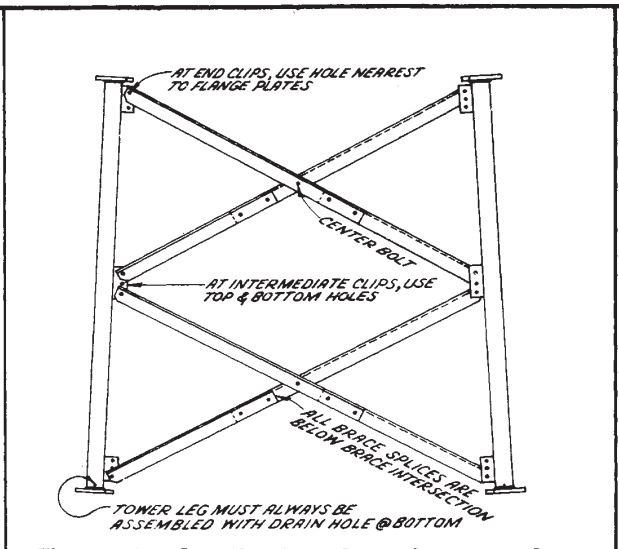

TYPICAL ONE-BOLT, TWO-PIECE BRACE CONNECTION DETAIL

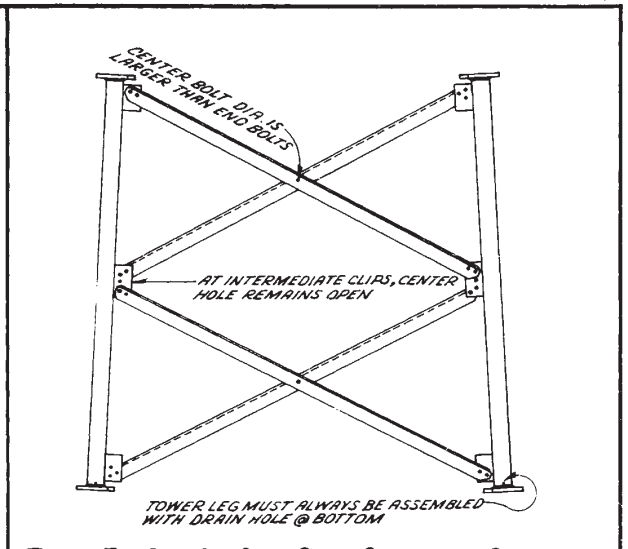

TYPICAL TWO-BOLT, ONE-PIECE BRACE CONNECTION DETAIL

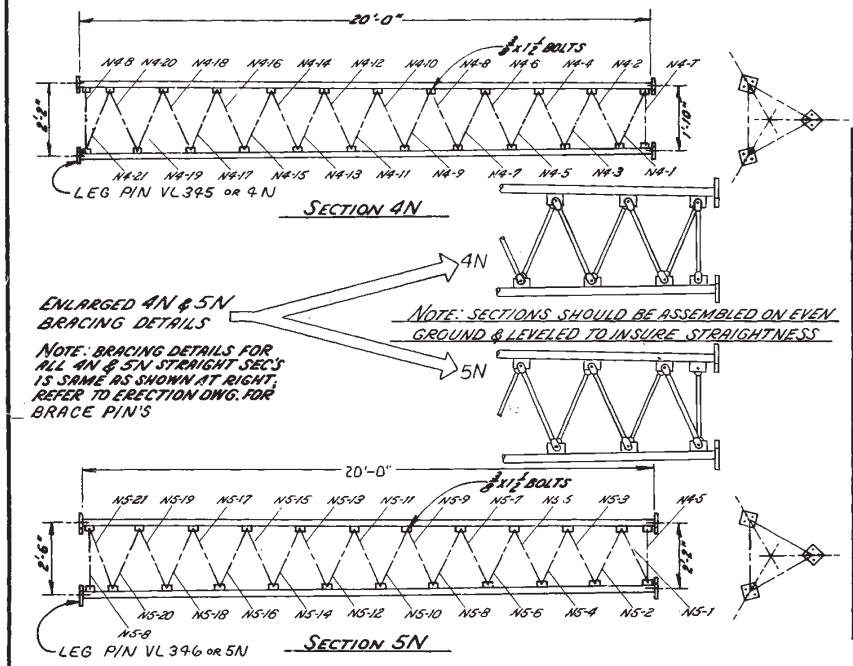

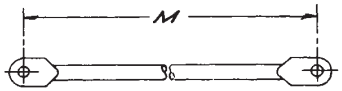

SECTION 4N		SECTION 5N	
PART NO.	M	PART NO.	M
N4-1	21 3/8"	N5-1	24 3/16"
N4-2	21 5/16"	N5-2	25 1/4"
N4-3	22 1/16"	N5-3	25 7/16"
N4-4	22 1/4"	N5-4	25 5/8"
N4-5	22 3/8"	N5-5	25 3/4"
N4-6	22 9/16"	N5-6	25 15/16"
N4-7	22 3/4"	N5-7	26 1/8"
N4-8	22 7/8"	N5-8	26 1/4"
N4-9	23 1/16"	N5-9	26 7/16"
N4-10	23 3/16"	N5-10	26 5/8"
N4-11	23 3/8"	N5-11	26 3/4"
N4-12	23 9/16"	N5-12	26 15/16"
N4-13	23 11/16"	N5-13	27 1/8"
N4-14	23 7/8"	N5-14	27 5/16"
N4-15	24 1/16"	N5-15	27 7/16"
N4-16	24 3/16"	N5-16	27 5/8"
N4-17	24 3/8"	N5-17	27 13/16"
N4-18	24 9/16"	N5-18	28"
N4-19	24 11/16"	N5-19	28 1/8"
N4-20	24 7/8"	N5-20	28 5/16"
N4-21	25 1/16"	N5-21	28 1/2"
N4-T	18 9/16"		
N4-B	22 1/2"		

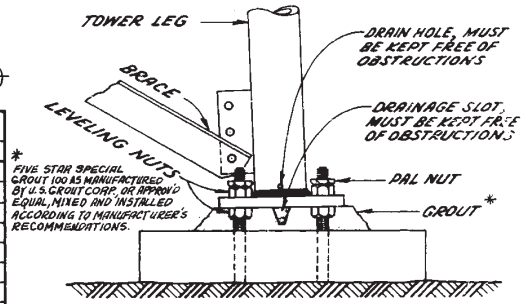

* FIVE STAR SPECIAL GROUT 100 AS MANUFACTURED BY U.S. GROUT CORP. OR APPROV'D EQUAL, MIXED AND INSTALLED ACCORDING TO MANUFACTURER'S RECOMMENDATIONS.

GROUTING & DRAINAGE DETAILS

NO	DESCRIPTION	DATE	BY
R3	REVISED MK. NO'S. TO PIN'S & ADDED LEG PIN'S.	5 19 77	P.C.H.
R2	ADDED ASSEMBLY NOTE	[illegible]	D.S.
R1	REVISED GENERAL LOCATION OF NOTES & MK. NOS	7 6 76	Q.L.L.

REVISIONS

ROHN® MANUFACTURING
DIVISION OF UNARCO INDUSTRIES

TITLE BRACING, GROUTING, & DRAINAGE DATA FOR MODEL S.S.V. TOWERS

THIS DRAWING IS THE PROPERTY OF ROHN. IT IS NOT TO BE REPRODUCED, COPIED, OR TRACED IN WHOLE OR IN PART WITHOUT OUR WRITTEN CONSENT

FILE NO

SCALE ~ | MATERIAL | FINISH

DWN BY O.H. DATE 3-3-72
CHK'D BY [illegible] DATE 3-6-72
APP'D ENGRG CW DATE 3-8-72
APP'D SALES RAK DATE 3-10-72

UNLESS OTHERWISE SPECIFIED DIMENSIONS ARE GIVEN IN INCHES.
TOLERANCES DEC. : FRAC. : ANGLES :

DWG NO SK-720305 R5

PRINTED IN U.S.A.

IMPORTANT: LEG PART NO. IS STAMPED AT BOTTOM OF BASE FLANGE PLATE OF EACH SECTION LEG.

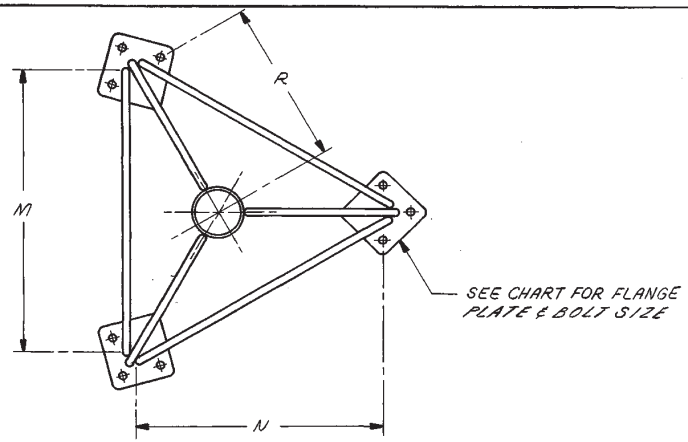

TAPERED TOP ASSY. BILL of MATERIAL & DETAIL										
ASSY. NO.	TOWER SEC. NO.	TAPERED TOP		M	N	R	FLANGE PL SIZE	FLANGE BOLTS		
		QUAN.	PT. NO.					QUAN.	SIZE	PT. NO.
1TT	1W, 1WB 2W	1	1TTA	1'-2"	1'-0 1/8"	0'-8 1/16"	3 × 3 × 3/8	9	3/8 × 1 1/2	210008GA
3TT	2WST, 2WB, 3WN	1	3TTA	1'-6"	1'-3 9/16"	0'-10 3/8"	3 × 3 × 3/8	9	3/8 × 1 1/2	210008GA
4TTN	3WNST 3WNB, 4N	1	4TTNA	1'-10"	1'-7 1/16"	1'-0 11/16"	4 × 4 × 1/2	9	1/2 × 2	210020GA
5TTN	4NST, 4NA 4NB, 4NC, 5N	1	5TTNA	2'-2"	1'-10 1/2"	1'-3"	4 1/2 × 4 1/2 × 5/8	9	5/8 × 2 1/4	210032GA
6TT	5NST, 5NA 5NB, 5NC, 6N	1	6TTA	2'-6"	2'-2"	1'-5 5/16"	4 1/2 × 4 1/2 × 5/8	9	5/8 × 2 1/4	210032GA

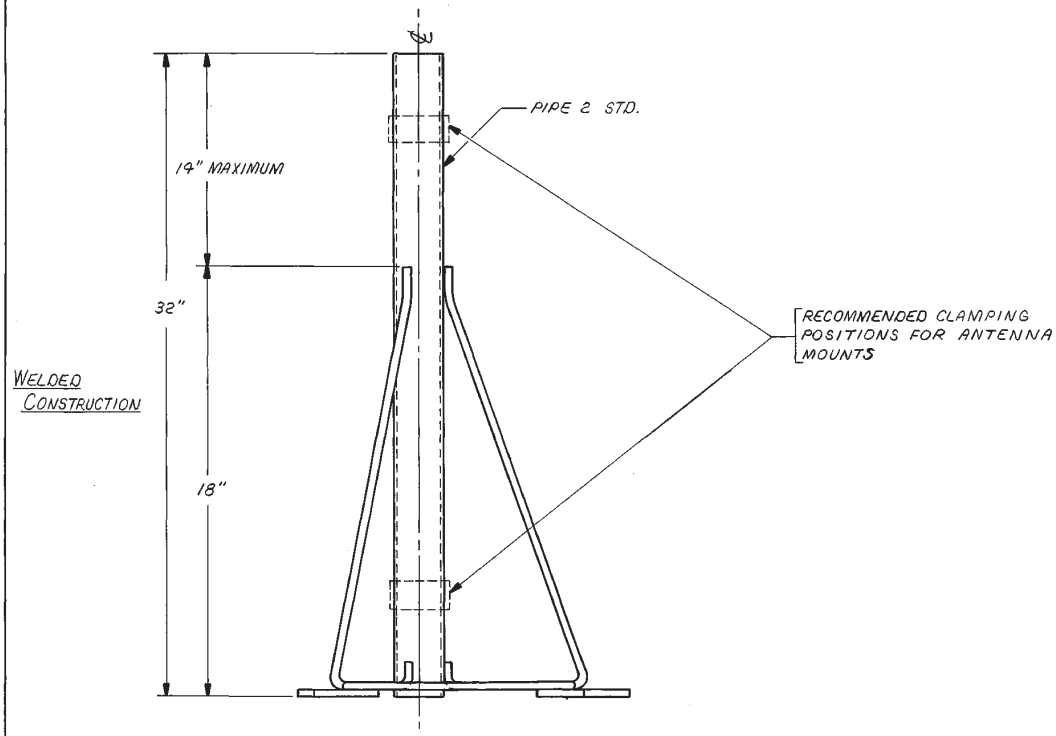

DESIGN BASED ON THRUST OF 500# @ CLAMPING POSITION

TAPERED TOP DETAILS

R10	REMOVED APL SECTIONS	9-28-88	FHT
R9	REVISED 2STD NOTES	3-22-88	CHD
R8	REVISED BILL OF MATERIAL	8-27-80	KTL
R7	UPDATE DWG.	2/2/79	GLS

R6 REDRAWN 1-3-77 MDI

No. ▲ Revision Description ▲Date ▲By

Unarco-Rohn
Division of Unarco Industries, Inc.

Title: SUPPORT TUBE DETAILS FOR S. S. V. TOWERS

Scale: NONE

Drawn by: MDI Date: 1-3-77

Checked by: DAL Date: 1-4-77

Approved by Engineering: CW Date: 1-5-77

Approved by Production: Date

Approved by Sales: FAH Date: 1-11-77

Unless otherwise specified, dimensions are given in inches.
Tolerances
Decimals ± Fractions ± Angles ±
Material Finish Weight

File Number

Drawing Number: SK 670407R10

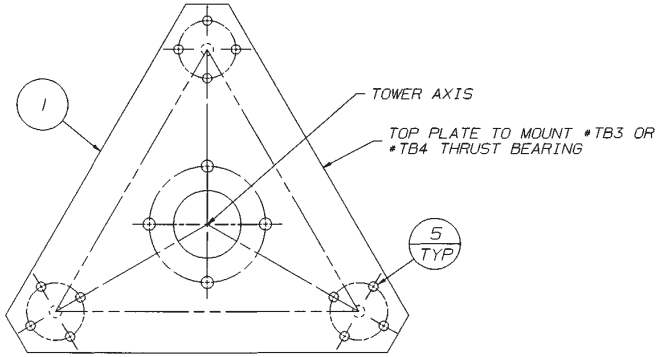

PLAN

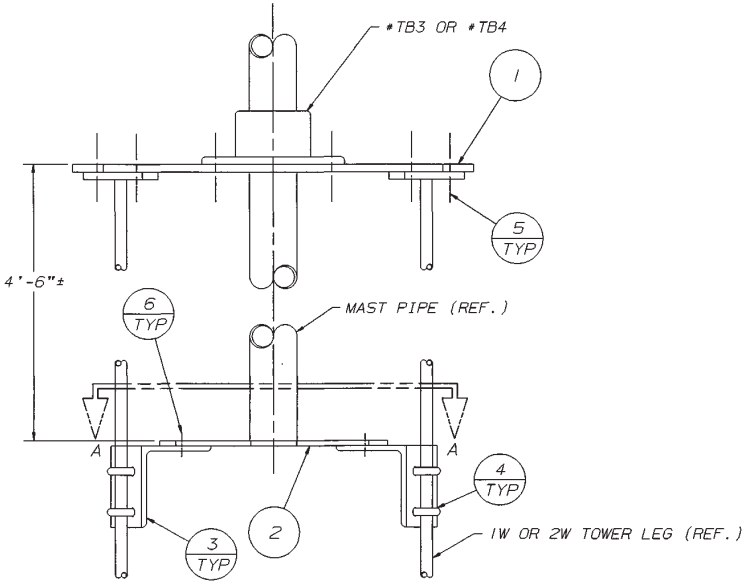

ELEVATION

BILL OF MATERIAL

ITEM	QUAN.	PART NO.	DESCRIPTION	DWG. NO.
1	1	VU476	TOP PLATE	B942446
2	1	VU477	ROTOR PLATE	C941620
3	3	VU478	ANGLE BRACKET	B942436
4	6	JR67A	U-BOLT ASSY	B651028
5	12	210008GA	3/8" X 1-1/2" BOLT ASSY	C770404
6	3	210007GAW	3/8" X 1-3/8" BOLT ASSY W/WASHERS	C770404

NOTE: FLAT WASHERS ARE PROVIDED FOR ALL SLOTTED HOLES.

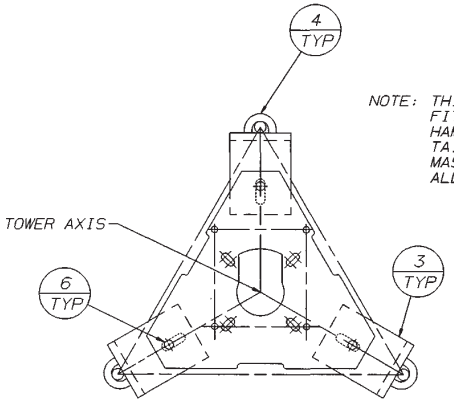

NOTE: THIS ROTOR PLATE ASSY WILL FIT: CORNELL-DUBILIER, HAM M, HAMIV, HAMIII, TAILTWISTER, CHANNEL MASTER, 9508A, 9515A, ALLIANCE, #HD73

VIEW A-A
ASSY P/N: VU479A

No. ▲ Revision Description	▲ Date	▲ Rev By	▲ Ckd By	▲ Appd By

ROHN

Scale: NONE	By	Date
Drawn:	SRH	12/27/94
Checked:	WMN	2-21-95
App. Eng.:	TS	2-22-95
App. Sales:	DL	2-22-95

Title: ROTOR PLATE ASSEMBLY FOR 1W AND 2W

ENG. FILE:

DRAWING NO.: C941612

BILL OF MATERIAL

ITEM	QUAN.	PART NO.	DESCRIPTION	DWG. NO.
1	1	VU111	TOP PLATE	B781304
2	1	VU112	ROTOR PLATE	C781604
3	3	VU113	ANGLE BRACKET	B690816
4	6	JR41A	U-BOLT ASSY.	B651028
5	12	210008GA	3/8" X 1-1/2" BOLT ASSY	C770404
6	3	210007GAW	3/8" X 1-3/8" BOLT ASSY W/WASHERS	C770404

NOTE: FLAT WASHERS ARE PROVIDED FOR ALL SLOTTED HOLES.

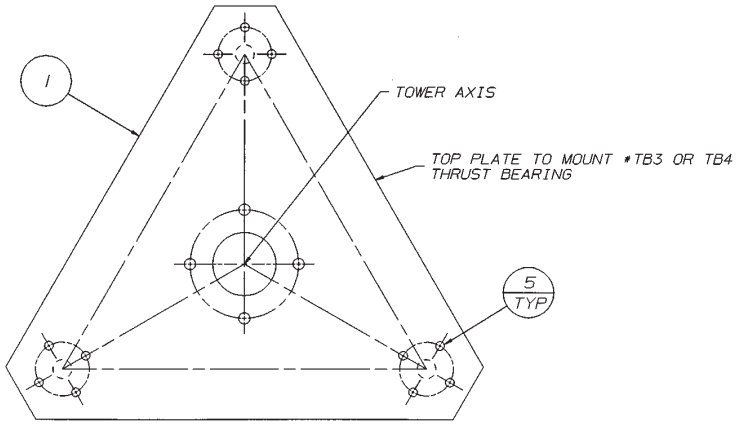

PLAN

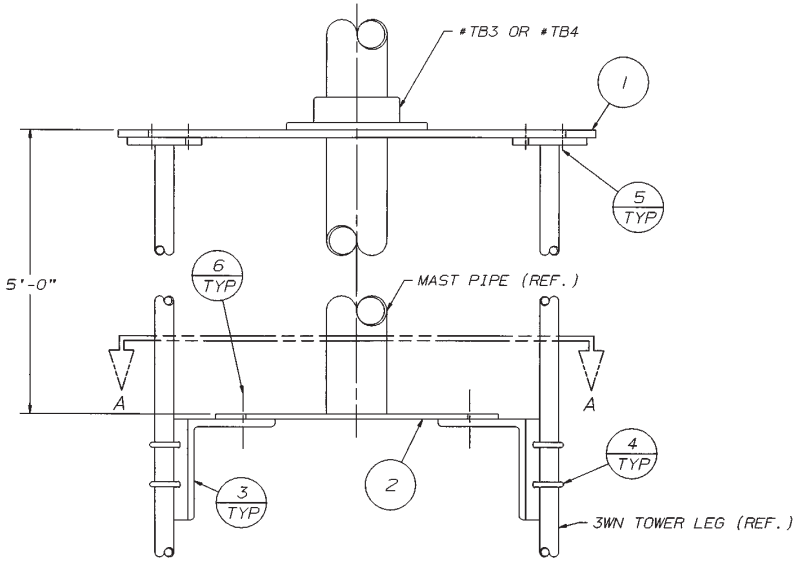

ELEVATION

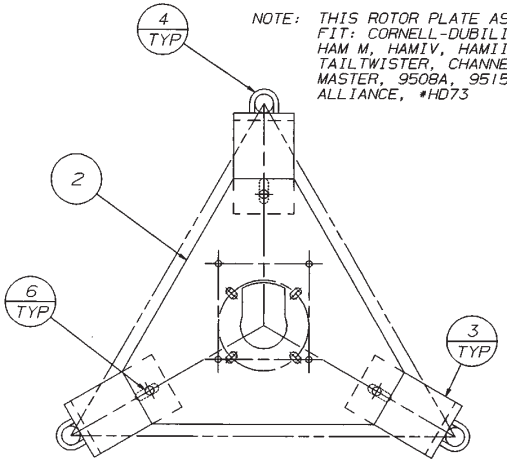

NOTE: THIS ROTOR PLATE ASSY WILL FIT: CORNELL-DUBILIER, HAM M, HAMIV, HAMIII, TAILTWISTER, CHANNEL MASTER, 9508A, 9515A, ALLIANCE, #HD73

VIEW A-A

ASSY P/N: VU474A

No.	Revision Description	Date	Rev By	Ckd By	Appd By

ROHN

Scale: NONE	By	Date
Drawn:	SRH	2/4/95
Checked:	WMW	2-17-95
App. Eng.:	TS	2-22-95
App. Sales:	DL	2-22-95

Title: ROTOR PLATE ASSEMBLY FOR 3WN

ENG. FILE:

DRAWING NO.: C941500

BILL OF MATERIAL

ASSY P/N: VU140

ITEM	QUAN.	PART NO.	DESCRIPTION	DWG. NO.
1	1	VU92	TOP PLATE	B770497
2	1	VU137	ROTOR PLATE	C791322
3	3	VU138	ANGLE BRACKET	B790928
4	6	JR67A	U-BOLT ASSY	B651028
5	15	210019GA	1/2" X 1-3/4" BOLT ASSY	C770404
6	3	250011G	1/2" WASHER	N/A

NOTE: FLAT WASHERS ARE PROVIDED FOR ALL SLOTTED HOLES.

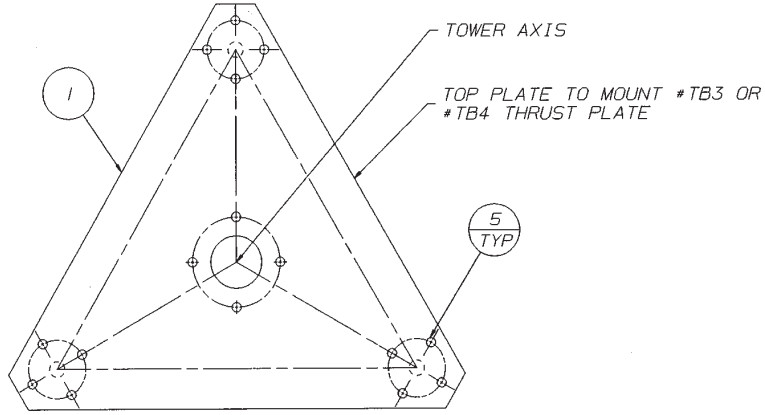

PLAN

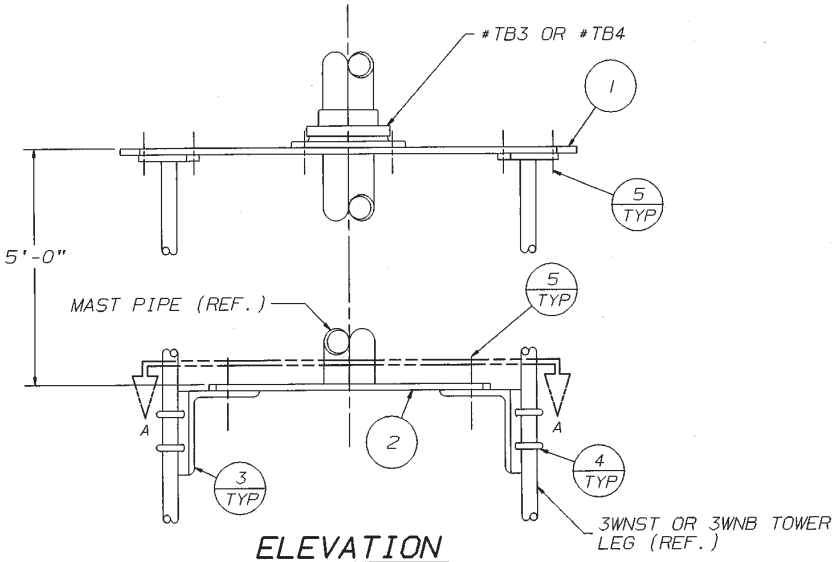

ELEVATION

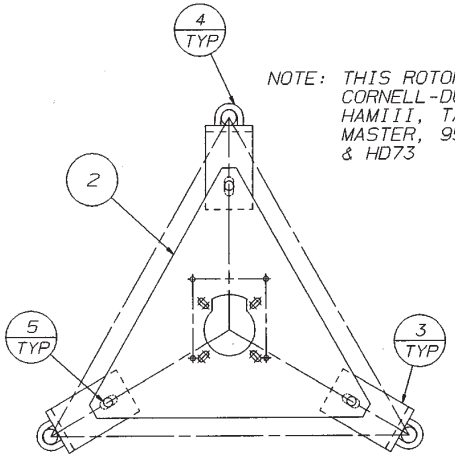

NOTE: THIS ROTOR PLATE ASSY WILL FIT CORNELL-DUBILIER, HAM M, HAMIV, HAMIII, TAILTWISTER, CHANNEL MASTER, 9508A, 9515A, ALLIANCE, & HD73

VIEW A-A
ASSY P/N: VU140

No.	Revision Description	Date	Rev By	Ckd By	Appd By
R1	REDRAW & DELETED TB3 FROM B.O.M.	1/26/95	SRH	WMN	TS

ROHN

Scale: NONE	By	Date
Drawn:	KTL	11/14/79
Checked:	JHD	12/5/79
App. Eng.:	TS	12/6/79
App. Sales:	JC	12/6/79

Title: ROTOR PLATE ASSY FOR 3WNST OR 3WNB

ENG. FILE:

DRAWING NO.: C791323R1

ELEVATION

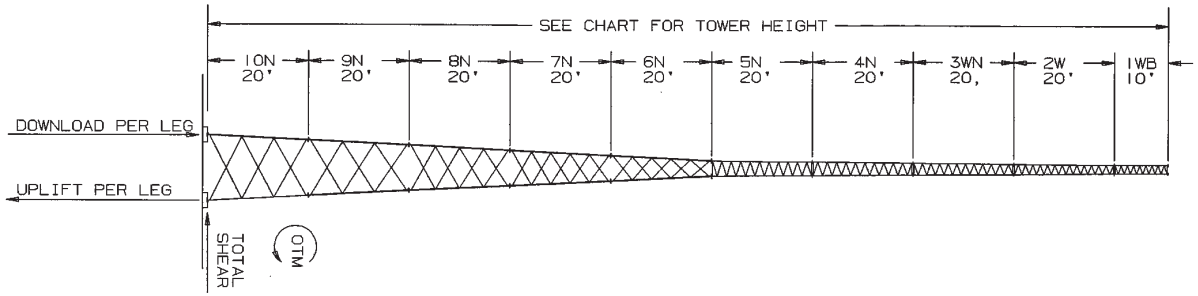

TOWER ASSEMBLY NUMBER	TOWER HEIGHT (FEET)	TOP SECTION	BASE SECTION			ALLOWABLE PROJECTED AREA (SQ. FT.)				BASE REACTIONS			
			PART NO.	*A-BOLTS 12 REQ'D	FACE SPREAD	TOWER TOP		30 FEET BELOW TOP		DOWNLOAD (POUNDS)	UPLIFT (POUNDS)	TOTAL SHEAR (POUNDS)	OTM (FOOT POUNDS)
						ROUNDS	OR FLATS	ROUNDS	OR FLATS				
SS040D70	40	2W	3WN	SB3	1' 10	16.7	10.0	20.0	12.0	14,300	13,500	970	22,000
SS050D70	50	1WB	3WN	SB3	1' 10	15.0	9.0	18.3	11.0	19,200	18,400	970	29,700
SS060D70	60	2W	4N	SB4	2' 2	15.0	9.0	18.3	11.0	23,000	21,900	1,110	42,100
SS070D70	70	1WB	4N	SB4	2' 2	13.3	8.0	16.7	10.0	27,300	26,100	1,130	50,000
SS080D70	80	2W	5N	SB5	2' 6	13.3	8.0	16.7	10.0	31,600	30,100	1,320	66,500
SS090D70	90	1WB	5N	SB5	2' 6	11.7	7.0	15.0	9.0	35,200	33,600	1,330	74,200
SS100D70	100	2W	6N	5/8X42AB	4' 6 1/4	11.7	7.0	15.0	9.0	26,000	24,100	1,850	97,900
SS110D70	110	1WB	6N	5/8X42AB	4' 6 1/4	10.0	6.0	14.2	8.5	28,200	26,200	1,870	106,300
SS120D70	120	2W	7N	5/8X42AB	6' 6 3/4	10.0	6.0	14.2	8.5	26,300	24,000	2,510	141,700
SS130D70	130	1WB	7N	5/8X42AB	6' 6 3/4	9.2	5.5	13.3	8.0	28,300	25,900	2,540	152,600
SS140D70	140	2W	8N	5/8X42AB	8' 6 3/4	9.2	5.5	13.3	8.0	29,200	26,300	3,310	204,100
SS150D70	150	1WB	8N	5/8X42AB	8' 6 3/4	8.3	5.0	12.5	7.5	30,800	27,800	3,340	215,300
SS160D70	160	2W	9N	5/8X42AB	10' 6 3/4	8.3	5.0	12.5	7.5	33,300	29,900	4,230	286,400
SS170D70	170	1WB	9N	5/8X42AB	10 '6 3/4	7.5	4.5	12.5	7.5	34,900	31,500	4,280	301,000
SS180D70	180	2W	10N	3/4X48AB	12' 7 1/4	7.5	4.5	12.5	7.5	38,500	34,500	5,350	395,700
SS190D70	190	1WB	10N	3/4X48AB	12' 7 1/4	6.7	4.0	11.7	7.0	39,700	35,600	5,380	407,700

* ANCHOR BOLTS OR BASE PART NO.

GENERAL NOTES

1. TOWER DESIGNS ARE IN ACCORDANCE WITH APPROVED NATIONAL STANDARD ANSI/EIA-222-E-1991 (NO ICE).
2. EQUIVALENT FLAT-PLATE ANTENNA AREAS, BASED ON EIA RS-222-C, MUST NOT EXCEED THE AREAS SHOWN FOR FLAT MEMBER ANTENNAS.
3. TOWER DESIGNS ASSUME ALLOWABLE PROJECTED AREAS ARE SYMMETRICALLY PLACED ON THE TOWER.
4. DESIGNS ASSUME ONE 7/8 LINE TO TOP AND TWO 7/8 LINES TO 30 FEET BELOW TOP, ONE PER FACE.
5. DO NOT INSTALL OR DISMANTLE TOWERS WITHIN FALLING DISTANCE OF ELECTRICAL AND/OR TELEPHONE LINES.
6. TOWER ERECTION AND DISMANTLING MUST BE BY QUALIFIED AND EXPERIENCED PERSONNEL.
7. INSTALL WARNING PLATE (P/N ACWS) IN A HIGHLY VISIBLE LOCATION.
8. ALL ANTENNA INSTALLATIONS MUST BE GROUNDED IN ACCORDANCE WITH LOCAL AND NATIONAL CODES.
9. FOR SECTION ASSEMBLY DETAILS AND PART NUMBERS SEE DRAWING E690800.
10. FOR ADDITIONAL BRACING, GROUTING AND DRAINAGE DETAILS SEE DRAWING SK720305.
11. FOR TAPERED TOP DETAILS SEE DRAWING SK670407.
12. ALL TOWERS PROVIDED WITH (P/N ITT) TAPERED TOP.
13. FOR STEP BOLT DETAILS SEE DRAWING B651264.
14. FOR FOUNDATION DETAILS SEE DRAWING D870480.

No.	Revision Description	Date	Rev By	Ckd By	Appd By
R1	REV. NOTE 1 WAS - EIA-222-D	11-11-91	RKB	KLR	TS

ROHN

Scale: NONE	By	Date
Drawn:	WDU	9-2-87
Checked:	GPW	9-30-87
App. Eng.:	RAM	9-30-87
App. Sales:	AE	2-12-88

Title: 40' TO 190' MODEL SSV TOWERS 70 MPH WIND SPEEDS ANSI/EIA-222-E (NO ICE)

ENG. FILE:

DRAWING NO.: C870698 R1

SELF-SUPPORTING TOWER
70 MPH Basic Wind Speed (No Ice)

		Tower Height															
Item & Part Number	**Wt.**	40′	50′	60′	70′	80′	90′	100′	110′	120′	130′	140′	150′	160′	170′	180′	190′
Tapered Top 1TT	20	1	1	1	1	1	1	1	1	1	1	1	1	1	1	1	1
10′ Welded Straight Section 1WB	63		1		1		1		1		1		1		1		1
20′ Welded Tapered Section 2W	153	1	1	1	1	1	1	1	1	1	1	1	1	1	1	1	1
20′ Welded Tapered Section 3WN	235	1*	1*	1	1	1	1	1	1	1	1	1	1	1	1	1	1
20′ Knock Down Tapered Section 4N	470			1*	1*	1	1	1	1	1	1	1	1	1	1	1	1
20′ Knock Down Tapered Section 5N	580					1*	1*	1	1	1	1	1	1	1	1	1	1
20′ Knock Down Tapered Section 6N	515							1*	1*	1	1	1	1	1	1	1	1
20′ Knock Down Tapered Section 7N	575									1*	1*	1	1	1	1	1	1
20′ Knock Down Tapered Section 8N	720											1*	1*	1	1	1	1
20′ Knock Down Tapered Section 9N	770													1*	1*	1	1
20′ Knock Down Tapered Section 10N	870															1*	1*
Base Grounding Kit BGKE	10	2	2	2	2	2	2	3	3	3	3	3	3	3	3	3	3
SB3	58	1	1														
SB4	100			1	1												
SB5	115					1	1										
6NABD	50							1	1	1	1	1	1	1	1		
10NABD	80															1	1
Anti-Climb Warning Sign ACWS		1	1	1	1	1	1	1	1	1	1	1	1	1	1	1	1
Tower Weight		486	549	998	1061	1593	1656	2053	2116	2628	2691	3348	3411	4118	4181	5018	5081

*Base section of the tower should be designated as such.

See applicable drawings for foundation and loading details.

All types of antenna installations should be thoroughly inspected by qualified personnel and re-marked with hazard and warning labels at least twice a year to insure safety and proper performance.

ELEVATION

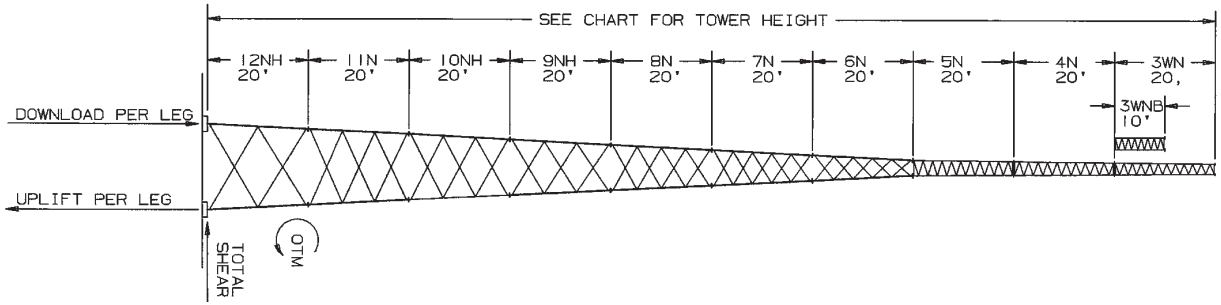

TOWER ASSEMBLY NUMBER	TOWER HEIGHT (FEET)	TOP SECTION	BASE SECTION			ALLOWABLE PROJECTED AREA (SQ. FT.)				BASE REACTIONS			
			PART NO.	*A-BOLTS 12 REQ'D	FACE SPREAD	TOWER TOP		30 FEET BELOW TOP		DOWNLOAD (POUNDS)	UPLIFT (POUNDS)	TOTAL SHEAR (POUNDS)	OTM FOOT (POUNDS)
						ROUNDS	FLATS	ROUNDS	FLATS				
SS040D90	40	3WN	4N	SB4	2' 2	16.7	10.0	20.0	12.0	20,800	19,800	1,700	38,100
SS050D90	50	3WNB	5N	SB5	2' 6	16.7	10.0	20.0	12.0	27,900	26,600	1,950	58,900
SS060D90	60	3WN	5N	SB5	2' 6	14.2	8.5	17.5	10.5	33,700	32,400	1,930	71,400
SS070D90	70	3WNB	6N	5/8X42AB	4' 6 1/4	14.2	8.5	17.5	10.5	27,100	25,500	2,760	103,100
SS080D90	80	3WN	6N	5/8X42AB	4' 6 1/4	12.5	7.5	15.8	9.5	31,300	29,600	2,820	119,300
SS090D90	90	3WNB	7N	5/8X42AB	6' 6 3/4	12.5	7.5	15.8	9.5	31,100	29,100	3,850	169,900
SS100D90	100	3WN	7N	5/8X42AB	6' 6 3/4	10.0	6.0	13.3	8.0	33,100	30,900	3,830	180,600
SS110D90	110	3WNB	8N	5/8X42AB	8' 6 3/4	10.0	6.0	13.3	8.0	36,000	33,400	5,070	255,500
SS120D90	120	3WN	8N	5/8X42AB	8' 6 3/4	8.3	5.0	11.7	7.0	38,100	35,400	5,100	270,300
SS130D90	130	3WNB	9NH	5/8X42AB	10' 6 3/4	8.3	5.0	11.7	7.0	42,900	39,700	6,520	375,800
SS140D90	140	3WN	9NH	5/8X42AB	10' 6 3/4	6.7	4.0	10.0	6.0	44,500	41,200	6,540	389,800
SS150D90	150	3WNB	10NH	3/4X48AB	12' 7 1/4	6.7	4.0	10.0	6.0	50,900	47,000	8,280	532,100
SS160D90	160	3WN	10NH	3/4X48AB	12' 7 1/4	5.8	3.5	8.3	5.0	52,700	48,700	8,330	550,900
SS170D90	170	3WNB	11N	7/8X60AB	14' 7 7/8	5.8	3.5	8.3	5.0	60,900	56,000	10,570	739,500
SS180D90	180	3WN	11N	7/8X60AB	14' 7 7/8	5.0	3.0	7.5	4.5	62,900	57,900	10,650	763,700
SS190D90	190	3WNB	12NH	7/8X60AB	16' 8 3/8	5.0	3.0	7.5	4.5	73,000	66,900	13,060	1,007,000

* ANCHOR BOLTS OR BASE PART NO.

GENERAL NOTES

1. TOWER DESIGNS ARE IN ACCORDANCE WITH APPROVED NATIONAL STANDARD ANSI/EIA-222-E-1991 (NO ICE).
2. EQUIVALENT FLAT-PLATE ANTENNA AREAS, BASED ON EIA RS-222-C, MUST NOT EXCEED THE AREAS SHOWN FOR FLAT MEMBER ANTENNAS.
3. TOWER DESIGNS ASSUME ALLOWABLE PROJECTED AREAS ARE SYMMETRICALLY PLACED ON THE TOWER.
4. DESIGNS ASSUME ONE 7/8 LINE TO TOP AND TWO 7/8 LINES TO 30 FEET BELOW TOP, ONE PER FACE.
5. DO NOT INSTALL OR DISMANTLE TOWERS WITHIN FALLING DISTANCE OF ELECTRICAL AND/OR TELEPHONE LINES.
6. TOWER ERECTION AND DISMANTLING MUST BE BY QUALIFIED AND EXPERIENCED PERSONNEL.
7. INSTALL WARNING PLATE (P/N ACWS) IN A HIGHLY VISIBLE LOCATION.
8. ALL ANTENNA INSTALLATIONS MUST BE GROUNDED IN ACCORDANCE WITH LOCAL AND NATIONAL CODES.
9. FOR SECTION ASSEMBLY DETAILS AND PART NUMBERS SEE DRAWING E680101.
10. FOR ADDITIONAL BRACING, GROUTING AND DRAINAGE DETAILS SEE DRAWING SK720305.
11. FOR TAPERED TOP DETAILS SEE DRAWING SK670407.
12. ALL TOWERS WITH 3WN TOP SECTION PROVIDED WITH (P/N 3TT) TAPERED TOP.
13. ALL TOWERS WITH 3WNB TOP SECTION PROVIDED WITH (P/N 4TTN) TAPERED TOP.
14. FOR STEP BOLT DETAILS SEE DRAWING B651264.
15. FOR FOUNDATION DETAILS SEE DRAWING D870483.

No.	Revision Description	Date	Rev By	Ckd By	Appd By
R1	REV. NOTE 1 WAS EIA-222-D	11-11-91	RKB		

ROHN

Scale: NONE	By	Date
Drawn:	WDU	9/2/87
Checked:	GPW	9/30/87
App. Eng.:	RAM	9/30/87
App. Sales:	AE	2-12-88

Title: 40' TO 190' MODEL SSV TOWERS 90 MPH WIND SPEED ANSI/EIA-222-E (NO ICE)

ENG. FILE:

DRAWING NO.: C870699 R1

Parts List P-487
(New Sheet)

SELF-SUPPORTING TOWER
90 MPH Basic Wind Speed (No Ice)

		Tower Height															
Item & Part Number	**Wt.**	40′	50′	60′	70′	80′	90′	100′	110′	120′	130′	140′	150′	160′	170′	180′	190′
20′ Welded Tapered Section 3WN w/3TT Tapered Top	255	1		1		1		1		1		1		1		1	
10′ Welded Straight Section 3WNB w/4TTN Tapered Top	172		1		1		1		1		1		1		1		1
20′ Knock Down Tapered Section 4N	470	1*	1	1	1	1	1	1	1	1	1	1	1	1	1	1	1
20′ Knock Down Tapered Section 5N	580		1*	1*	1	1	1	1	1	1	1	1	1	1	1	1	1
20′ Heavy Duty Knock Down Tapered Section 6N	515				1*	1*	1	1	1	1	1	1	1	1	1	1	1
20′ Heavy Duty Knock Down Tapered Section 7N	575						1*	1*	1	1	1	1	1	1	1	1	1
20′ Heavy Duty Knock Down Tapered Section 8N	720								1*	1*	1	1	1	1	1	1	1
20′ Heavy Duty Knock Down Tapered Section 9NH	885										1*	1*	1	1	1	1	1
20′ Heavy Duty Knock Down Tapered Section 10NH	995												1*	1*	1	1	1
20′ Heavy Duty Knock Down Tapered Section 11N	1455														1*	1*	1
20′ Heavy Duty Knock Down Tapered Section 12NH	1860																1*
Base Grounding Kit BGKE	10	2	2	2	3	3	3	3	3	3	3	3	3	3	3	3	3
SB4	100	1															
SB5	115		1	1													
6NABD	50				1	1	1	1	1	1	1	1					
10NABD	80												1	1			
11NABD	140														1	1	1
Anti-Climb Warning Sign ACWS		1	1	1	1	1	1	1	1	1	1	1	1	1	1	1	1
Tower Weight		845	1357	1440	1817	1900	2392	2475	3112	3195	3997	4080	5022	5105	6537	6620	8397

*Base section of the tower should be designated as such.

See applicable drawings for foundation and loading details.

All types of antenna installations should be thoroughly inspected by qualified personnel and re-marked with hazard and warning labels at least twice a year to insure safety and proper performance.

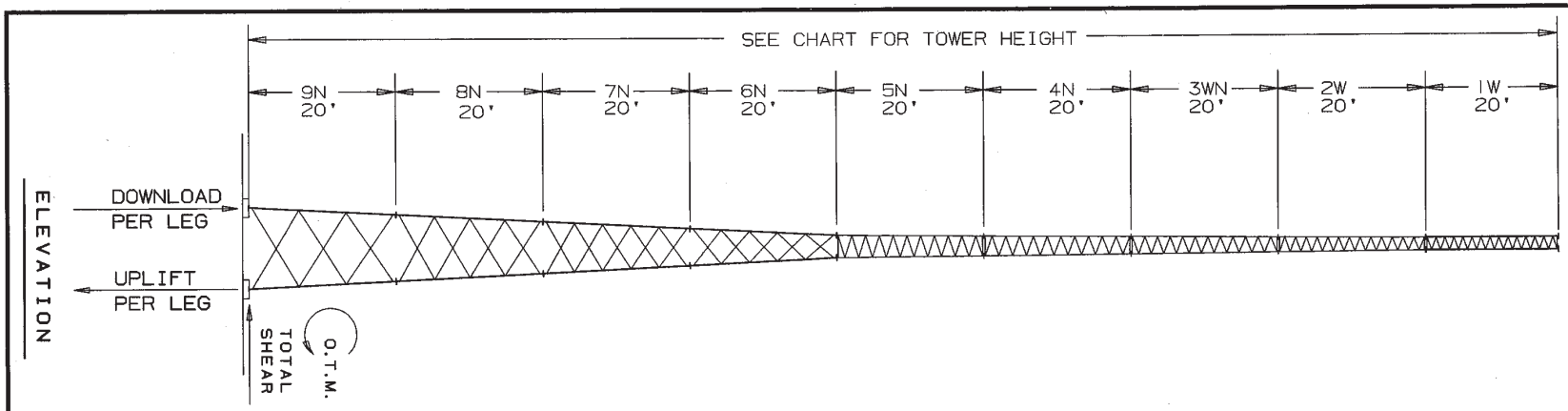

TOWER ASSEMBLY NUMBER	TOWER HEIGHT (FEET)	TOP SECTION	BASE SECTION			ALLOWABLE PROJECTED AREA (SQ. FT.)				BASE REACTIONS			
			PART NO.	*A-BOLTS 12 REQ'D	FACE SPREAD	TOWER TOP		30 FEET BELOW TOP		DOWNLOAD (POUNDS)	UPLIFT (POUNDS)	TOTAL SHEAR (POUNDS)	OTM (FOOT POUNDS)
						ROUNDS	OR FLATS	ROUNDS	OR FLATS				
SS040D70EXC	40	1W	2W	SB2	1' 6	8.3	5.0	13.3	8.0	10,550	10,010	640	13,320
SS060D70EXC	60	1W	3WN	SB3	1' 10	7.5	4.5	12.5	7.5	17,540	16,780	760	27,100
SS080D70EXC	80	1W	4N	SB4	2' 2	6.7	4.0	11.7	7.0	24,620	23,500	960	45,050
SS100D70EXC	100	1W	5N	SB5	2' 6	5.8	3.5	10.8	6.5	31,980	30,450	1,180	67,320
SS120D70EXC	120	1W	6N	5/8X42AB	4' 6 1/4	5.8	3.5	10.0	6.0	26,490	24,580	1,750	99,820
SS140D70EXC	140	1W	7N	5/8X42AB	6' 6 3/4	5.8	3.5	9.2	5.5	27,040	24,700	2,430	145,530
SS160D70EXC	160	1W	8N	5/8X42AB	8' 6 3/4	5.0	3.0	8.3	5.0	29,350	26,490	3,220	204,950
SS180D70EXC	180	1W	9N	5/8X42AB	10' 6 3/4	5.0	3.0	7.5	4.5	33,510	30,110	4,150	288,180

* ANCHOR BOLTS OR BASE PART NO.

GENERAL NOTES

1. TOWER DESIGNS ARE IN ACCORDANCE WITH APPROVED NATIONAL STANDARD ANSI/EIA-222-E-1991 (NO ICE).
2. EQUIVALENT FLAT-PLATE ANTENNA AREAS, BASED ON EIA RS-222-C, MUST NOT EXCEED THE AREAS SHOWN FOR FLAT MEMBER ANTENNAS.
3. TOWER DESIGNS ASSUME ALLOWABLE PROJECTED AREAS ARE SYMMETRICALLY PLACED ON THE TOWER.
4. DESIGNS ASSUME ONE 7/8 LINE TO TOP AND TWO 7/8 LINES TO 30 FEET BELOW TOP, ONE PER FACE.
5. DO NOT INSTALL OR DISMANTLE TOWERS WITHIN FALLING DISTANCE OF ELECTRICAL AND/OR TELEPHONE LINES.
6. TOWER ERECTION AND DISMANTLING MUST BE BY QUALIFIED AND EXPERIENCED PERSONNEL.
7. INSTALL WARNING PLATE (P/N ACWS) IN A HIGHLY VISIBLE LOCATION.
8. ALL ANTENNA INSTALLATIONS MUST BE GROUNDED IN ACCORDANCE WITH LOCAL AND NATIONAL CODES.
9. FOR SECTION ASSEMBLY DETAILS AND PART NUMBERS SEE DRAWING E690800.
10. FOR ADDITIONAL BRACING, GROUTING AND DRAINAGE DETAILS SEE DRAWING SK720305.
11. FOR TAPERED TOP DETAILS SEE DRAWING SK670407.
12. ALL TOWERS PROVIDED WITH (P/N 1TT) TAPERED TOP.
13. FOR STEP BOLT DETAILS SEE DRAWING B651264.
14. FOR FOUNDATION DETAILS SEE DRAWING D870480.

No.	Revision Description	Date	Rev By	Ckd By	Appd By
R1	EIA-222-E-1991 WAS EIA-222-D	11-27-91	RKB		

ROHN

Scale: NONE	By	Date
Drawn:	RKB	12-9-88
Checked:	GPW	12-14-88
App. Eng.:	RAM	12-21-88
App. Sales:	PM	12-22-88

Title: 40' - 180' MODEL SSV TOWERS 70MPH WIND SPEED ANSI/EIA 222 E (NO ICE)

ENG. FILE:

DRAWING NO.: C881239 R1

SELF-SUPPORTING TOWER
70 MPH Basic Wind Speed (No Ice)
(1W at Top – ANSI/EIA 222 E, Exposure C)

		Tower Height							
Item & Part Number	**Wt.**	40′	60′	80′	100′	120′	140′	160′	180′
Tapered Top 1TT	20	1	1	1	1	1	1	1	1
18′ Welded Straight Section 1W	107	1	1	1	1	1	1	1	1
20′ Welded Tapered Section 2W	135	1	1	1	1	1	1	1	1
20′ Welded Tapered Section 3WN	235		1	1	1	1	1	1	1
20′ Knock Down Tapered Section 4N	470			1	1	1	1	1	1
20′ Knock Down Tapered Section 5N	580				1	1	1	1	1
20′ Knock Down Tapered Section 6N	515					1*	1	1	1
20′ Knock Down Tapered Section 7N	575						1*	1	1
20′ Knock Down Tapered Section 8N	720							1*	1
20′ Knock Down Tapered Section 9N	770								1*
Base Grounding Kit BGKE	10	2	2	2	2	3	3	3	3
Short Base Section SB2	45	1							
Short Base Section SB3	58		1						
Short Base Section SB4	100			1					
Short Base Section SB5	115				1				
Anchor Bolt Assembly 6NABD	50					1	1	1	1
Anti-Climb Warning Sign ACWS		1	1	1	1	1	1	1	1
Tower Weight		345	593	1105	1700	2150	2725	3445	4215

*Base section of the tower should be designated as such.
See applicable drawings for foundation and loading details.
All types of antenna installations should be thoroughly inspected by qualified personnel and re-marked with hazard and warning labels at least twice a year to insure safety and proper performance.

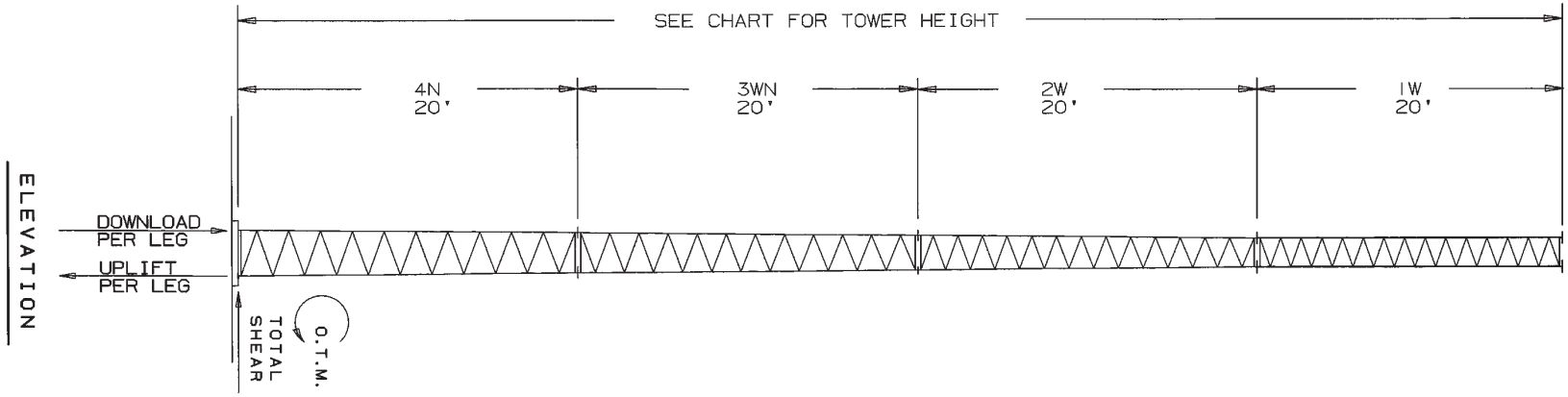

TOWER ASSEMBLY NUMBER	TOWER HEIGHT (FEET)	TOP SECTION	BASE SECTION			ALLOWABLE PROJECTED AREA (SQ. FT.)				BASE REACTIONS			
			PART NO.	*A-BOLTS 12 REQ'D	FACE SPREAD	TOWER TOP		30 FEET BELOW TOP		DOWNLOAD (POUNDS)	UPLIFT (POUNDS)	TOTAL SHEAR (POUNDS)	OTM (FOOT POUNDS)
						ROUNDS	OR FLATS	ROUNDS	OR FLATS				
SS040D80EXC	40	1W	2W	SB2	1' 6	5.8	3.5	8.3	5.0	10,750	10,270	650	13,620
SS060D80EXC	60	1W	3WN	SB3	1' 10	4.2	2.5	5.8	3.5	16,230	15,530	750	25,070
SS080D80EXC	80	1W	4N	SB4	2' 2	3.3	2.0	5.0	3.0	23,060	22,010	980	42,180

* ANCHOR BOLTS OR BASE PART NO.

GENERAL NOTES

1. TOWER DESIGNS ARE IN ACCORDANCE WITH APPROVED NATIONAL STANDARD ANSI/EIA-222-E (NO ICE).
2. EQUIVALENT FLAT-PLATE ANTENNA AREAS, BASED ON EIA RS-222-C, MUST NOT EXCEED THE AREAS SHOWN FOR FLAT MEMBER ANTENNAS.
3. TOWER DESIGNS ASSUME ALLOWABLE PROJECTED AREAS ARE SYMMETRICALLY PLACED ON THE TOWER.
4. DESIGNS ASSUME ONE 7/8 LINE TO TOP AND TWO 7/8 LINES TO 30 FEET BELOW TOP, ONE PER FACE.
5. DO NOT INSTALL OR DISMANTLE TOWERS WITHIN FALLING DISTANCE OF ELECTRICAL AND/OR TELEPHONE LINES.
6. TOWER ERECTION AND DISMANTLING MUST BE BY QUALIFIED AND EXPERIENCED PERSONNEL.
7. INSTALL WARNING PLATE (P/N ACWS) IN A HIGHLY VISIBLE LOCATION.
8. ALL ANTENNA INSTALLATIONS MUST BE GROUNDED IN ACCORDANCE WITH LOCAL AND NATIONAL CODES.
9. FOR SECTION ASSEMBLY DETAILS AND PART NUMBERS SEE DRAWING E690800.
10. FOR ADDITIONAL BRACING, GROUTING AND DRAINAGE DETAILS SEE DRAWING SK720305.
11. FOR TAPERED TOP DETAILS SEE DRAWING SK670407.
12. ALL TOWERS PROVIDED WITH (P/N 1TT) TAPERED TOP.
13. FOR STEP BOLT DETAILS SEE DRAWING B651264.
14. FOR FOUNDATION DETAILS SEE DRAWING D870480.

No.	Revision Description	Date	Rev By	Ckd By	Appd By
R1	REV'D EIA-222-D TO EIA-222-E	9-10-91	RKB		

ROHN

Scale: NONE	By	Date
Drawn:	RKB	12-9-88
Checked:	GPW	12-14-88
App. Eng.:	RAM	12-21-88
App. Sales:	PM	12-22-88

Title: 40' - 80' MODEL SSV TOWERS 80MPH WIND SPEED ANSI/EIA 222 E (NO ICE)

ENG. FILE:

DRAWING NO.: C881240 R1

Parts List P-572
(Replaces P-556)

SELF-SUPPORTING TOWER
80 MPH Basic Wind Speed (No Ice)
(1W at Top – ANSI/EIA 222 E, Exposure C)

		Tower Height		
Item & Part Number	**Wt.**	40′	60′	80′
Tapered Top 1TT	20	1	1	1
18′ Welded Straight Section 1W	107	1	1	1
20′ Welded Tapered Section 2W	153	1	1	1
20′ Welded Tapered Section 3WN	235		1	1
20′ Knock Down Tapered Section 4N	470			1
Base Grounding Kit BGKE	10	2	2	2
Short Base Section SB2	45	1		
Short Base Section SB3	58		1	
Short Base Section SB4	100			1
Anti-Climb Warning Sign ACWS		1	1	1
Tower Weight		345	593	1105

See applicable drawings for foundation and loading details.

Installation information is also included with the tower material.

All types of antenna installations should be thoroughly inspected by qualified personnel and re-marked with hazard and warning labels at least twice a year to insure safety and proper performance.

ANCHOR BOLT TEMPLATE INFORMATION

ASSEMBLY PART NO.	TEMPLATE PT. NO. TOP	TEMPLATE PT. NO. BOTTOM	ANCHOR BOLTS (12 REQ'D.)	BASE FLANGE SIZE	TOWER BASE SECTION (SEE TOWER ASS'Y. FOR EXACT P/N)
6NAB	(3)VL25T	(3)VL25B	5/8 X 30"	5 X 5 X 3/4"	6N, 7N, 8N, 9N, 9NH
6NABD	(3)VL25T	(3)VL25B	5/8 X 42"	5 X 5 X 3/4"	6N, 7N, 8N, 9N, 9NH
10NAB	(3)VL26T	(3)VL26B	3/4 X 36"	6 X 6 X 3/4"	10N, 10NH
10NABD	(3)VL26T	(3)VL26B	3/4 X 48"	6 X 6 X 3/4"	10N, 10NH
11NAB	(3)VL27T	(3)VL27B	7/8 X 42"	7 X 7 X 1"	11N, 12N, 12NH, 13N, 13NH
11NABD	(3)VL27T	(3)VL27B	7/8 X 60"	7 X 7 X 1"	11N, 12N, 12NH, 13N, 13NH
14NAB	(3)VL28T	(3)VL28B	1 X 48"	9 1/2 X 9 1/2 X 1 1/4"	14N, 14NH, 15N, 16N
15NHAB	(3)VL28T	(3)VL28B	1 X 72"	9 1/2 X 9 1/2 X 1 1/4"	15NH, 16NH
15NHABD	(3)VL28T	(3)VL28B	1 X 78"	9 1/2 X 9 1/2 X 1 1/4"	14N, 14NH, 15N, 15NH, 16N, 16NH

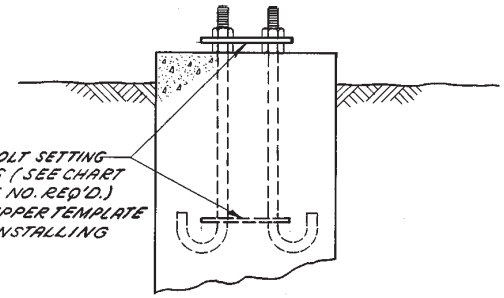

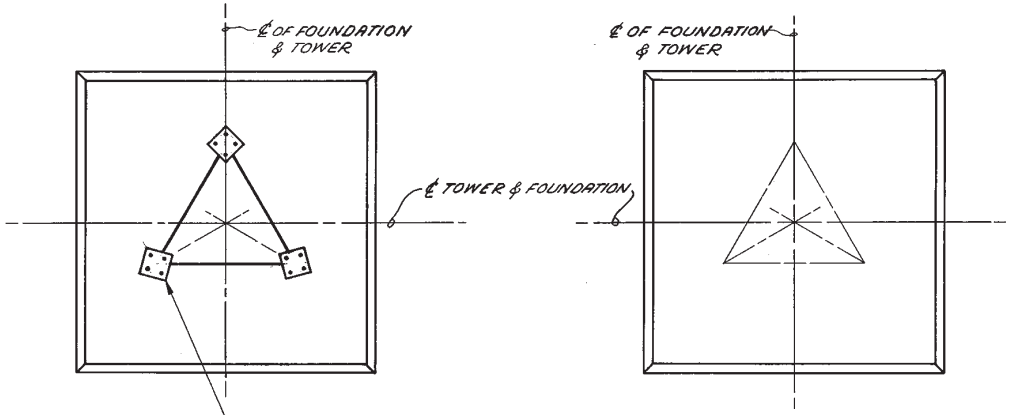

NOTES

1. IT IS THE RESPONSIBILITY OF THE FOUNDATION CONTRACTOR TO VERIFY THAT THE CORRECT SETTING TEMPLATE & FOUNDATION DWG. ARE BEING USED.
2. CHECK ANCHOR BOLT SIZE, NO., SPACING, & BOLT CIRCLE DIA. ON TEMPLATE AGAINST ANCHOR BOLT LAYOUT DRAWINGS BEFORE INSTALLATION.
3. BOLT TEMPLATES AVAILABLE FOR SECTIONS 6N THRU 16N OR 16NH.
4. ALLOW FOR DRAINAGE OF ALL PIPE LEG TOWER SECTIONS.
5. PART NO. IN CHART AT UPPER LEFT CONSISTS OF 12 ANCHOR BOLTS & 6 TEMPLATES.

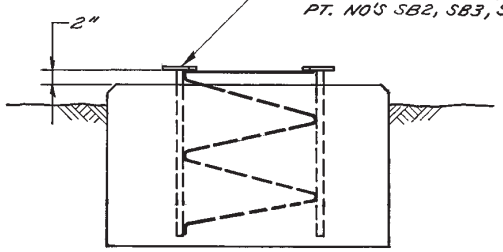

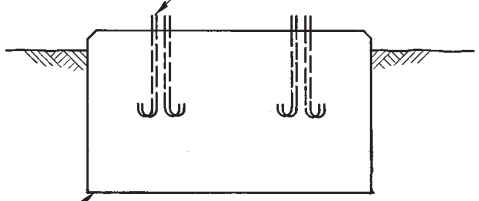

PAD FOUNDATION FOR SECTIONS 1W-10N
3 PIER & PAD FOUNDATIONS FOR SECTIONS 7N THRU 16N OR 16NH

NOTE: SEE DWG. NO. B 740973 FOR TEMPLATE FABRICATION DETAILS.

NO.	DESCRIPTION	DATE	BY
R3	ADDED 'D' AB'S & REVISED PAD FDN.	3-17-88	JHD
R2	RE-DRAWN (REPLACES CU-730104 R1)	2-14-75	OH

REVISIONS

ROHN® MANUFACTURING
DIVISION OF UNARCO

TITLE ANCHOR BOLT SETTING TEMPLATE INFORMATION & SHORT BASE DETAILS

FILE NO.

SCALE | MATERIAL | FINISH | WT.

DWN. BY OH DATE 2-14-75
CK'D. BY WDU DATE 4-1-75
APP'D. ENG'G. CW DATE 4-1-75
APP'D. SALES MBK DATE 7-1-75

UNLESS OTHERWISE SPECIFIED. DIMENSIONS ARE GIVEN IN INCHES.
TOLERANCES: DEC. ± FRAC. ± ANGLES ±

DWG. NO. CU 730104 R3

GAF 880-250 2-72 48194

PRINTED IN U.S.A.

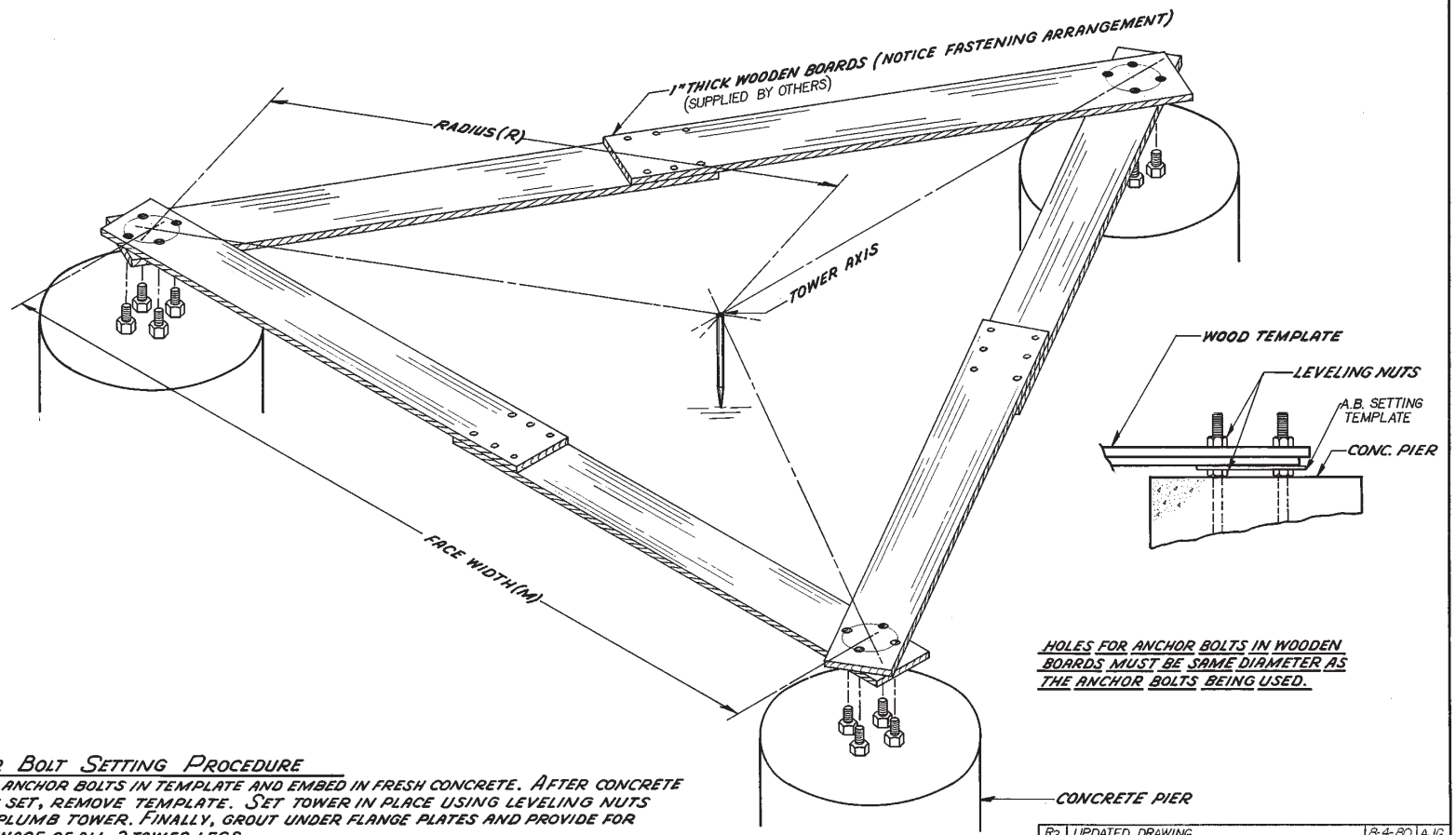

HOLES FOR ANCHOR BOLTS IN WOODEN BOARDS MUST BE SAME DIAMETER AS THE ANCHOR BOLTS BEING USED.

ANCHOR BOLT SETTING PROCEDURE

SET ANCHOR BOLTS IN TEMPLATE AND EMBED IN FRESH CONCRETE. AFTER CONCRETE HAS SET, REMOVE TEMPLATE. SET TOWER IN PLACE USING LEVELING NUTS TO PLUMB TOWER. FINALLY, GROUT UNDER FLANGE PLATES AND PROVIDE FOR DRAINAGE OF ALL 3 TOWER LEGS.

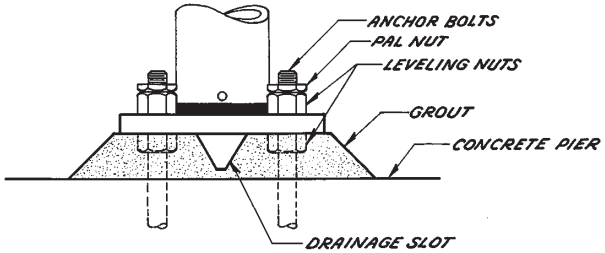

NOTE: ANCHOR BOLT ORIENTATION SHOWN ABOVE IS ONLY FOR SECTIONS 6N THRU 16N STANDARD OR HEAVY SERIES.

No. ▲	Revision Description	▲Date	▲By
R2	UPDATED DRAWING	8-4-80	AJG
R1	ADDED NOTE	4-12-77	

Unarco-Rohn
Division of Unarco Industries, Inc.

Title: ANCHOR BOLT SETTING PROCEDURE FOR SELF-SUPPORTING TOWERS

Scale: NONE

Unless otherwise specified, dimensions are given in inches. Tolerances: Decimals ±, Fractions ±, Angles ±

Drawn by: OH, Date: 10-11-71
Checked by: TS, Date: 10-13-71
Approved by Engineering: EAI, Date: 10-13-71
Approved by Production: Date
Approved by Sales: RAH, Date: 11-1-71

Material | Finish | Weight

File Number

Drawing Number: C711017 R2

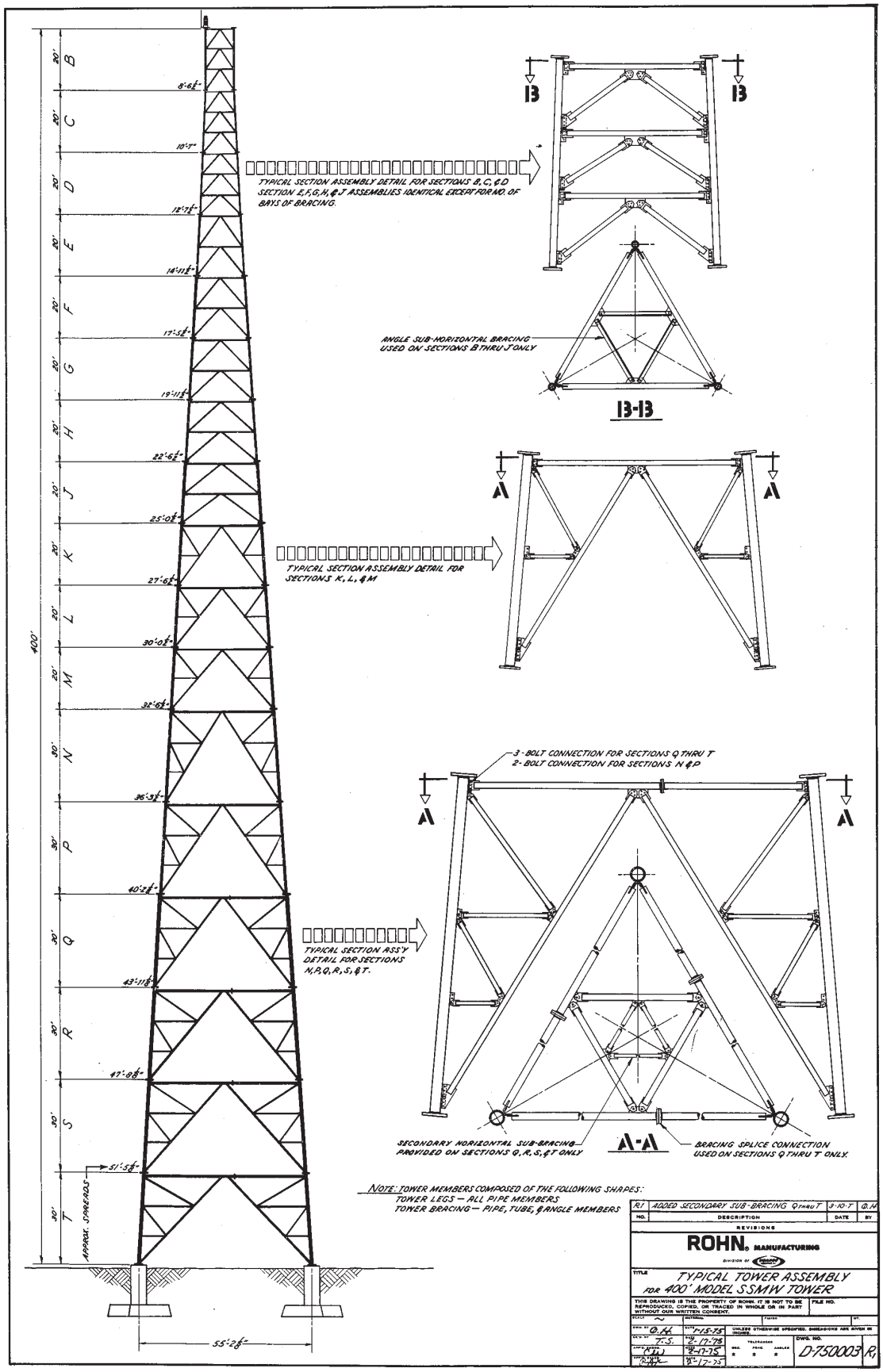
400'
B
C
D
E
F
G
H
J
K
L
M
N
P
Q
R
S
T
20'
30'
8'-6⅞"
10'-7"
12'-7⅞"
14'-11⅞"
17'-5⅞"
19'-11⅞"
22'-6⅞"
25'-0⅞"
27'-6⅞"
30'-0⅞"
32'-6⅞"
36'-3⅞"
40'-2⅞"
43'-11⅞"
47'-8⅞"
51'-5⅞"
APPROX. SPREADS
55'-2⅞"
TYPICAL SECTION ASSEMBLY DETAIL FOR SECTIONS B, C, & D
SECTION E, F, G, H, & J ASSEMBLIES IDENTICAL EXCEPT FOR NO. OF BAYS OF BRACING.
B
B
ANGLE SUB-HORIZONTAL BRACING USED ON SECTIONS B THRU J ONLY
B-B
TYPICAL SECTION ASSEMBLY DETAIL FOR SECTIONS K, L, & M
A
A
3-BOLT CONNECTION FOR SECTIONS Q THRU T
2-BOLT CONNECTION FOR SECTIONS N & P
TYPICAL SECTION ASS'Y DETAIL FOR SECTIONS N, P, Q, R, S, & T.
SECONDARY HORIZONTAL SUB-BRACING PROVIDED ON SECTIONS Q, R, S, & T ONLY
A-A
BRACING SPLICE CONNECTION USED ON SECTIONS Q THRU T ONLY.
NOTE: TOWER MEMBERS COMPOSED OF THE FOLLOWING SHAPES:
TOWER LEGS — ALL PIPE MEMBERS
TOWER BRACING — PIPE, TUBE, & ANGLE MEMBERS
R1 ADDED SECONDARY SUB-BRACING Q THRU T 3-10-T G.H
NO. DESCRIPTION DATE BY
REVISIONS
ROHN® MANUFACTURING
DIVISION OF ALLIED PRODUCTS
TITLE
TYPICAL TOWER ASSEMBLY
FOR 400' MODEL SSMW TOWER
THIS DRAWING IS THE PROPERTY OF ROHN. IT IS NOT TO BE REPRODUCED, COPIED, OR TRACED IN WHOLE OR IN PART WITHOUT OUR WRITTEN CONSENT.
FILE NO.
SCALE ~
MATERIAL
FINISH
WT.
DRN BY G.H. 7-15-75
UNLESS OTHERWISE SPECIFIED, DIMENSIONS ARE GIVEN IN INCHES
CHK'D BY T.S. 8-17-75
APP'D BY 8-17-75
8-17-75
TOLERANCES
DEC. FRAC. ANGLES
DWG. NO.
D-750003 R1

ROHN™ Products

SCL Tower

Products for a Growing World of Technology

Blank

ROHN SCL

TABLE OF CONTENTS

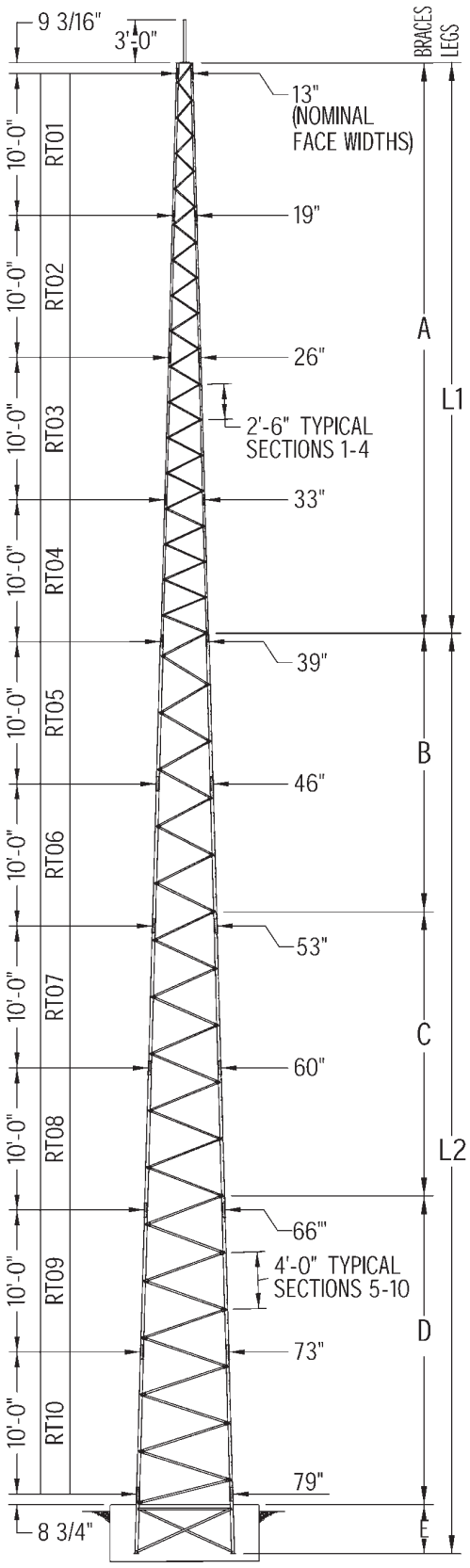

MEMBER SIZE TABLE

MEMBER TYPE	DESIGNATION	DESCRIPTION	END CONNECTION
LEGS	L1	60° CHANNEL, 1/8" THICK	(6) 5/16"Ø ⟨1⟩
	L2	60° CHANNEL, 3/16" THICK	(8) 3/8"Ø
BRACES	A	1" O.D. TUBING, 18GA	SEE NOTE ⟨2⟩
	B	1 1/4" O.D. TUBING, 16GA	
	C	1 1/4" O.D. TUBING, 14GA	
	D	1 1/2" O.D. TUBING, 12GA	
	E	1 1/2" ANGLE, 1/8" THICK	
TOP MAST	N/A	1 1/2" SCH40, PIPE	(4) 1/2"Ø

1) AT THE TRANSITION FROM LEG L1 TO L2, (8) 5/16"Ø BOLTS SHALL BE USED.
2) BRACE CONNECTIONS TO 1/8" THICK LEGS SHALL BE 5/16"Ø, BRACE CONNECTIONS TO 3/16" THICK LEGS SHALL BE 3/8"Ø.

TOWER DESIGN LOADING

ACCORDING TO ANSI/TIA/EIA-222-F-1996
SEE SHEET 2 FOR DESIGN GENERAL NOTES

TOWER HEIGHT	RT SECTION OPTIONS	PART NUMBER	ALLOWABLE EFFECTIVE PROJECTED AREA (FT²) BASIC WIND SPEED (MPH) FASTEST-MILE [3-SECOND GUST]			
			75 [90]	80 [100]	90 [110]	100 [120]
100'	1 - 10	SCL100TSB	8	2	-	-
90'	2 - 10	SCL090BSB	18	10	-	-
	1 - 9	SCL090TSB	14	10	-	-
80'	3 - 10	SCL080BSB	30	20	8	-
	1 - 8	SCL080TSB	15	11	5	-
70'	4 - 10	SCL070BSB	35	30	19	8
	1 - 7	SCL070TSB	16	12	6	2
60'	1 - 6	SCL060TSB	17	13	7	2.5
50'	1 - 5	SCL050TSB	19	14	8	3.5
40'	1 - 4	SCL040TSB	20	15	9	4

SCL DESIGN LOADING

ROHN Products, Inc.
Frankfort • Indiana

DRAWING NUMBER	REV.	SHEET	DATE	DRAWN BY
AF020128	0	1 OF 2	5/2/02	EJM
			CHECKED BY JWB 6/5	APPROVED HA 6/10

DESIGN GENERAL NOTES

1) TOWER DESIGNS CONFORM TO THE APPROVED NATIONAL STANDARD ANSI/TIA/EIA-222-F-1996 FOR THE BASIC WIND SPEEDS INDICATED WITHOUT ICE. TOWER DESIGNS ALSO CONFORM TO THE ANSI/TIA/EIA STANDARD FOR A ½ INCH RADIAL ICE LOAD OCCURRING SIMULTANEOUSLY WITH 75% OF THE NO ICE DESIGN WIND PRESSURES. THE APPROPRIATE DESIGN CRITERIA FOR A SITE MUST BE VERIFIED BY OTHERS PRIOR TO INSTALLATION.
2) ANTENNAS AND MOUNTS ARE ASSUMED TO BE SYMMETRICALLY MOUNTED AT OR BELOW THE TOP OF THE TOWER FOR DETERMINING OVERALL REACTIONS AND MEMBER FORCES. DESIGN ASSUMES THE WEIGHT OF ANTENNAS AND MOUNTS DO NOT EXCEED 300 POUNDS. LOCAL STRESSES DUE TO MOUNTING ARRANGEMENTS FOR SITE-SPECIFIC APPLICATIONS HAVE NOT BEEN CONSIDERED AND MUST BE INVESTIGATED BY OTHERS ON AN INDIVIDUAL SITE BASIS.
3) THE ALLOWABLE EFFECTIVE PROJECTED AREAS INDICATED INCLUDE THE SUMMATION OF THE PROJECTED AREAS OF ANTENNAS AND MOUNTS MUTLIPLIED BY THEIR APPROPRIATE DRAG FACTORS. THE ALLOWABLE EFFECTIVE PROJECTED AREAS ARE BASED ON APPLICATIONS WITHOUT THE USE OF ANTI-CLIMB PANELS. THE USE OF ANTI-CLIMB PANELS WILL REDUCE THE ALLOWABLE EFFECTIVE PROJECTED AREAS INDICATED. WHEN ½ INCH OF RADIAL ICE IS TO BE CONSIDERED FOR AN APPLICATION, THE ADDITIONAL EFFECTIVE PROJECTED AREA OF THE ICE ON ANTENNAS AND MOUNTS SHALL BE INCLUDED IN THE SUMMATION.
4) DESIGN ASSUMES MAXIMUM TOP MAST LOAD IS LIMITED TO 5 SQUARE FEET EFFECTIVE PROJECTED AREA AND 100 POUNDS VERTICAL LOAD. ALL OTHER LOADING IS ASSUMED TO BE MOUNTED BELOW THE TOP MAST.
5) TOWER DESIGNS ASSUME A ½ INCH TRANSMISSION LINE FOR EACH 10 SQUARE FEET OF EFFECTIVE PROJECTED AREA UP TO A MAXIMUM OF THREE LINES, ONE LINE PER TOWER FACE.
6) TOWER DESIGNS DO NOT INCLUDE STRESSES DUE TO ERECTION SINCE ERECTION EQUIPMENT AND CONDITIONS ARE UNKNOWN. DESIGN ASSUMES COMPETENT AND QUALIFIED PERSONNEL WILL ERECT (OR DISMANTLE) THE TOWER IN ACCORDANCE WITH THE ANSI/TIA/EIA STANDARD.
7) THE MINIMUM YIELD STRENGTH OF STRUCTURAL STEEL MEMBERS SHALL BE EQUAL TO 50 KSI WITH THE EXCEPTION OF PLATES AND ANGLES, WHICH SHALL BE 36 KSI. ALL BOLTS SHALL BE SAE GRADE 5 WITH LOCK WASHERS TO BE USED AS NUT LOCKING DEVICES.
8) ALL MEMBERS AND HARDWARE SHALL BE HOT DIP GALVANIZED IN ACCORDANCE WITH THE ANSI/TIA/EIA STANDARD.
9) TOWER DESIGN ASSUMES THAT AS A MINIMUM, MAINTENANCE AND INSPECTION WILL BE PERFORMED BY OTHERS OVER THE LIFE OF THE STRUCTURE IN ACCORDANCE WITH THE ANS/TIA/EIA STANDARD.
10) FOUNDATIONS SHALL BE DESIGNED FOR THE CONDITIONS EXISTING AT THE SITE. FOR REACTIONS AND STANDARD MAT FOUNDATIONS DESIGNED IN ACCORDANCE WITH ANSI/TIA/EIA "NORMAL" SOIL, REFER TO DRAWING AF020037.
11) THE TOWER HEIGHTS LISTED IN THE DESIGN LOADING CHART AND THE FACE WIDTHS SHOWN ON THE ELEVATION VIEW ARE NOMINAL DIMENSIONS. ACTUAL TOWER HEIGHTS WILL BE SLIGHTLY HIGHER DUE TO THE SHORT BASE, AND TOP PLATE ASSEMBLY.

SCL DESIGN LOADING			ROHN Products, Inc. Frankfort • Indiana	
DRAWING NUMBER AF020128	REV. 0	SHEET 2 OF 2	DATE 5/2/02	DRAWN BY EJM
THIS DRAWING IS THE PROPERTY OF ROHN. IT IS NOT TO BE COPIED, TRACED, OR REPRODUCED IN ANY FORM WITHOUT OUR WRITTEN CONSENT.			CHECKED BY JWB 6/5	APPROVED HA 6/10

TOP PLATE ASSEMBLY	(1) TOP PLATE WELDMENT (1) MAST - 1-1/2" SCH40 PIPE (1.9" O.D.) (3) BRACES - 1" O.D., 18GA TUBING (4) BOLTS - 1/2" X 1-1/4" W/ SPLIT LOCK & NUT (3) BOLTS - 5/16" X 1" W/ SPLIT LOCK & NUT
RT01	(3) LEGS - 1/8" THICK, 60v CHANNEL (24) BRACES - 1" O.D., 18GA TUBING (24) BOLTS - 5/16" X 1" (24) WASHER - 5/16" SPLIT LOCK (24) NUT - 5/16" HEX
RT02	(3) LEGS - 1/8" THICK, 60v CHANNEL (24) BRACES - 1" O.D., 18GA TUBING (24) BOLTS - 5/16" X 1" (24) WASHER - 5/16" SPLIT LOCK (24) NUT - 5/16" HEX
RT03	(3) LEGS - 1/8" THICK, 60v CHANNEL (24) BRACES - 1" O.D., 18GA TUBING (24) BOLTS - 5/16" X 1" (24) WASHER - 5/16" SPLIT LOCK (24) NUT - 5/16" HEX
RT04	(3) LEGS - 1/8" THICK, 60v CHANNEL (21) BRACES - 1" O.D., 18GA TUBING (3) BRACES - 1-1/4" O.D., 16GA TUBING (24) BOLTS - 5/16" X 1" (24) WASHER - 5/16" SPLIT LOCK (24) NUT - 5/16" HEX
RT05	(3) LEGS - 3/16" THICK, 60v CHANNEL (15) BRACES - 1-1/4" O.D., 16GA TUBING (15) BOLTS - 3/8" X 1-1/4" (15) WASHER - 3/8" SPLIT LOCK (15) NUT - 3/8" HEX
RT06	(3) LEGS - 3/16" THICK, 60v CHANNEL (12) BRACES - 1-1/4" O.D., 16GA TUBING (3) BRACES - 1-1/4" O.D., 14GA TUBING (15) BOLTS - 3/8" X 1-1/4" (15) WASHER - 3/8" SPLIT LOCK (15) NUT - 3/8" HEX
RT07	(3) LEGS - 3/16" THICK, 60v CHANNEL (15) BRACES - 1-1/4" O.D., 14GA TUBING (15) BOLTS - 3/8" X 1-1/4" (15) WASHER - 3/8" SPLIT LOCK (15) NUT - 3/8" HEX
RT08	(3) LEGS - 3/16" THICK, 60v CHANNEL (12) BRACES - 1-1/4" O.D., 14GA TUBING (3) BRACES - 1-1/2" O.D., 12GA TUBING (15) BOLTS - 3/8" X 1-1/4" (15) WASHER - 3/8" SPLIT LOCK (15) NUT - 3/8" HEX
RT09	(3) LEGS - 3/16" THICK, 60v CHANNEL (15) BRACES - 1-1/2" O.D., 12GA TUBING (15) BOLTS - 3/8" X 1-1/4" (15) WASHER - 3/8" SPLIT LOCK (15) NUT - 3/8" HEX
RT10	(3) LEGS - 3/16" THICK, 60v CHANNEL (12) BRACES - 1-1/2" O.D., 12GA TUBING (12) BOLTS - 3/8" X 1-1/4" (12) WASHER - 3/8" SPLIT LOCK (12) NUT - 3/8" HEX
SHORT BASE	(3) LEGS - 3/16" THICK, 60v CHANNEL (9) BRACES - 1-1/2" X 1-1/2" X 1/8" ANGLE (15) BOLTS - 3/8" X 1-1/4" (15) WASHER - 3/8" SPLIT LOCK (15) NUT - 3/8" HEX

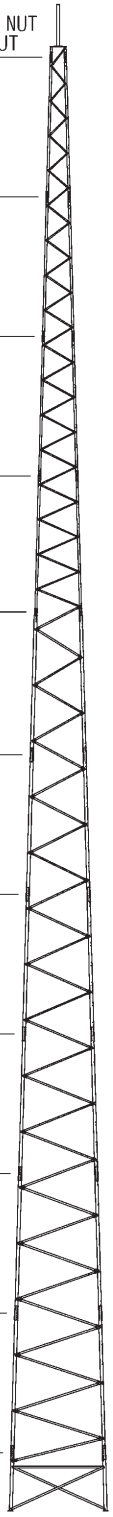

GENERAL NOTES

1) ASSEMBLY (OR DISMANTLING) SHALL BE BY COMPETENT AND QUALIFIED PERSONNEL IN ACCORDANCE WITH ANSI/TIA/EIA-222-F 1996 "STRUCTURAL STANDARDS FOR STEEL ANTENNA TOWERS AND ANTENNA SUPPORTING STRUCTURES."
2) SECTIONS ARE AVAILABLE AS ASSEMBLED SECTIONS OR AS KNOCKDOWN COMPONENTS. (KNOCKDOWN SECTION KITS ARE IDENTIFIED WITH A "K" ADDED TO THE END OF THE SECTION PART NUMBER.)
3) TOWER LOADING SHALL NOT EXCEED THE LOADING INDICATED ON DRAWING AF020128.
4) TOWER SHALL NOT BE INSTALLED WITHIN FALLING DISTANCE OF ELECTRICAL OR TELEPHONE LINES.
5) PART NUMBERS ARE STAMPED ON ALL LEG AND BRACE MEMBERS. REFER TO SHEET 2 FOR SECTION ASSEMBLY DETAILS.
6) FIELD CONNECTIONS SHALL BE BOLTED WITH LOCK WASHERS, NO FIELD WELDING SHALL BE ALLOWED.
7) TOWER OBSTRUCTION MARKING, IF REQUIRED, SHALL BE IN CONFORMANCE WITH LOCAL, STATE AND FEDERAL REQUIREMENTS.
8) GROUNDING SHALL BE IN ACCORDANCE WITH LOCAL AND NATIONAL CODES. NUMBER OF BGK3G GROUNDING KITS ARE BASED ON FACE WIDTH. SEE BILL OF MATERIAL ON SHEET 3 FOR QTY. SUPPLIED. REFER TO DRAWING AF020142 FOR INSTALLATION DETAILS. ADDITIONAL GROUNDING MATERIAL MAY BE REQUIRED BASED ON SITE-SPECIFIC CONDITIONS AND REQUIREMENTS.
9) WARNING PLATE (P/N ACWS) SHALL BE INSTALLED IN A HIGHLY VISIBLE LOCATION ON THE TOWER.
10) STEP BOLTS WITH CLIMBER ANCHORAGES ARE AVAILABLE AS AN OPTION FOR CLIMBING THE ENTIRE HEIGHT OF THE TOWER. REFER TO DRAWING AF020095 FOR DETAILS.
11) A ROHN-LOC SAFETY DEVICE ASSEMBLY IS AVAILABLE AS AN OPTION FOR CLIMBING THE LEG OF THE TOWER. REFER TO DRAWING AF020141 FOR DETAILS.
12) SEE DRAWING AF020037 FOR SHORT BASE DETAILS, REACTIONS AND STANDARD MAT FOUNDATION DESIGNS BASED ON ANSI/TIA/EIA "NORMAL" SOIL. PRIOR TO INSTALLING STANDARD FOUNDATIONS, IT SHALL BE VERIFIED THAT ACTUAL SITE SOIL PARAMETERS EQUAL OR EXCEED "NORMAL" SOIL PARAMETERS.

SCL ASSEMBLY DRAWING			ROHN Products, Inc. Frankfort • Indiana	
DRAWING NUMBER AF020140	REV. 0	SHEET 1 OF 3	DATE 4/3/02	DRAWN BY EJM
THIS DRAWING IS THE PROPERTY OF ROHN. IT IS NOT TO BE COPIED, TRACED, OR REPRODUCED IN ANY FORM WITHOUT OUR WRITTEN CONSENT.			CHECKED BY JWB 6/5	APPROVED HA 6/10

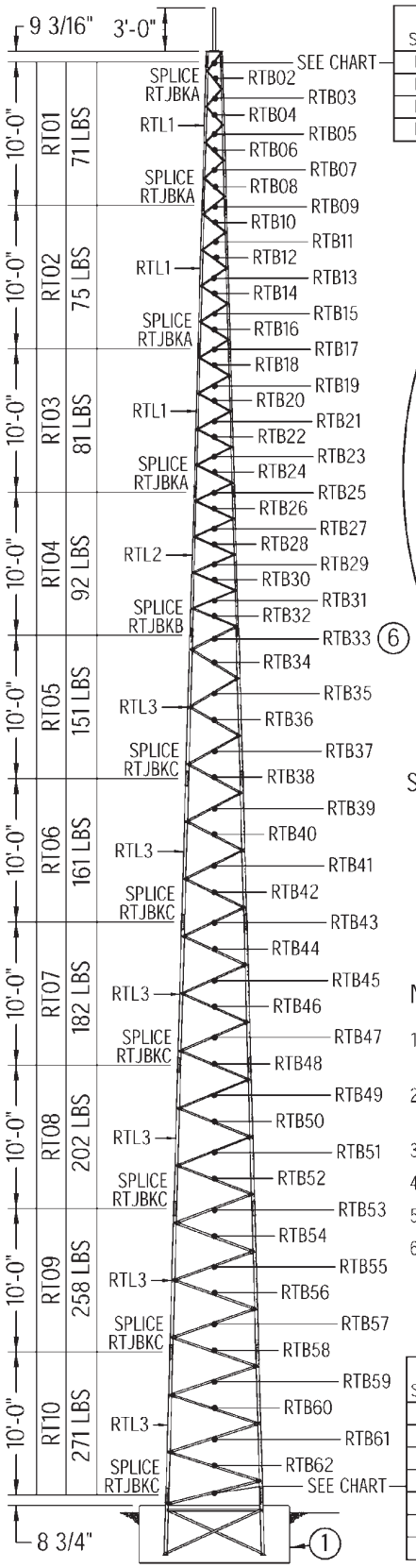

TOP SECTION	BRACE
RT01TP	RTB01
RT02TP	RTB09
RT03TP	RTB17
RT04TP	RTB25

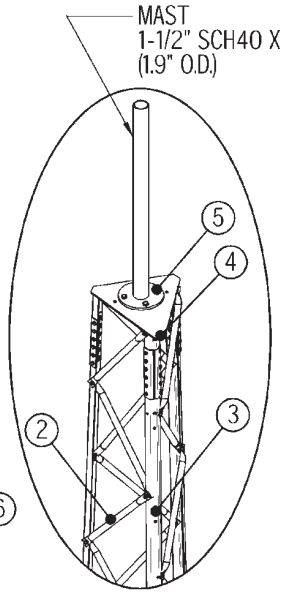

TOWER TOP DETAIL
SECTIONS RT01 TO RT04

RTJBKA - BILL OF MATERIAL

(6) OUTSIDE PLATES (RTS1A)
(6) INSIDE PLATES (RTS1B)
(36) 5/16" BOLTS, LOCK WASHERS AND HEX NUTS

RTJBKA INCLUDES ALL SPLICE PLATES AND HARDWARE FOR (3) LEGS.

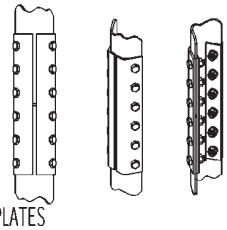

RTJBKA

RTJBKB - BILL OF MATERIAL

(3) LEFT SIDE PLATES (RTS2A)
(3) RIGHT SIDE PLATES (RTS2B)
(24) 5/16" BOLTS, LOCK WASHERS AND HEX NUTS
(24) 3/8" BOLTS, LOCK WASHERS AND HEX NUTS

RTJBKB INCLUDES ALL SPLICE PLATES AND HARDWARE FOR (3) LEGS.

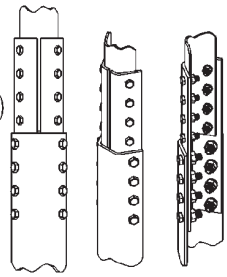

RTJBKB

RTJBKC - BILL OF MATERIAL

(6) OUTSIDE PLATES (RTS3A)
(6) INSIDE PLATES (RTS3B)
(48) 3/8" BOLTS, LOCK WASHERS AND HEX NUTS

RTJBKC INCLUDES ALL SPLICE PLATES AND HARDWARE FOR (3) LEGS.

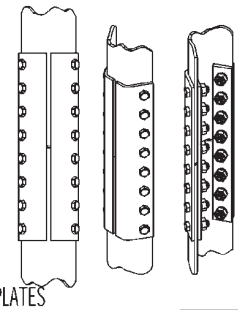

RTJBKC

SECTION SPLICE DETAILS

NOTES

1) HORIZONTAL BRACE IS PROVIDED FOR LEVELING OF SHORT BASE, SEE DRAWING AF020037 FOR STANDARD MAT FOUNDATION DETAILS.
2) ODD NUMBERED BRACES MUST BE ON THE OUTSIDE ORIENTED UPWARD LEFT TO RIGHT FOR ALL SECTIONS.
3) ALIGN LEGS WITH STEP BOLT HOLES TO ONE SIDE OF THE TOWER FOR ALL SECTIONS.
4) ALIGN HOLE OF THE TOP PLATE WITH THE STEP BOLT LEG.
5) TOP MAST IS ATTACHED WITH ½" HARDWARE PROVIDED.
6) BRACE RTB33 SPANS LEG SIZE TRANSITION AND IS SUPPLIED WITH DIFFERENT HOLE SIZES ON EACH END. LARGER HOLE ATTACHES TO LOWER LEG.

BASE SECTION	BRACE
RT10SB	RTB63SB
RT09SB	RTB58SB
RT08SB	RTB53SB
RT07SB	RTB48SB
RT06SB	RTB43SB
RT05SB	RTB38SB
RT04SB	RTB33SB

SCL ASSEMBLY DRAWING

ROHN Products, Inc.
Frankfort • Indiana

DRAWING NUMBER	REV.	SHEET
AF020140	0	2 OF 3

DATE	DRAWN BY
4/3/02	EJM
CHECKED BY	APPROVED
JWB 6/5	HA 6/10

BILL OF MATERIAL

TOWER HEIGHT	RT SECTION OPTIONS	TOWER PART NUMBER	TOTAL WEIGHT (LBS)	SECTIONS										TOP PLATE ASSEMBLY PART #	SHORT BASE PART #	SPLICES			BGK3G QTY
				RT01 QTY	RT02 QTY	RT03 QTY	RT04 QTY	RT05 QTY	RT06 QTY	RT07 QTY	RT08 QTY	RT09 QTY	RT10 QTY			RTJBKA QTY	RTJBKB QTY	RTJBKC QTY	
100'	1 - 10	SCL100TSB	1921	1	1	1	1	1	1	1	1	1	1	RT01TPA	RT10SB	4	1	6	3
90'	2 - 10	SCL090BSB	1848		1	1	1	1	1	1	1	1	1	RT02TPA	RT10SB	3	1	6	3
	1 - 9	SCL090TSB	1651	1	1	1	1	1	1	1	1	1		RT01TPA	RT09SB	4	1	5	3
80'	3 - 10	SCL080BSB	1784			1	1	1	1	1	1	1	1	RT03TPA	RT10SB	2	1	6	3
	1 - 8	SCL080TSB	1358	1	1	1	1	1	1	1	1			RT01TPA	RT08SB	4	1	4	3
70'	4 - 10	SCL070BSB	1720				1	1	1	1	1	1	1	RT04TPA	RT10SB	1	1	6	3
	1 - 7	SCL070TSB	1112	1	1	1	1	1	1	1				RT01TPA	RT07SB	4	1	3	3
60'	1 - 6	SCL060TSB	896	1	1	1	1	1	1					RT01TPA	RT06SB	4	1	2	2
50'	1 - 5	SCL050TSB	699	1	1	1	1	1						RT01TPA	RT05SB	4	1	1	2
40'	1 - 4	SCL040TSB	514	1	1	1	1							RT01TPA	RT04SB	4	1	0	2

SCL ASSEMBLY DRAWING

ROHN Products, Inc.
Frankfort • Indiana

DRAWING NUMBER	REV.	SHEET
AF020140	0	3 OF 3

DATE	DRAWN BY
4/3/02	EJM
CHECKED BY	APPROVED
JWB 6/5	HA 6/10

SHORT BASE REFERENCE CHART

SHORT BASE PART NUMBER	SHORT BASE BILL OF MATERIAL				DIMENSIONS					MAXIMUM BASE REACTIONS	
	LEG P/N (QTY 3)	HORIZONTAL BRACE P/N (QTY 3)	DIAGONAL BRACE P/N (QTY 6)	3/8" HARDWARE QTY	DIMENSION A	DIMENSION B	DIMENSION C	CONCRETE REQ. (CU. YDS)	TOTAL NO. 7 BARS REQ.	MAXIMUM OVERTURNING MOMENT (FT-POUNDS)	MAXIMUM ALLOWABLE SHEAR (POUNDS)
RT04SB	RTW02	RTB34SB	RTB35SB	15	78	39	16	6.3	28	36,500	1,500
RT05SB	RTW02	RTB39SB	RTB40SB	15	102	51	23	10.7	36	89,800	2,000
RT06SB	RTW02	RTB44SB	RTB45SB	15	108	54	23	12.0	40	102,800	3,000
RT07SB	RTW02	RTB49SB	RTB50SB	15	108	54	19	12.0	40	115,700	4,000
RT08SB	RTW02	RTB54SB	RTB55SB	15	114	57	18	13.4	40	128,800	4,500
RT09SB	RTW02	RTB59SB	RTB60SB	15	126	63	20	16.3	44	141,600	5,000
RT10SB	RTW02	RTB64SB	RTB65SB	15	126	63	16	16.3	44	154,400	5,500

SEE SHEET 2 FOR "STANDARD FOUNDATION NOTES"

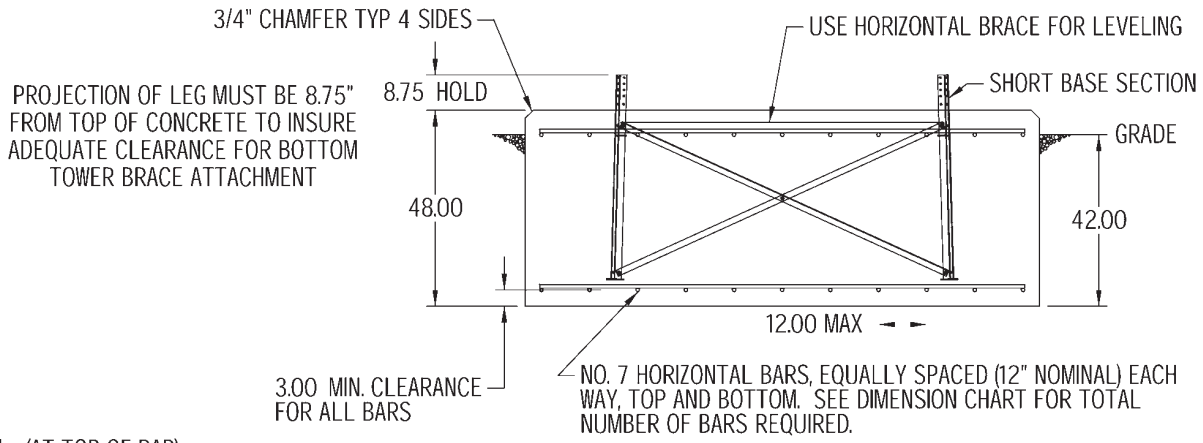

SECTION A-A

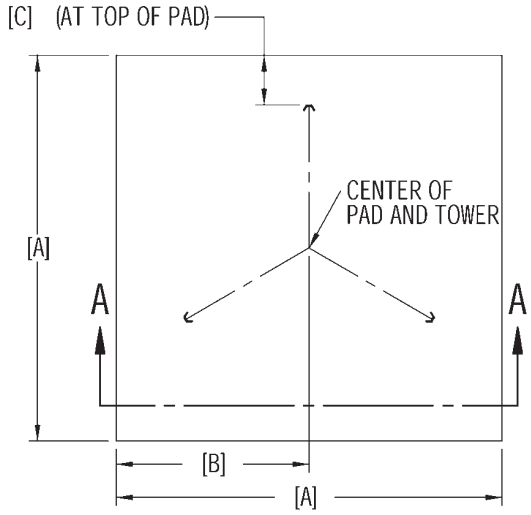

PLAN VIEW

SCL MAT FOUNDATION FOR EIA "NORMAL" SOIL			ROHN Products, Inc. Frankfort • Indiana
DRAWING NUMBER AF020037	REV. 0	SHEET 1 OF 2	DATE 2/21/02 / DRAWN BY EJM
THIS DRAWING IS THE PROPERTY OF ROHN. IT IS NOT TO BE COPIED, TRACED, OR REPRODUCED IN ANY FORM WITHOUT OUR WRITTEN CONSENT.			CHECKED BY JWB 6/5 / APPROVED HA 6/10

STANDARD FOUNDATION NOTES:

1. FOUNDATION DESIGNS ARE IN ACCORDANCE WITH ANSI/TIA/EIA-222-F-1996, "STRUCTURAL STANDARDS FOR STEEL ANTENNA TOWERS AND ANTENNA SUPPORTING STRUCTURES", SECTION 7, FOR "NORMAL" SOIL CONDITIONS. "NORMAL" SOIL IS DEFINED AS DRY, COHESIVE SOIL WITH AN ALLOWABLE NET VERTICAL BEARING CAPACITY OF 4000 PSF AND AN ALLOWABLE NET HORIZONTAL PRESSURE OF 400 PSF PER LINEAL FOOT OF DEPTH TO A MAXIMUM OF 4000 PSF.
2. THE PURCHASER MUST VERIFY THAT ACTUAL SITE SOIL PARAMETERS MEET OR EXCEED E.I.A. "NORMAL" SOIL PARAMETERS AND THAT THE DEPTH OF STANDARD FOUNDATIONS ARE ADEQUATE BASED ON THE FROST PENETRATION AND/OR ZONE OF SEASONAL MOISTURE VARIATION AT THE SITE. FOUNDATION DESIGN MODIFICATIONS MAY BE REQUIRED IN THE EVENT "NORMAL" SOIL PARAMETERS ARE NOT APPLICABLE FOR THE ACTUAL SUBSURFACE CONDITIONS ENCOUNTERED.
3. FOUNDATION DESIGNS ASSUME FIELD INSPECTIONS WILL BE PERFORMED BY THE PURCHASER'S REPRESENTATIVE TO VERIFY THAT CONSTRUCTION MATERIALS, INSTALLATION METHODS, AND ASSUMED DESIGN PARAMETERS ARE ACCEPTABLE BASED ON THE CONDITIONS EXISTING AT THE SITE.
4. WORK SHALL BE IN ACCORDANCE WITH LOCAL CODES, SAFETY REGULATIONS AND UNLESS OTHERWISE NOTED, THE LATEST REVISION OF ACI 318, "BUILDING CODE REQUIREMENTS FOR REINFORCED CONCRETE". PROCEDURES FOR THE PROTECTION OF EXCAVATIONS, EXISTING CONSTRUCTION AND UTILITIES SHALL BE ESTABLISHED PRIOR TO FOUNDATION INSTALLATION.
5. CONCRETE MATERIALS SHALL CONFORM TO THE APPROPRIATE STATE REQUIREMENTS FOR EXPOSED STRUCTURAL CONCRETE.
6. PROPORTIONS OF CONCRETE MATERIALS SHALL BE SUITABLE FOR THE INSTALLATION METHOD UTILIZED AND SHALL RESULT IN DURABLE CONCRETE FOR RESISTANCE TO LOCAL ANTICIPATED AGGRESSIVE ACTIONS. THE DURABILITY REQUIREMENTS OF ACI 318 CHAPTER 4 SHALL BE SATISFIED BASED ON THE CONDITIONS EXPECTED AT THE SITE. AS A MINIMUM, CONCRETE SHALL DEVELOP A MINIMUM COMPRESSIVE STRENGTH OF 3000 PSI IN 28 DAYS.
7. MAXIMUM SIZE OF AGGREGATE SHALL NOT EXCEED SIZE SUITABLE FOR INSTALLATION METHOD UTILIZED OR 1/3 CLEAR DISTANCE BEHIND OR BETWEEN REINFORCING. MAXIMUM SIZE MAY BE INCREASED TO 2/3 CLEAR DISTANCE PROVIDED WORKABILITY AND METHODS OF CONSOLIDATION SUCH AS VIBRATING WILL PREVENT HONEYCOMBS OR VOIDS.
8. REINFORCEMENT SHALL BE DEFORMED AND CONFORM TO THE REQUIREMENTS OF ASTM 615 GRADE 60. SPLICES IN REINFORCEMENT SHALL NOT BE ALLOWED.
9. WELDING IS PROHIBITED ON REINFORCING STEEL AND EMBEDMENTS.
10. MINIMUM CONCRETE COVER FOR REINFORCEMENT SHALL BE 3 INCHES. APPROVED SPACERS SHALL BE USED TO INSURE A 3 INCH MINIMUM COVER ON REINFORCEMENT.
11. FOUNDATION DESIGNS ASSUME STRUCTURAL BACKFILL TO BE COMPACTED IN 8 INCH MAXIMUM LAYERS TO 95% OF MAXIMUM DRY DENSITY AT OPTIMUM MOISTURE CONTENT IN ACCORDANCE WITH ASTM D698. ADDITIONALLY, STRUCTURAL BACKFILL MUST HAVE A MINIMUM COMPACTED UNIT WEIGHT OF 100 POUNDS PER CUBIC FOOT.
12. FOUNDATION INSTALLATION SHALL BE SUPERVISED BY PERSONNEL KNOWLEDGEABLE AND EXPERIENCED WITH THE PROPOSED FOUNDATION TYPE. CONSTRUCTION SHALL BE IN ACCORDANCE WITH GENERALLY ACCEPTED INSTALLATION PRACTICES.
13. LOOSE MATERIAL SHALL BE REMOVED FROM BOTTOM OF EXCAVATION PRIOR TO CONCRETE PLACEMENT. SIDES OF EXCAVATION SHALL BE ROUGH AND FREE OF LOOSE CUTTINGS.
14. CONCRETE SHALL BE PLACED IN A MANNER THAT WILL PREVENT SEGREGATION OF CONCRETE MATERIAL AND OTHER OCCURRENCES WHICH MAY DECREASE THE STRENGTH OR DURABILITY OF THE FOUNDATION.
15. CONCRETE PLACEMENT SHALL BE CONTINUOUS. NO CONSTRUCTION JOINTS SHALL BE ALLOWED.
16. TOP OF FOUNDATION SHALL BE SLOPED TO DRAIN WITH A FLOATED FINISH.
17. EXPOSED EDGES OF CONCRETE SHALL BE CHAMFERED ¾" X ¾" MINIMUM.

SCL MAT FOUNDATION FOR EIA "NORMAL" SOIL			ROHN Products, Inc. Frankfort • Indiana	
DRAWING NUMBER AF020037	REV. 0	SHEET 2 OF 2	DATE 2/21/02	DRAWN BY EJM
THIS DRAWING IS THE PROPERTY OF ROHN. IT IS NOT TO BE COPIED, TRACED, OR REPRODUCED IN ANY FORM WITHOUT OUR WRITTEN CONSENT.			CHECKED BY JWB 6/5	APPROVED HA 6/10

ROHN™ Products

SSV Accessories

Products for a Growing World of Technology

Specifications

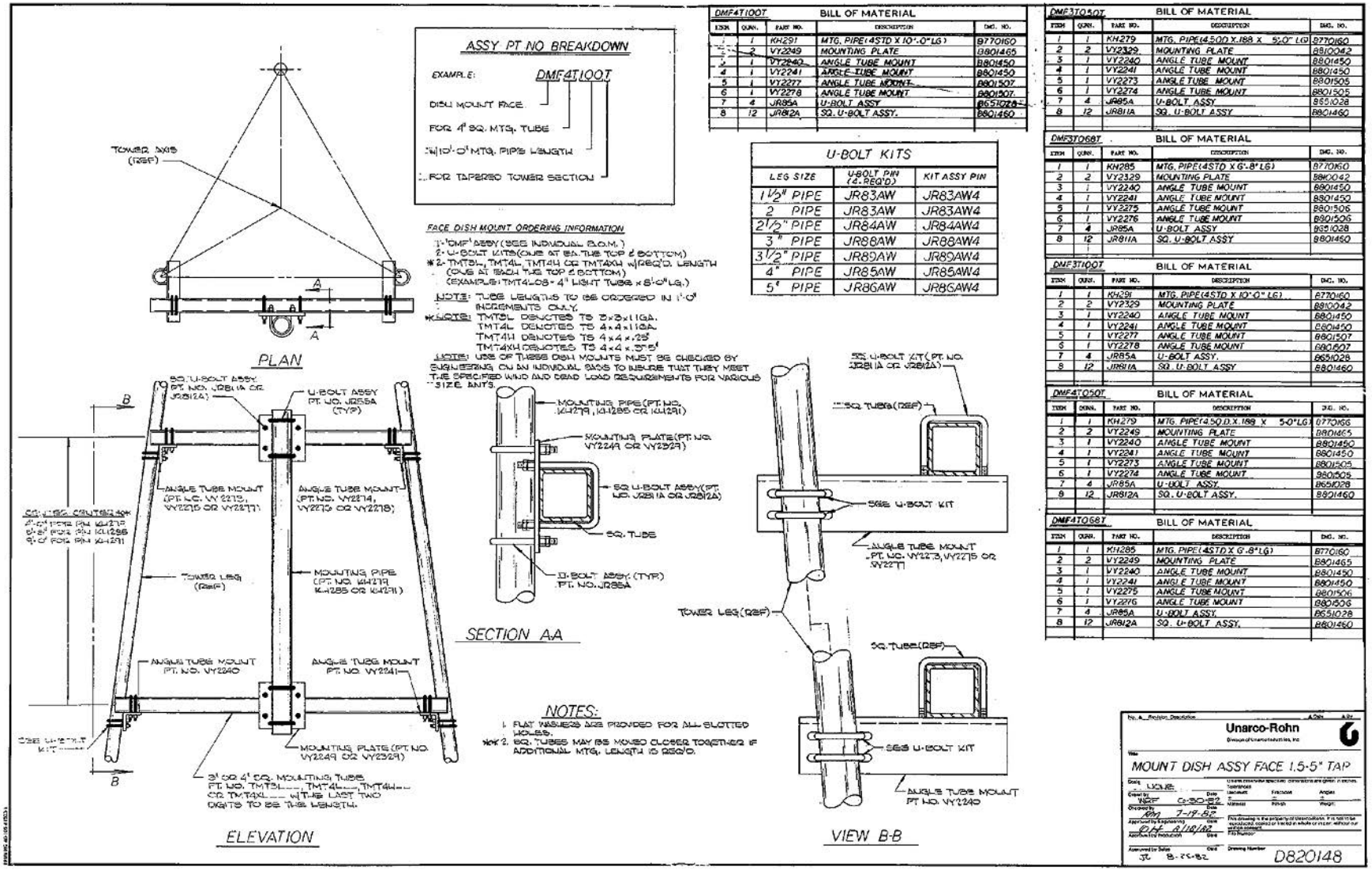

DMF4T100T — BILL OF MATERIAL

ITEM	QUAN.	PART NO.	DESCRIPTION	DWG. NO.
1	1	KH291	MTG. PIPE (4STD X 10'-0" LG)	8770160
2	2	VY2249	MOUNTING PLATE	8801465
3	1	VY2240	ANGLE TUBE MOUNT	8801450
4	1	VY2241	ANGLE TUBE MOUNT	8801450
5	1	VY2277	ANGLE TUBE MOUNT	8801507
6	1	VY2278	ANGLE TUBE MOUNT	8801507
7	4	JR85A	U-BOLT ASSY	8651028
8	12	JR812A	SQ. U-BOLT ASSY.	8801460

U-BOLT KITS

LEG SIZE	U-BOLT P/N (4 REQ'D)	KIT ASSY P/N
1 1/2" PIPE	JR83AW	JR83AW4
2 PIPE	JR83AW	JR83AW4
2 1/2" PIPE	JR84AW	JR84AW4
3" PIPE	JR88AW	JR88AW4
3 1/2" PIPE	JR89AW	JR89AW4
4" PIPE	JR85AW	JR85AW4
5" PIPE	JR86AW	JR86AW4

DMF3T050T — BILL OF MATERIAL

ITEM	QUAN.	PART NO.	DESCRIPTION	DWG. NO.
1	1	KH279	MTG. PIPE (4.500 X .188 X 5'-0" LG)	8770160
2	2	VY2329	MOUNTING PLATE	8810042
3	1	VY2240	ANGLE TUBE MOUNT	8801450
4	1	VY2241	ANGLE TUBE MOUNT	8801450
5	1	VY2273	ANGLE TUBE MOUNT	8801505
6	1	VY2274	ANGLE TUBE MOUNT	8801505
7	4	JR85A	U-BOLT ASSY	8651028
8	12	JR811A	SQ. U-BOLT ASSY	8801460

DMF3T068T — BILL OF MATERIAL

ITEM	QUAN.	PART NO.	DESCRIPTION	DWG. NO.
1	1	KH285	MTG. PIPE (4STD X 6'-8" LG)	8770160
2	2	VY2329	MOUNTING PLATE	8810042
3	1	VY2240	ANGLE TUBE MOUNT	8801450
4	1	VY2241	ANGLE TUBE MOUNT	8801450
5	1	VY2275	ANGLE TUBE MOUNT	8801506
6	1	VY2276	ANGLE TUBE MOUNT	8801506
7	4	JR85A	U-BOLT ASSY	8651028
8	12	JR811A	SQ. U-BOLT ASSY	8801460

DMF3T100T — BILL OF MATERIAL

ITEM	QUAN.	PART NO.	DESCRIPTION	DWG. NO.
1	1	KH291	MTG. PIPE (4STD X 10'-0" LG)	8770160
2	2	VY2329	MOUNTING PLATE	8810042
3	1	VY2240	ANGLE TUBE MOUNT	8801450
4	1	VY2241	ANGLE TUBE MOUNT	8801450
5	1	VY2277	ANGLE TUBE MOUNT	8801507
6	1	VY2278	ANGLE TUBE MOUNT	8801507
7	4	JR85A	U-BOLT ASSY.	8651028
8	12	JR811A	SQ. U-BOLT ASSY	8801460

DMF4T050T — BILL OF MATERIAL

ITEM	QUAN.	PART NO.	DESCRIPTION	DWG. NO.
1	1	KH279	MTG. PIPE 4.50 O.D. X .188 X 5'-0" LG	8770166
2	2	VY2249	MOUNTING PLATE	8801465
3	1	VY2240	ANGLE TUBE MOUNT	8801450
4	1	VY2241	ANGLE TUBE MOUNT	8801450
5	1	VY2273	ANGLE TUBE MOUNT	8801505
6	1	VY2274	ANGLE TUBE MOUNT	8801505
7	4	JR85A	U-BOLT ASSY.	8651028
8	12	JR812A	SQ. U-BOLT ASSY.	8801460

DMF4T068T — BILL OF MATERIAL

ITEM	QUAN.	PART NO.	DESCRIPTION	DWG. NO.
1	1	KH285	MTG. PIPE (4STD X 6'-8" LG)	8770160
2	2	VY2249	MOUNTING PLATE	8801465
3	1	VY2240	ANGLE TUBE MOUNT	8801450
4	1	VY2241	ANGLE TUBE MOUNT	8801450
5	1	VY2275	ANGLE TUBE MOUNT	8801506
6	1	VY2276	ANGLE TUBE MOUNT	8801506
7	4	JR85A	U-BOLT ASSY.	8651028
8	12	JR812A	SQ. U-BOLT ASSY.	8801460

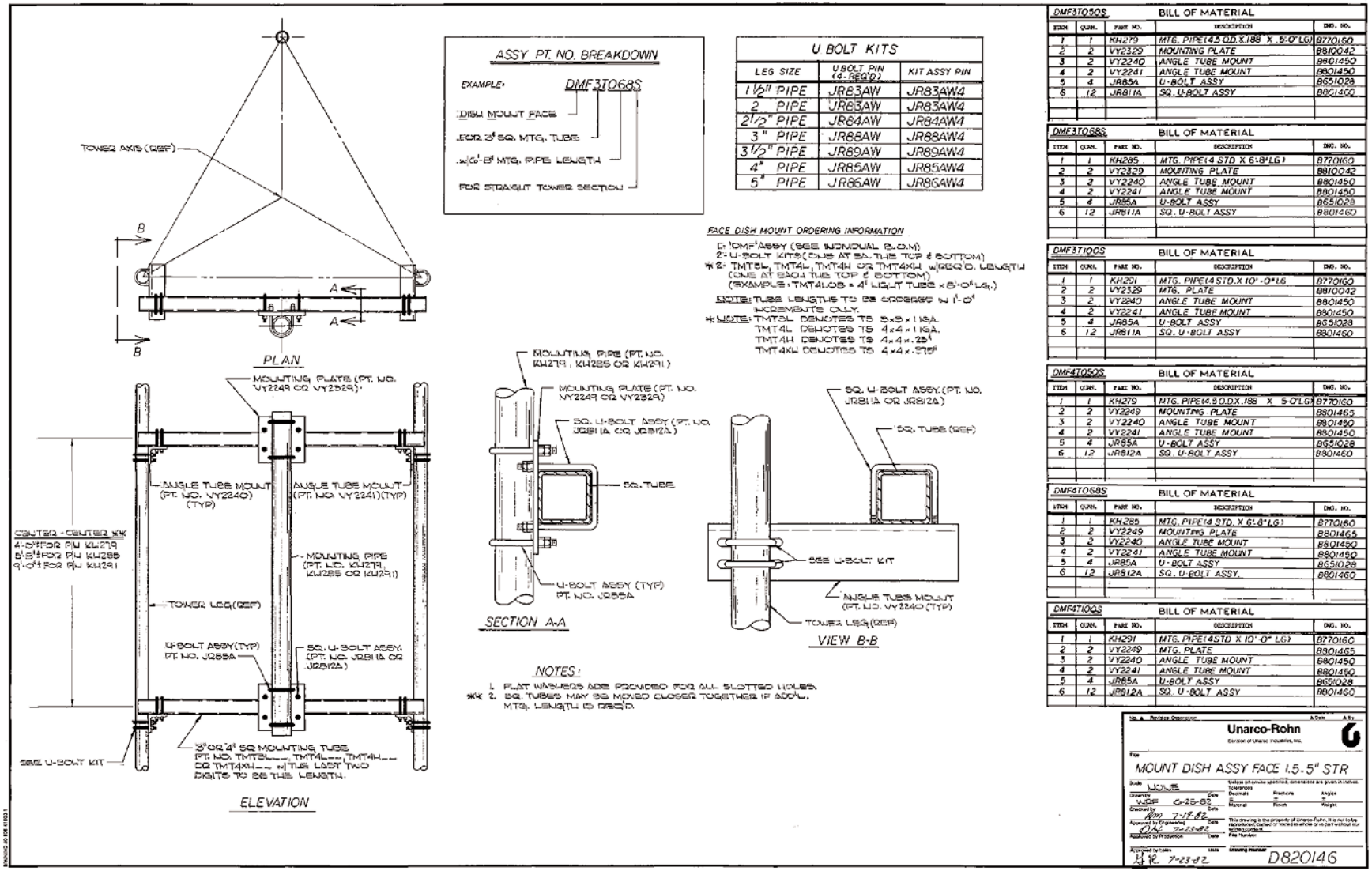

ASSY PT. NO. BREAKDOWN

EXAMPLE: DMF3T068S

- DISH MOUNT FACE
- FOR 3" SQ. MTG. TUBE
- w/6'-8" MTG. PIPE LENGTH
- FOR STRAIGHT TOWER SECTION

U BOLT KITS

LEG SIZE	U BOLT PIN (4-REQ'D)	KIT ASSY PIN
1½" PIPE	JR83AW	JR83AW4
2" PIPE	JR83AW	JR83AW4
2½" PIPE	JR84AW	JR84AW4
3" PIPE	JR88AW	JR88AW4
3½" PIPE	JR89AW	JR89AW4
4" PIPE	JR85AW	JR85AW4
5" PIPE	JR86AW	JR86AW4

FACE DISH MOUNT ORDERING INFORMATION

1- "DMF" ASSY (SEE INDIVIDUAL P.O.M)
2- U-BOLT KITS (ONE AT EA. THE TOP & BOTTOM)
* 2- TMT3L, TMT4L, TMT4H OR TMT4XH W/REQ'D. LENGTH (ONE AT EACH THE TOP & BOTTOM)
(EXAMPLE: TMT4L068 = 4" LIGHT TUBE x 6'-0" LG.)

NOTE: TUBE LENGTHS TO BE ORDERED IN 1'-0" INCREMENTS ONLY.

* NOTE: TMT3L DENOTES TS 3x3x.119A.
TMT4L DENOTES TS 4x4x.119A.
TMT4H DENOTES TS 4x4x.25"
TMT4XH DENOTES TS 4x4x.375"

NOTES:

1. FLAT WASHERS ARE PROVIDED FOR ALL SLOTTED HOLES.
** 2. SQ. TUBES MAY BE MOVED CLOSER TOGETHER IF ADD'L. MTG. LENGTH IS REQ'D.

DMF3T050S — BILL OF MATERIAL

ITEM	QUAN.	PART NO.	DESCRIPTION	DWG. NO.
1	1	KH279	MTG. PIPE (4.5 O.D. X .188 X 5'-0" LG)	B770160
2	2	VY2329	MOUNTING PLATE	B810042
3	2	VY2240	ANGLE TUBE MOUNT	B801450
4	2	VY2241	ANGLE TUBE MOUNT	B801450
5	4	JR85A	U-BOLT ASSY	B651028
6	12	JR811A	SQ. U-BOLT ASSY	B801460

DMF3T068S — BILL OF MATERIAL

ITEM	QUAN.	PART NO.	DESCRIPTION	DWG. NO.
1	1	KH285	MTG. PIPE (4 STD X 6'-8" LG)	B770160
2	2	VY2329	MOUNTING PLATE	B810042
3	2	VY2240	ANGLE TUBE MOUNT	B801450
4	2	VY2241	ANGLE TUBE MOUNT	B801450
5	4	JR85A	U-BOLT ASSY	B651028
6	12	JR811A	SQ. U-BOLT ASSY	B801460

DMF3T100S — BILL OF MATERIAL

ITEM	QUAN.	PART NO.	DESCRIPTION	DWG. NO.
1	1	KH291	MTG. PIPE (4 STD. X 10'-0" LG	B770160
2	2	VY2329	MTG. PLATE	B810042
3	2	VY2240	ANGLE TUBE MOUNT	B801450
4	2	VY2241	ANGLE TUBE MOUNT	B801450
5	4	JR85A	U-BOLT ASSY	B651028
6	12	JR811A	SQ. U-BOLT ASSY	B801460

DMF4T050S — BILL OF MATERIAL

ITEM	QUAN.	PART NO.	DESCRIPTION	DWG. NO.
1	1	KH279	MTG. PIPE (4.50 O.D. X .188 X 5'-0" LG)	B770160
2	2	VY2249	MOUNTING PLATE	B801465
3	2	VY2240	ANGLE TUBE MOUNT	B801450
4	2	VY2241	ANGLE TUBE MOUNT	B801450
5	4	JR85A	U-BOLT ASSY	B651028
6	12	JR812A	SQ. U-BOLT ASSY	B801460

DMF4T068S — BILL OF MATERIAL

ITEM	QUAN.	PART NO.	DESCRIPTION	DWG. NO.
1	1	KH285	MTG. PIPE (4 STD. X 6'-8" LG)	B770160
2	2	VY2249	MOUNTING PLATE	B801465
3	2	VY2240	ANGLE TUBE MOUNT	B801450
4	2	VY2241	ANGLE TUBE MOUNT	B801450
5	4	JR85A	U-BOLT ASSY	B651028
6	12	JR812A	SQ. U-BOLT ASSY.	B801460

DMF4T100S — BILL OF MATERIAL

ITEM	QUAN.	PART NO.	DESCRIPTION	DWG. NO.
1	1	KH291	MTG. PIPE (4 STD X 10'-0" LG)	B770160
2	2	VY2249	MTG. PLATE	B801465
3	2	VY2240	ANGLE TUBE MOUNT	B801450
4	2	VY2241	ANGLE TUBE MOUNT	B801450
5	4	JR85A	U-BOLT ASSY	B651028
6	12	JR812A	SQ. U-BOLT ASSY	B801460

U-BOLT KITS

LEG SIZE	U-BOLT PT. NO. (W/ NUTS)	KIT ASSY PT. NO.
1½" PIPE	JR83AW	JR83AW4
2" PIPE	JR83AW	JR83AW4
2½" PIPE	JR84AW	JR84AW4
3" PIPE	JR88AW	JR88AW4
3½" PIPE	JR89AW	JR89AW4
4" PIPE	JR85AW	JR85AW4
5" PIPE	JR86AW	JR86AW4
6" PIPE	JR87AW	JR87AW4
8" PIPE	JR90SAW	JR90SAW4

ADDITIONAL T.B. PLATE ASSY CHART

TUBE SIZE	TIE-BACK ATTACHMENT HOLE SIZES	PLATE ASSY PT. NO.	DRAWING NO.
3"	9/16", 11/16", 13/16"	AP34T3	A810119
3"	15/16"	AP34T6D2	A820103
4"	9/16", 11/16", 13/16"	AP34T4	A810119
4"	15/16"	AP34T6D1	A820103

NOTE: FLAT WASHERS ARE PROVIDED FOR ALL SLOTTED HOLES.

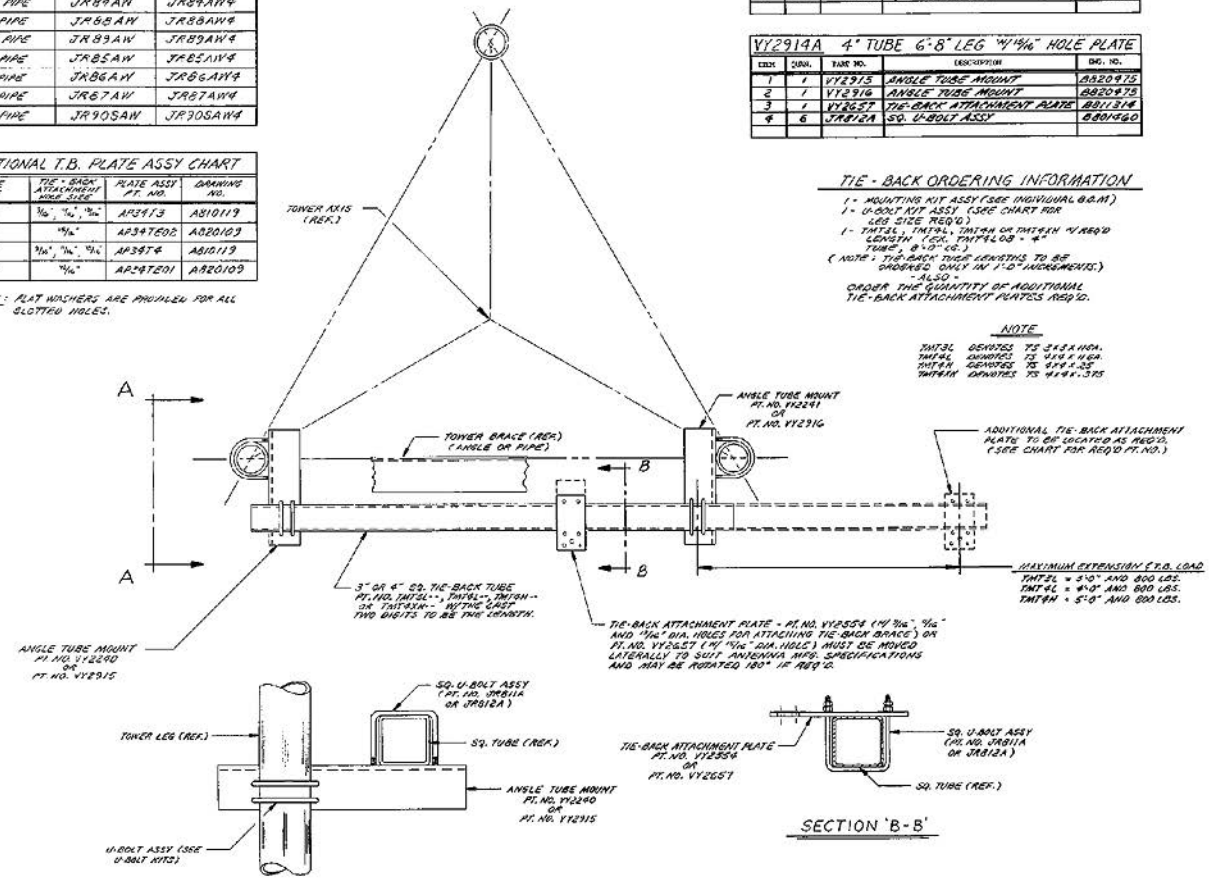

VY2913A 4" TUBE 1½"-5" LEG W/ 15/16" HOLE PLATE

ITEM	QUAN.	PART NO.	DESCRIPTION	DWG. NO.
1	1	VY2290	ANGLE TUBE MOUNT	8801450
2	1	VY2291	ANGLE TUBE MOUNT	8801450
3	1	VY2657	TIE-BACK ATTACHMENT PLATE	8811314
4	6	JR812A	SQ. U-BOLT ASSY	8801460

VY2914A 4" TUBE 6'-8" LEG W/ 15/16" HOLE PLATE

ITEM	QUAN.	PART NO.	DESCRIPTION	DWG. NO.
1	1	VY2915	ANGLE TUBE MOUNT	8820475
2	1	VY2916	ANGLE TUBE MOUNT	8820475
3	1	VY2657	TIE-BACK ATTACHMENT PLATE	8811314
4	6	JR812A	SQ. U-BOLT ASSY	8801460

TIE-BACK ORDERING INFORMATION

1 - MOUNTING KIT ASSY (SEE INDIVIDUAL B.O.M)
1 - U-BOLT KIT ASSY (SEE CHART FOR LEG SIZE REQ'D.)
1 - TMT3L, TMT4L, TMT4H OR TMT4XH W/ REQ'D LENGTH (EX. TMT4L08 = 4" TUBE, 8'-0" LG.)
(NOTE: TIE-BACK TUBE LENGTHS TO BE ORDERED ONLY IN 1'-0" INCREMENTS.)
- ALSO -
ORDER THE QUANTITY OF ADDITIONAL TIE-BACK ATTACHMENT PLATES REQ'D.

NOTE

TMT3L DENOTES TS 3x3x.188
TMT4L DENOTES TS 4x4x.188
TMT4H DENOTES TS 4x4x.25
TMT4XH DENOTES TS 4x4x.375

VY2907A 3" TUBE 1½"-5" LEG W/ UNIV. TB PLATE

ITEM	QUAN.	PART NO.	DESCRIPTION	DWG. NO.
1	1	VY2290	ANGLE TUBE MOUNT	8801450
2	1	VY2291	ANGLE TUBE MOUNT	8801450
3	1	VY2554	TIE-BACK ATTACHMENT PLATE	8810643
4	6	JR811A	SQ. U-BOLT ASSY	8801460

VY2908A 3" TUBE 6'-8" LEG W/ UNIV. TB PLATE

ITEM	QUAN.	PART NO.	DESCRIPTION	DWG. NO.
1	1	VY2915	ANGLE TUBE MOUNT	8820475
2	1	VY2916	ANGLE TUBE MOUNT	8820475
3	1	VY2554	TIE-BACK ATTACHMENT PLATE	8810643
4	6	JR811A	SQ. U-BOLT ASSY	8801460

VY2909A 3" TUBE 1½"-5" LEG W/ 15/16" HOLE TB PLATE

ITEM	QUAN.	PART NO.	DESCRIPTION	DWG. NO.
1	1	VY2290	ANGLE TUBE MOUNT	8801450
2	1	VY2291	ANGLE TUBE MOUNT	8801450
3	1	VY2657	TIE-BACK ATTACHMENT PLATE	8811314
4	6	JR811A	SQ. U-BOLT ASSY	8801460

VY2910A 3" TUBE 6'-8" LEG W/ 15/16" HOLE TB PLATE

ITEM	QUAN.	PART NO.	DESCRIPTION	DWG. NO.
1	1	VY2915	ANGLE TUBE MOUNT	8820475
2	1	VY2916	ANGLE TUBE MOUNT	8820475
3	1	VY2657	TIE-BACK ATTACHMENT PLATE	8811314
4	6	JR811A	SQ. U-BOLT ASSY	8801460

VY2911A 4" TUBE 1½"-5" LEG W/ UNIV. TB PLATE

ITEM	QUAN.	PART NO.	DESCRIPTION	DWG. NO.
1	1	VY2290	ANGLE TUBE MOUNT	8801450
2	1	VY2291	ANGLE TUBE MOUNT	8801450
3	1	VY2554	TIE-BACK ATTACHMENT PLATE	8810643
4	6	JR812A	SQ. U-BOLT ASSY	8801460

VY2912A 4" TUBE 6'-8" LEG W/ UNIV. TB PLATE

ITEM	QUAN.	PART NO.	DESCRIPTION	DWG. NO.
1	1	VY2915	ANGLE TUBE MOUNT	8820475
2	1	VY2916	ANGLE TUBE MOUNT	8820475
3	1	VY2554	TIE-BACK ATTACHMENT PLATE	8810643
4	6	JR812A	SQ. U-BOLT ASSY	8801460

NOTE: THESE TIE-BACK ASSY'S MAY BE MTD. ON THE INSIDE OF THE TOWER FACE IF REQ'D.

Unarco-Rohn
Division of Unarco Industries, Inc.

STD. EXTENDED TIE-BACK ASSY'S

Scale NONE			
Drawn By GRW	Date 06-11-82		
Checked By K.T.C.	Date 6-23-82		
Approved by Engineering TS	Date 6/25/82		
Approved by Production	Date		
Approved by Sales G.R.	Date 6-23-82		

Drawing Number D820142

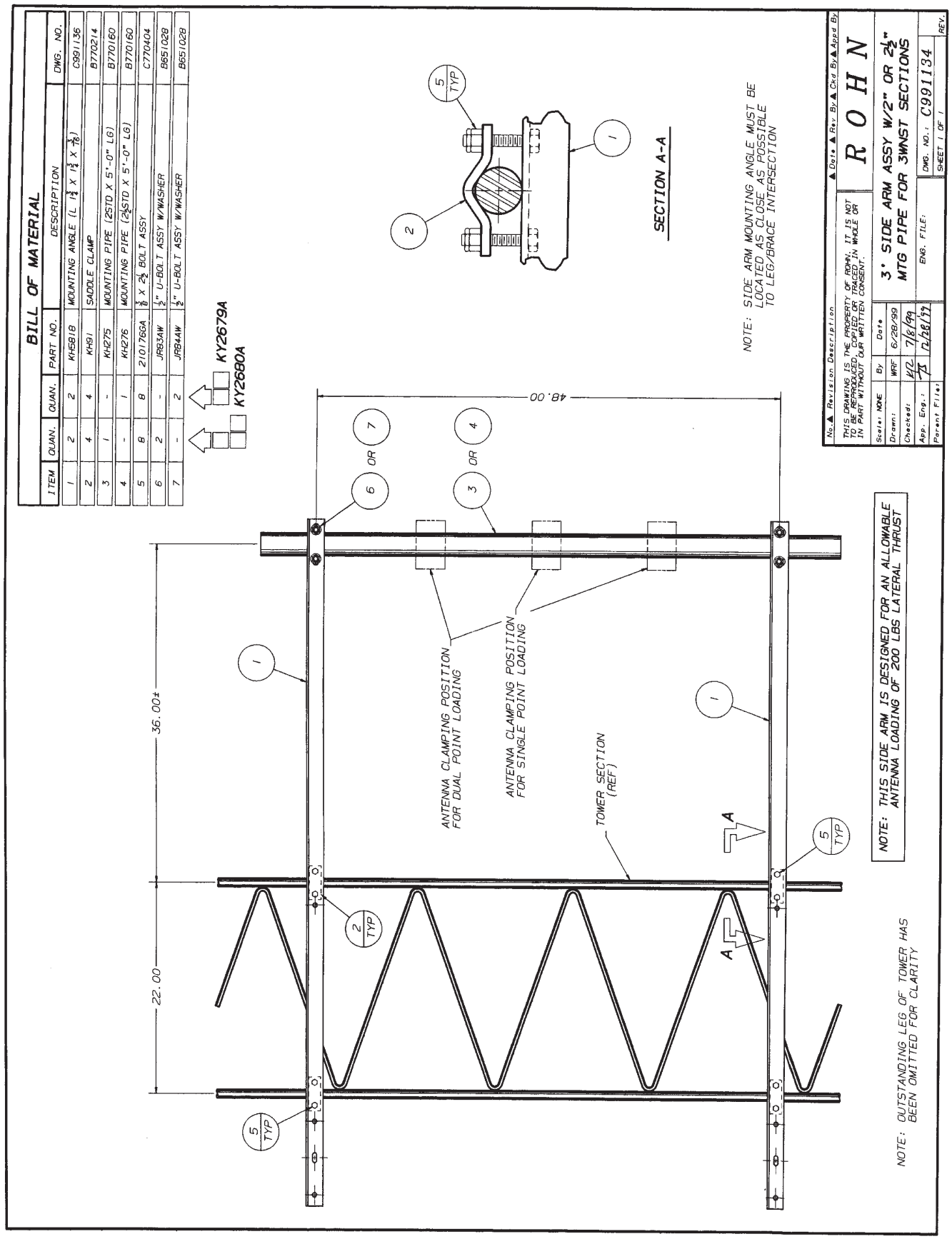
BILL OF MATERIAL
ITEM | QUAN. | QUAN. | PART NO. | DESCRIPTION | DWG. NO.
1 | 2 | 2 | KH5818 | MOUNTING ANGLE (L 1 3/4 X 1 3/4 X 3/16) | C991136
2 | 4 | 4 | KH91 | SADDLE CLAMP | B770214
3 | 1 | - | KH275 | MOUNTING PIPE (2STD X 5'-0" LG) | B770160
4 | - | 1 | KH276 | MOUNTING PIPE (2 1/2STD X 5'-0" LG) | B770160
5 | 8 | 8 | 210176GA | 3/8 X 2 1/2 BOLT ASSY | C770404
6 | 2 | - | JR83AW | 1/2" U-BOLT ASSY W/WASHER | B651028
7 | - | 2 | JR84AW | 1/2" U-BOLT ASSY W/WASHER | B651028
KY2679A
KY2680A
SECTION A-A
NOTE: SIDE ARM MOUNTING ANGLE MUST BE LOCATED AS CLOSE AS POSSIBLE TO LEG/BRACE INTERSECTION
48.00
36.00±
22.00
ANTENNA CLAMPING POSITION FOR DUAL POINT LOADING
ANTENNA CLAMPING POSITION FOR SINGLE POINT LOADING
TOWER SECTION (REF)
NOTE: THIS SIDE ARM IS DESIGNED FOR AN ALLOWABLE ANTENNA LOADING OF 200 LBS LATERAL THRUST
NOTE: OUTSTANDING LEG OF TOWER HAS BEEN OMITTED FOR CLARITY
No. ▲ Revision Description
▲ Date ▲ Rev. By ▲ Ckd By ▲ Appd By
THIS DRAWING IS THE PROPERTY OF ROHN. IT IS NOT TO BE REPRODUCED, COPIED OR TRACED IN WHOLE OR IN PART WITHOUT OUR WRITTEN CONSENT.
ROHN
Scale: NONE
By
Date
Drawn: WRF 6/28/99
Checked: 7/8/99
App. Eng.: 12/28/99
Parent File:
3° SIDE ARM ASSY W/2" OR 2 1/2" MTG PIPE FOR 3WNST SECTIONS
ENG. FILE:
DWG. NO.: C991134
SHEET 1 OF 1
REV.

BILL OF MATERIAL

ITEM	QUAN.	QUAN.	PART NO.	DESCRIPTION	DWG. NO.
1	2	2	KH5818	MOUNTING ANGLE (L $1\frac{3}{4}$ X $1\frac{3}{4}$ X $\frac{3}{16}$)	C991136
2	4	4	D114	SADDLE CLAMP	B770214
3	1	-	KH275	MOUNTING PIPE (2STD X 5'-0" LG)	B770160
4	-	1	KH276	MOUNTING PIPE ($2\frac{1}{2}$STD X 5'-0" LG)	B770160
5	8	8	210176GA	$\frac{3}{8}$ X $2\frac{1}{2}$ BOLT ASSY	C770404
6	2	-	JR83AW	$\frac{1}{2}$" U-BOLT ASSY W/WASHER	B651028
7	-	2	JR84AW	$\frac{1}{2}$" U-BOLT ASSY W/WASHER	B651028
8	2	2	250008G	WASHER FOR $\frac{3}{8}$" BOLT	N/A

KY2677A
KY2678A

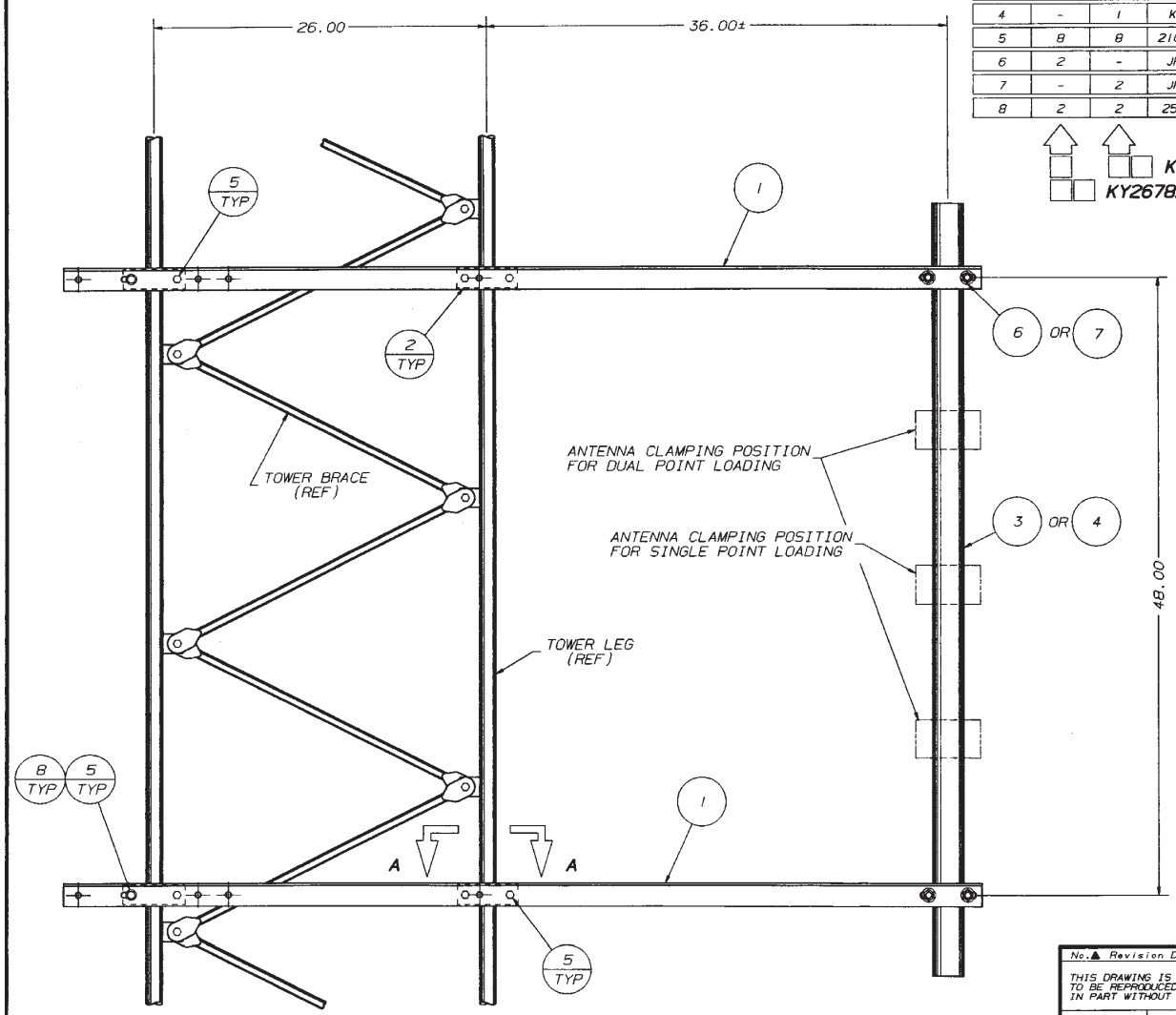

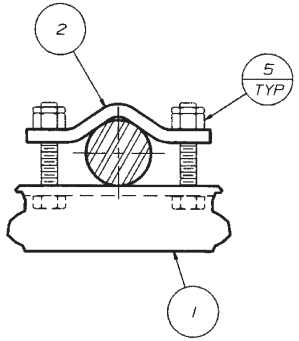

SECTION A-A

NOTE: SIDE ARM MOUNTING ANGLE MUST BE LOCATED AS CLOSE AS POSSIBLE TO LEG/BRACE INTERSECTION

NOTE: OUTSTANDING LEG OF TOWER HAS BEEN OMITTED FOR CLARITY

NOTE: THIS SIDE ARM IS DESIGNED FOR AN ALLOWABLE ANTENNA LOADING OF 200 LBS LATERAL THRUST

No. ▲ Revision Description ▲ Date ▲ Rev By ▲ Ckd By ▲ Appd By

ROHN

Scale: NONE	By	Date
Drawn:	WRF	6/28/99
Checked:	KR	7/8/99
App. Eng.:	JS	12/28/99
Parent File:		

3' SIDE ARM ASSY W/2" OR $2\frac{1}{2}$" MTG PIPE FOR 4NST SECTIONS

ENG. FILE:

DWG. NO.: C991133

SHEET 1 OF 1 REV.

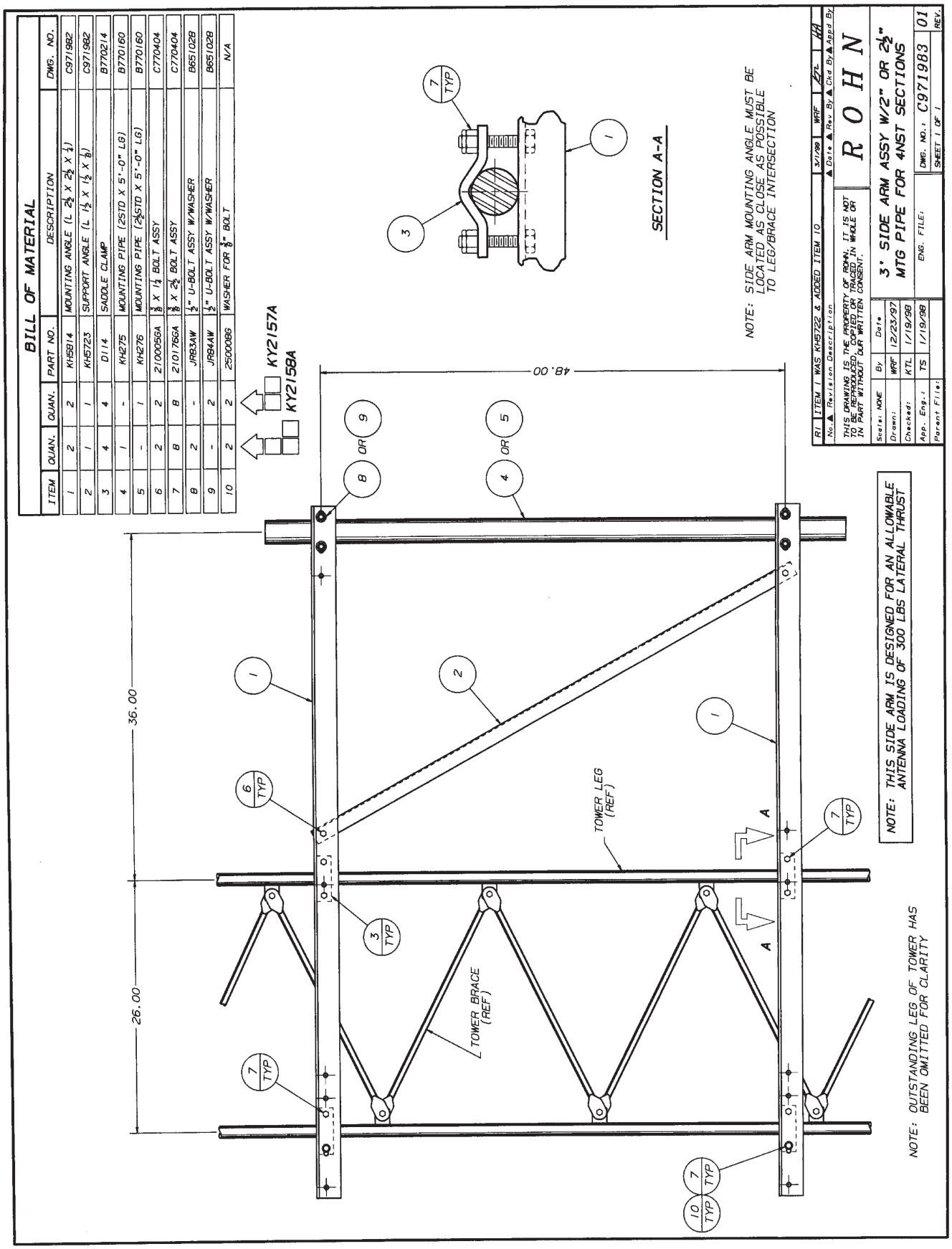
BILL OF MATERIAL
ITEM | QUAN. | QUAN. | PART NO. | DESCRIPTION | DWG. NO.
1 | 2 | 2 | KH5814 | MOUNTING ANGLE (L 2½ X 2½ X ¼) | C971982
2 | 1 | 1 | KH5723 | SUPPORT ANGLE (L 1½ X 1½ X ⅛) | C971982
3 | 4 | 4 | D114 | SADDLE CLAMP | B770214
4 | 1 | - | KH275 | MOUNTING PIPE (2STD X 5'-0" LG) | B770160
5 | - | 1 | KH276 | MOUNTING PIPE (2½STD X 5'-0" LG) | B770160
6 | 2 | 2 | 2100056A | ⅜ X 1¼ BOLT ASSY | C770404
7 | 8 | 8 | 210176GA | ⅜ X 2½ BOLT ASSY | C770404
8 | 2 | - | JR83AW | ½" U-BOLT ASSY W/WASHER | B651028
9 | - | 2 | JR84AW | ½" U-BOLT ASSY W/WASHER | B651028
10 | 2 | 2 | 2500088 | WASHER FOR ⅜" BOLT | N/A
KY2157A
KY2158A
48.00
36.00
26.00
TOWER LEG (REF)
TOWER BRACE (REF)
SECTION A-A
NOTE: SIDE ARM MOUNTING ANGLE MUST BE LOCATED AS CLOSE AS POSSIBLE TO LEG/BRACE INTERSECTION
NOTE: THIS SIDE ARM IS DESIGNED FOR AN ALLOWABLE ANTENNA LOADING OF 300 LBS LATERAL THRUST
NOTE: OUTSTANDING LEG OF TOWER HAS BEEN OMITTED FOR CLARITY
R1 ITEM 1 WAS KH5722 & ADDED ITEM 10 3/1/99 WRF
No. ▲ Revision Description ▲ Date ▲ Rev. By ▲ Chd By ▲ Appd By
THIS DRAWING IS THE PROPERTY OF ROHN. IT IS NOT TO BE REPRODUCED, COPIED OR TRACED IN WHOLE OR IN PART WITHOUT OUR WRITTEN CONSENT.
ROHN
Scale: NONE
Drawn: WRF 12/23/97
Checked: KTL 1/19/98
App. Eng.: TS 1/19/98
Parent File:
3' SIDE ARM ASSY W/2" OR 2½" MTG PIPE FOR 4NST SECTIONS
DWG. NO.: C971983
ENG. FILE:
SHEET 1 OF 1
REV. 01

BILL OF MATERIAL

ITEM	QUAN.	QUAN.	PART NO.	DESCRIPTION	DWG. NO.
1	2	2	KH5814	MOUNTING ANGLE (L $2\frac{1}{2}$ X $2\frac{1}{2}$ X $\frac{1}{4}$)	C971982
2	1	1	KH5723	SUPPORT ANGLE (L $1\frac{1}{2}$ X $1\frac{1}{2}$ X $\frac{1}{8}$)	C971982
3	4	4	D114	SADDLE CLAMP	B770214
4	1	-	KH275	MOUNTING PIPE (2STD X 5'-0" LG)	B770160
5	-	1	KH276	MOUNTING PIPE ($2\frac{1}{2}$STD X 5'-0" LG)	B770160
6	2	2	210005GA	$\frac{5}{8}$ X $1\frac{1}{4}$ BOLT ASSY	C770404
7	8	8	210176GA	$\frac{5}{8}$ X $2\frac{1}{2}$ BOLT ASSY	C770404
8	2	-	JRB3AW	$\frac{1}{2}$" U-BOLT ASSY W/WASHER	B651028
9	-	2	JRB4AW	$\frac{1}{2}$" U-BOLT ASSY W/WASHER	B651028
10	2	2	250008G	WASHER FOR $\frac{5}{8}$" BOLT	N/A

KY2157A
KY2158A

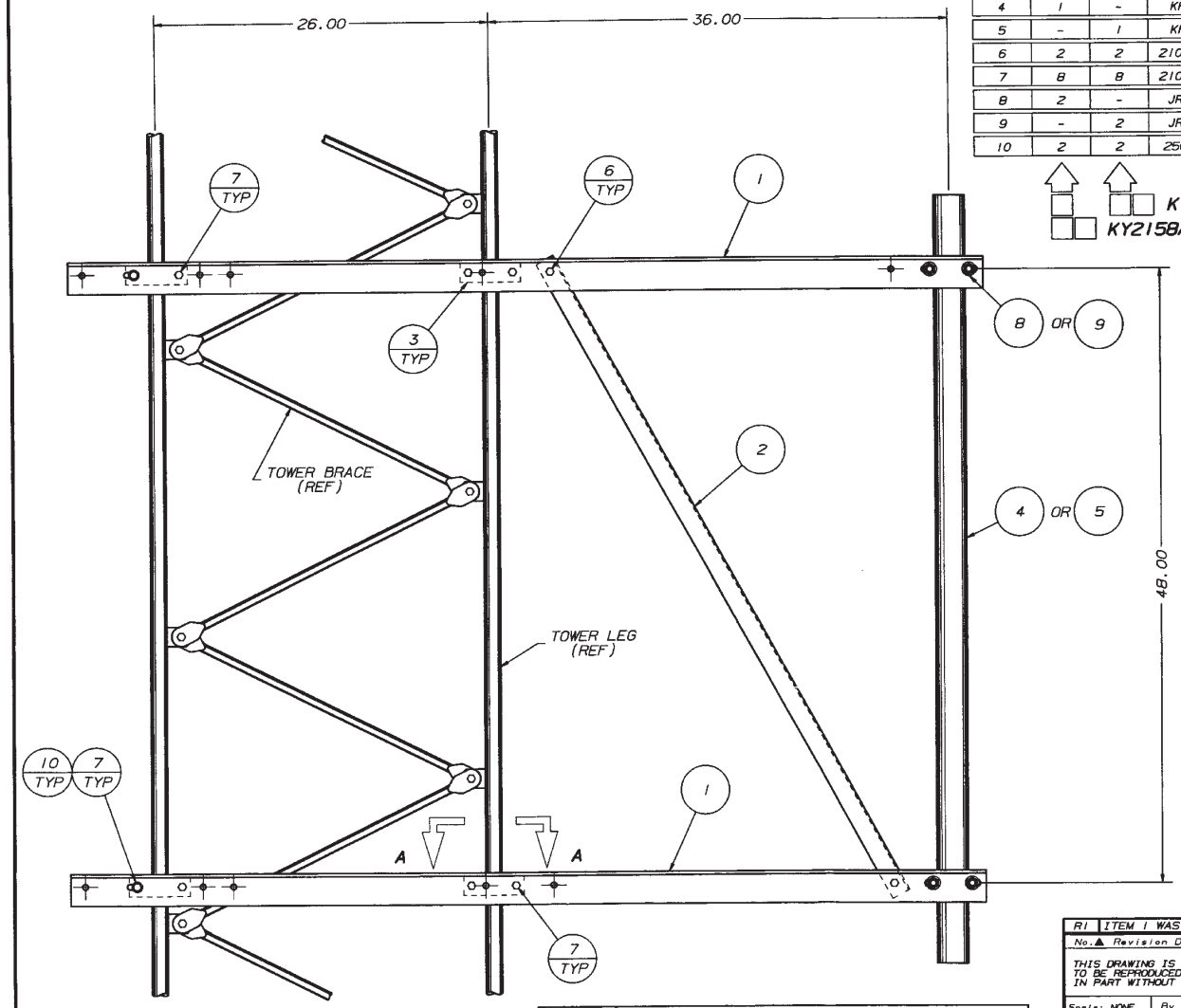

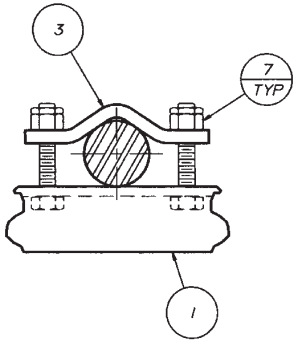

SECTION A-A

NOTE: SIDE ARM MOUNTING ANGLE MUST BE LOCATED AS CLOSE AS POSSIBLE TO LEG/BRACE INTERSECTION

NOTE: OUTSTANDING LEG OF TOWER HAS BEEN OMITTED FOR CLARITY

NOTE: THIS SIDE ARM IS DESIGNED FOR AN ALLOWABLE ANTENNA LOADING OF 300 LBS LATERAL THRUST

No.	Revision Description	Date	Rev By	Ckd By	Appd By
R1	ITEM 1 WAS KH5722 & ADDED ITEM 10	3/1/99	WRF		

ROHN

	By	Date
Scale: NONE		
Drawn:	WRF	12/23/97
Checked:	KTL	1/19/98
App. Eng.:	TS	1/19/98
Parent File:		

3' SIDE ARM ASSY W/2" OR $2\frac{1}{2}$" MTG PIPE FOR 4NST SECTIONS

ENG. FILE:

DWG. NO.: C971983 REV. 01

SHEET 1 OF 1

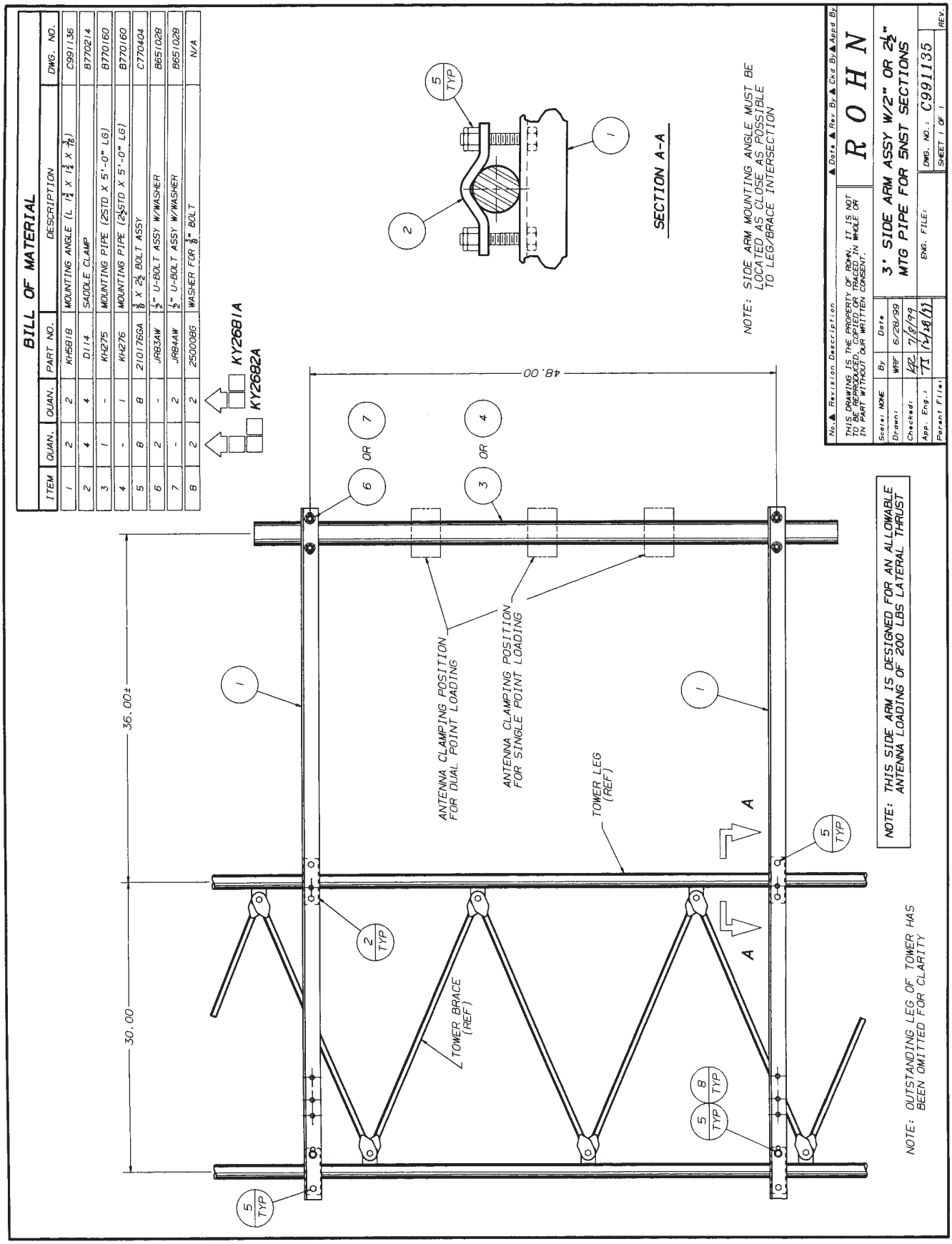
BILL OF MATERIAL
ITEM | QUAN. | QUAN. | PART NO. | DESCRIPTION | DWG. NO.
1 | 2 | 2 | KH5818 | MOUNTING ANGLE (L 1 3/4 X 1 3/4 X 7/16) | C991136
2 | 4 | 4 | D114 | SADDLE CLAMP | B770214
3 | 1 | - | KH275 | MOUNTING PIPE (2STD X 5'-0" LG) | B770160
4 | - | 1 | KH276 | MOUNTING PIPE (2 1/2STD X 5'-0" LG) | B770160
5 | 8 | 8 | 210176GA | 3/8 X 2 1/2 BOLT ASSY | C770404
6 | 2 | - | JR83AW | 1/2" U-BOLT ASSY W/WASHER | B651028
7 | - | 2 | JR84AW | 1/2" U-BOLT ASSY W/WASHER | B651028
8 | 2 | 2 | 2500086 | WASHER FOR 3/8" BOLT | N/A
KY2681A
KY2682A
48.00
36.00±
30.00
ANTENNA CLAMPING POSITION FOR DUAL POINT LOADING
ANTENNA CLAMPING POSITION FOR SINGLE POINT LOADING
TOWER LEG (REF)
TOWER BRACE (REF)
SECTION A-A
NOTE: SIDE ARM MOUNTING ANGLE MUST BE LOCATED AS CLOSE AS POSSIBLE TO LEG/BRACE INTERSECTION
NOTE: THIS SIDE ARM IS DESIGNED FOR AN ALLOWABLE ANTENNA LOADING OF 200 LBS LATERAL THRUST
NOTE: OUTSTANDING LEG OF TOWER HAS BEEN OMITTED FOR CLARITY
THIS DRAWING IS THE PROPERTY OF ROHN. IT IS NOT TO BE REPRODUCED, COPIED OR TRACED IN WHOLE OR IN PART WITHOUT OUR WRITTEN CONSENT.
ROHN
3' SIDE ARM ASSY W/2" OR 2 1/2" MTG PIPE FOR SNST SECTIONS
DWG. NO.: C991135
SHEET 1 OF 1
Scale: NONE
Drawn: WRF 6/28/99
Checked: 7/8/99
App. Eng.:
Parent File:
ENG. FILE:
REV.

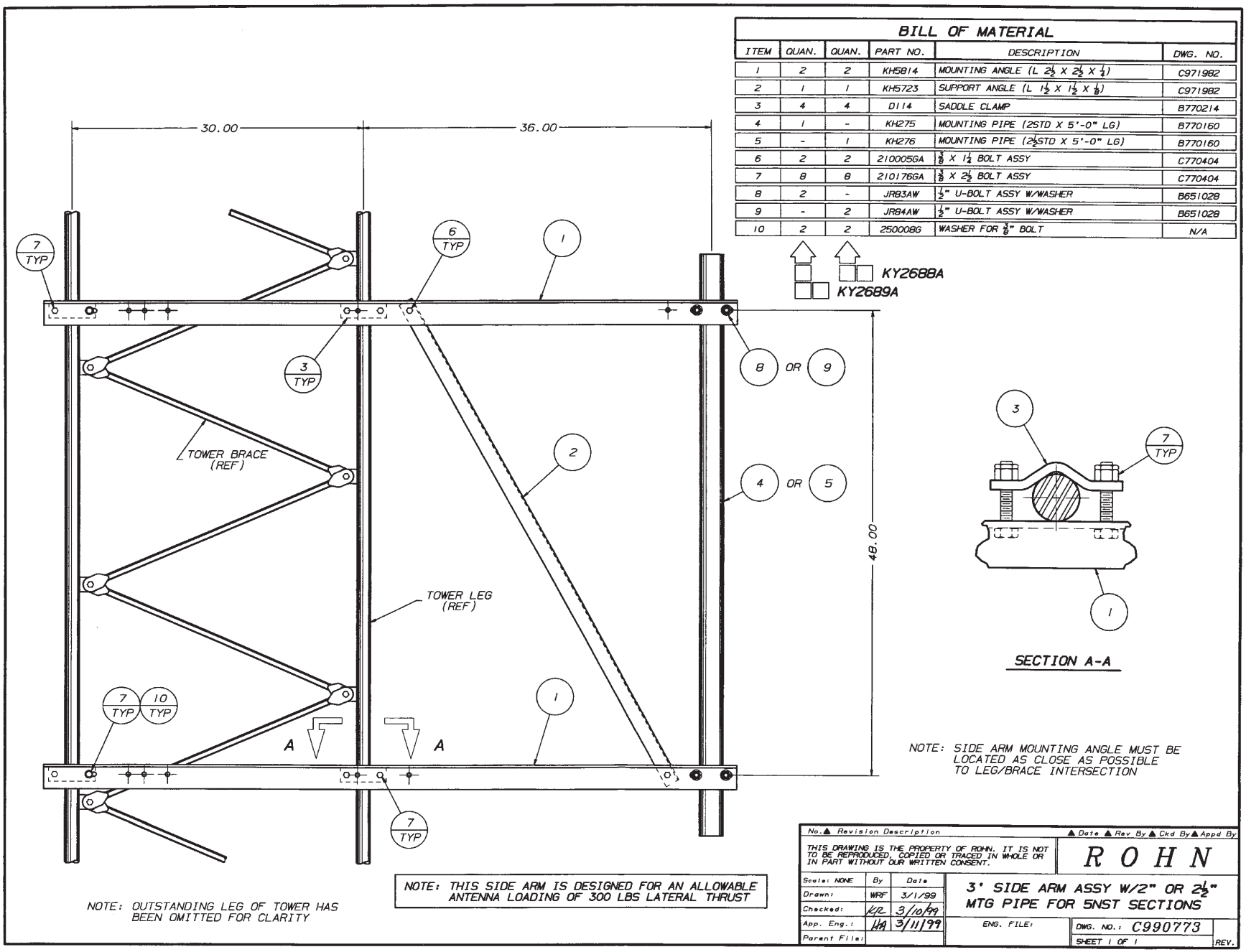

BILL OF MATERIAL					
ITEM	QUAN.	QUAN.	PART NO.	DESCRIPTION	DWG. NO.
1	2	2	KH5814	MOUNTING ANGLE (L 2½ X 2½ X ¼)	C971982
2	1	1	KH5723	SUPPORT ANGLE (L 1½ X 1½ X ⅛)	C971982
3	4	4	D114	SADDLE CLAMP	B770214
4	1	-	KH275	MOUNTING PIPE (2STD X 5'-0" LG)	B770160
5	-	1	KH276	MOUNTING PIPE (2½STD X 5'-0" LG)	B770160
6	2	2	210005GA	⅜ X 1¼ BOLT ASSY	C770404
7	8	8	210176GA	⅜ X 2½ BOLT ASSY	C770404
8	2	-	JR83AW	½" U-BOLT ASSY W/WASHER	B651028
9	-	2	JR84AW	½" U-BOLT ASSY W/WASHER	B651028
10	2	2	250008G	WASHER FOR ⅜" BOLT	N/A

WAVEGUIDE SUPPORT

Waveguide Ladder Assembly

ROHN Waveguide Ladder assemblies come in 10 ft. or 20 ft. sections with pre-punched rungs in two variations, 8 or 15 holes, with both 7/16" diameter holes to accommodate butterfly hangers and 3/4" diameter holes to accept snap-in hangers. These ladders can be ordered with either 3 ft. or 4 ft. rung spacing. The 8 hole ladder is 19-1/6" wide and the 15 hole ladder is 34-13/16" wide. Mounting clamp assemblies must be ordered separately based upon brace size to which it is to be attached. All items are hot dip galvanized.

Special instructions on ordering Waveguide Ladders and Clamps

Waveguide ladder mounting clamp assemblies are included as part of the Waveguide Ladder but must be specified/ordered separately based upon brace size. See lower table on this page for part numbers and descriptions. Note there are tables for round and angle braces.

Part Number	Description
WL20F154KD	Waveguide Ladder, 20 foot section, 15 hole rungs with 4 foot spacing
WL10F154KD	Waveguide Ladder, 10 foot section, 15 hole rungs with 4 foot spacing
WL20F84KD	Waveguide Ladder, 20 foot section, 8 hole rungs with 4 foot spacing
WL10F84KD	Waveguide Ladder, 10 foot section, 8 hole rungs with 4 foot spacing
WL20F153KD	Waveguide Ladder, 20 foot section, 15 hole rungs with 3 foot spacing
WL10F153KD	Waveguide Ladder, 10 foot section, 15 hole rungs with 3 foot spacing
WL20F83KD	Waveguide Ladder, 20 foot section, 8 hole rungs with 3 foot spacing
WL10F83KD	Waveguide Ladder, 10 foot section, 8 hole rungs with 3 foot spacing

Waveguide ladder mounting clamp assemblies for SSMW Towers

Assembly	For brace size	Assembly includes			
	(OD of round braces)	Clamp	Qty	J bolt	Qty
WY3080A	1-1/2 to 2-3/8 inch	WY23	2	J44AA	4
WY3081A	2-7/8 to 3-1/2 inch	WY23	2	J51A	4
WY3082A	4 to 4-1/2 inch	WY24	2	J51A	4
WY3083A	5-9/16 inch	WY25	2	J51A	4
WY4559A	6-5/8 inch	WY4558	2	J51A	4

Waveguide ladder mounting clamp assemblies for SSV Towers

Assembly	For brace size	Assembly includes			
	(Angle braces)	Clamp	Qty	J bolt	Qty
KY693	1-1/2 inch	H173	2	J44AA	2
KY695	1-3/4 to 2-1/2 inch	H173	2	J51A	2
KY697	3 inch	H174	2	J51A	2
KY1287A	3-1/2 to 4 inch	H174	2	J170A	2

Detail

Detail

W/G LADDER MOUNTING CLAMP ASSEMBLIES

CLAMP ASSEMBLY P/N	TOWER BRACE SIZE (O.D.)	LADDER CLAMP			J-BOLT		
		P/N	DWG. NO.	QUAN	P/N	DWG. NO.	QUAN
WY3080A	1-1/2"-2-3/8"	WY23	SK730352B	2	J44AA	B2942A	4
WY3081A	2-7/8"-3-1/2"	WY23	SK730352B	2	J51A	B2947	4
WY3082A	4"-4-1/2"	WY24	SK730352B	2	J51A	B2947	4
WY3083A	5-9/16"	WY25	SK730356B	2	J51A	B2947	4
WY4559A	6-5/8"	WY4558	B831316	2	J51A	B2947	4

20' W/G LADDER SECTION BILL OF MATERIAL (WL20F93KD2)

ITEM	QTY	PART NO.	DESCRIPTION	DWG NO.
1	2	WY3425	20' W/G LADDER RAIL	C840372
2	7	WY8570	LADDER RUNG (9 HOLE)	C991003
3	2	WY3498	SPLICE PLATE	B820868
4	4	250008G	3/8" WASHER	C770404
5	18	210005GA	3/8x1-1/4 BOLT ASSEMBLY	C770404
6	REF	SEE CHART	MOUNTING CLAMP ASSY	SEE CHART

10' W/G LADDER SECTION BILL OF MATERIAL (WL10F93KD2)

ITEM	QTY	PART NO.	DESCRIPTION	DWG NO.
1	2	WY3426	10' W/G LADDER RAIL	C840372
2	4	WY8570	LADDER RUNG (9 HOLE)	C991003
3	2	WY3498	SPLICE PLATE	B820868
4	4	250008G	3/8" WASHER	C770404
5	12	210005GA	3/8x1-1/4 BOLT ASSEMBLY	C770404
6	REF	SEE CHART	MOUNTING CLAMP ASSY	SEE CHART

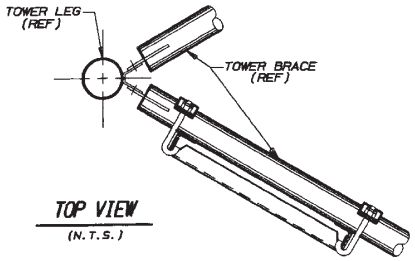

TOP VIEW
(N.T.S.)

CLAMP ASSEMBLY ORDERING INFO

ORDER 1 CLAMP ASSEMBLY (SEE BRACE SIZE) FOR EACH HORIZONTAL BRACE THAT THE W/G LADDER CROSSES.

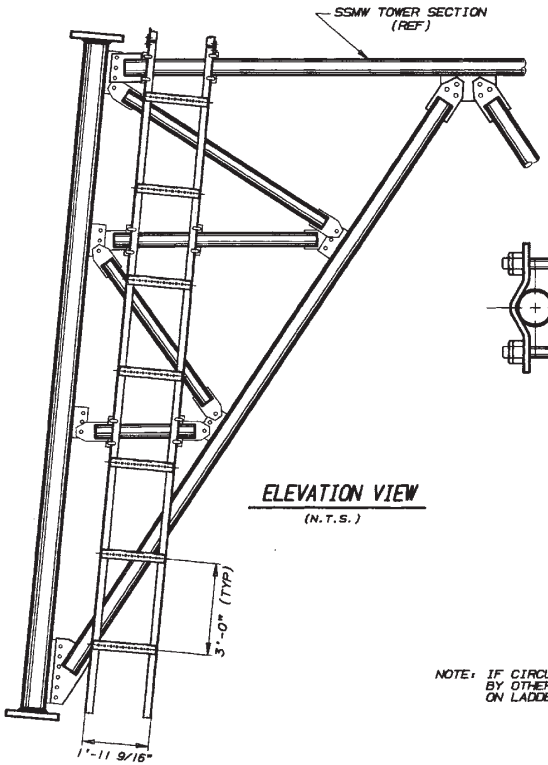

ELEVATION VIEW
(N.T.S.)

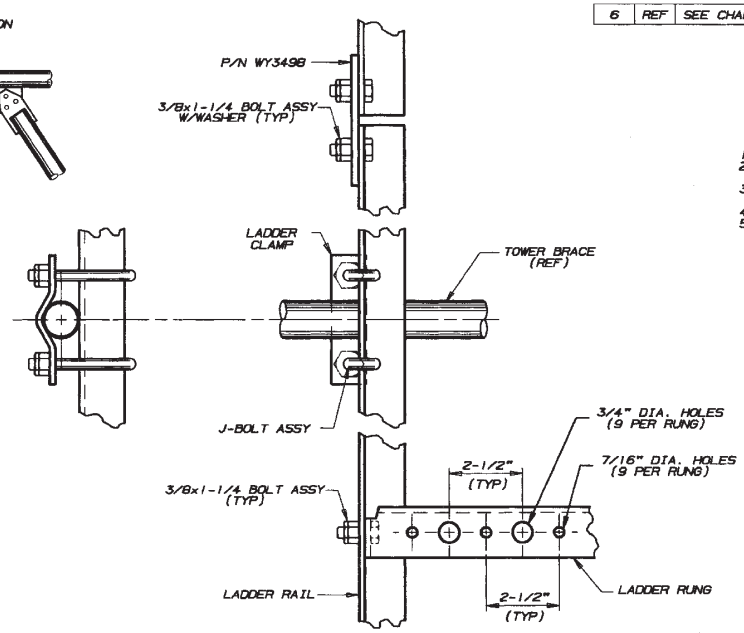

GENERAL NOTES

1. SPACE LADDER CLAMPS AS SHOWN.
2. THE W/G LADDER MAY REQUIRE FIELD CUTTING TO THE PROPER LENGTH AFTER ASSEMBLY
3. W/G LADDER MAY BE MOVED HORIZONTALLY FOR PROPER ALIGNMENT.
4. WASHERS ARE PROVIDED FOR ALL SLOTTED HOLES.
5. W/G LADDER MAY BE MOUNTED INSIDE OR OUTSIDE OF TOWER AS REQUIRED.

NOTE: IF CIRCULAR W/G IS USED, THREADED ADAPTERS, PROVIDED BY OTHERS, MAY BE REQUIRED TO PERFECTLY ALIGN W/G'S ON LADDER.

No.	Revision Description	Date	Rev By	Ckd By	Appd By
R1	REVISED PART NUMBER	7-28-99	JDM		

ROHN

Scale: NONE	By	Date
Drawn:	SRH	05/10/99
Checked:	JDM	5-12-99
App. Eng.:	TS	6-15-99
Parent File:		

LADDER ASSY W/G FACE MTD FOR SSMW TOWERS 9 HOLE 3' KD 2.50" O.C. 3/4" & 7/16" DIA.

ENG. FILE:

DWG. NO.: C991021 REV. 1

SHEET 1 OF 1

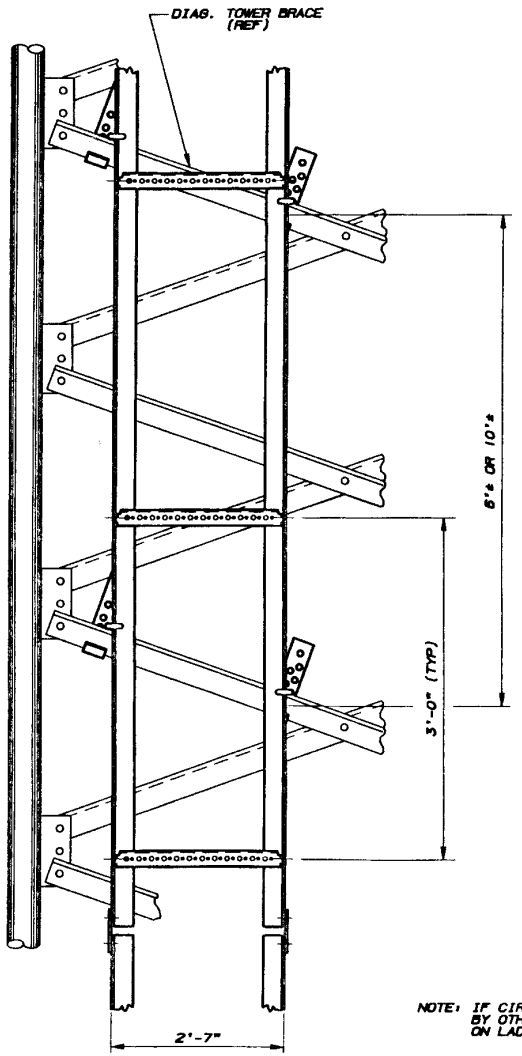

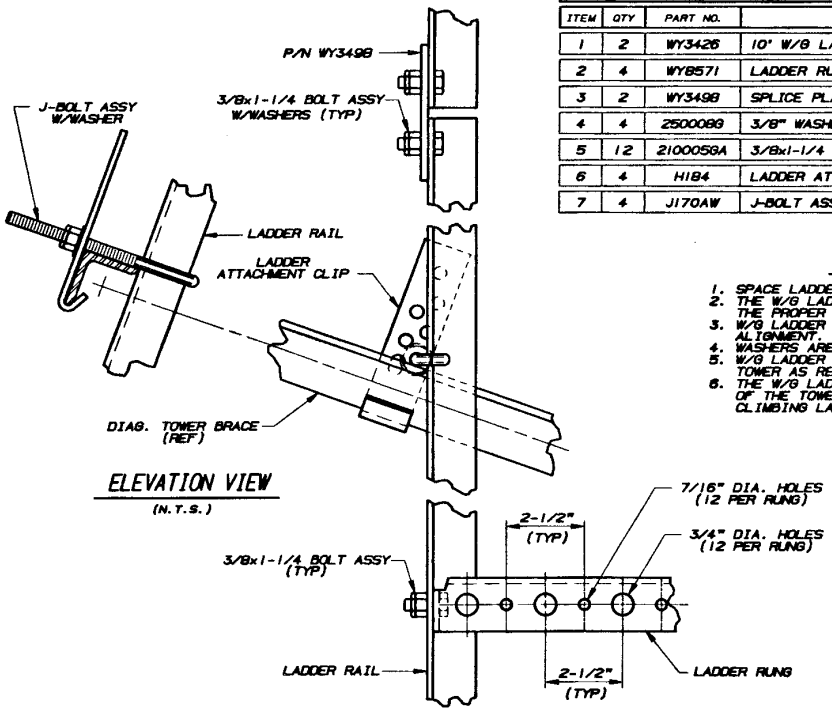

ELEVATION VIEW
(N.T.S.)

NOTE: IF CIRCULAR W/G IS USED, THREADED ADAPTERS, PROVIDED BY OTHERS, MAY BE REQUIRED TO PERFECTLY ALIGN W/G'S ON LADDER.

20' W/G LADDER SECTION BILL OF MATERIAL (WL20F123KD)

ITEM	QTY	PART NO.	DESCRIPTION	DWG NO.
1	2	WY3425	20' W/G LADDER RAIL	C840372
2	7	WY8571	LADDER RUNG (12 HOLE)	C991005
3	2	WY3498	SPLICE PLATE	B820868
4	4	2500088	3/8" WASHER	C770404
5	18	2100056A	3/8x1-1/4 BOLT ASSEMBLY	C770404
6	6	H184	LADDER ATTACHMENT CLIP	B991808
7	6	J170AW	J-BOLT ASSY W/WASHER	A991694

10' W/G LADDER SECTION BILL OF MATERIAL (WL10F123KD)

ITEM	QTY	PART NO.	DESCRIPTION	DWG NO.
1	2	WY3426	10' W/G LADDER RAIL	C840372
2	4	WY8571	LADDER RUNG (12 HOLE)	C991005
3	2	WY3498	SPLICE PLATE	B820868
4	4	2500088	3/8" WASHER	C770404
5	12	2100056A	3/8x1-1/4 BOLT ASSEMBLY	C770404
6	4	H184	LADDER ATTACHMENT CLIP	B991808
7	4	J170AW	J-BOLT ASSY W/WASHER	A991694

GENERAL NOTES

1. SPACE LADDER CLIPS AS SHOWN.
2. THE W/G LADDER MAY REQUIRE FIELD CUTTING TO THE PROPER LENGTH AFTER ASSEMBLY
3. W/G LADDER MAY BE MOVED HORIZONTALLY FOR PROPER ALIGNMENT.
4. WASHERS ARE PROVIDED FOR ALL SLOTTED HOLES.
5. W/G LADDER MAY BE MOUNTED INSIDE OR OUTSIDE OF TOWER AS REQUIRED.
6. THE W/G LADDER MUST BE OFFSET FROM THE CENTER OF THE TOWER WHEN USED WITH A FACE MOUNTED CLIMBING LADDER FOR REQUIRED CLEARANCES.

No.	Revision Description	Date	Rev By	Ckd By	Appd By
R1	CHGD GEOMETRY OF H184	6/23/00	JLM	[illegible]	TS

ROHN

Scale: NONE	By	Date
Drawn:	SRH	05/10/99
Checked:	JDM	6/16/99
App. Eng.:	TS	6/16/99
Parent File:		

LADDER ASSY W/G FACE MTD FOR SSV TOWERS 12 HOLE 3' KD 2.50" O.C. 3/4" & 7/16" DIA.

ENG. FILE:

DWG. NO.: C991007 REV. 01

SHEET 1 OF 1

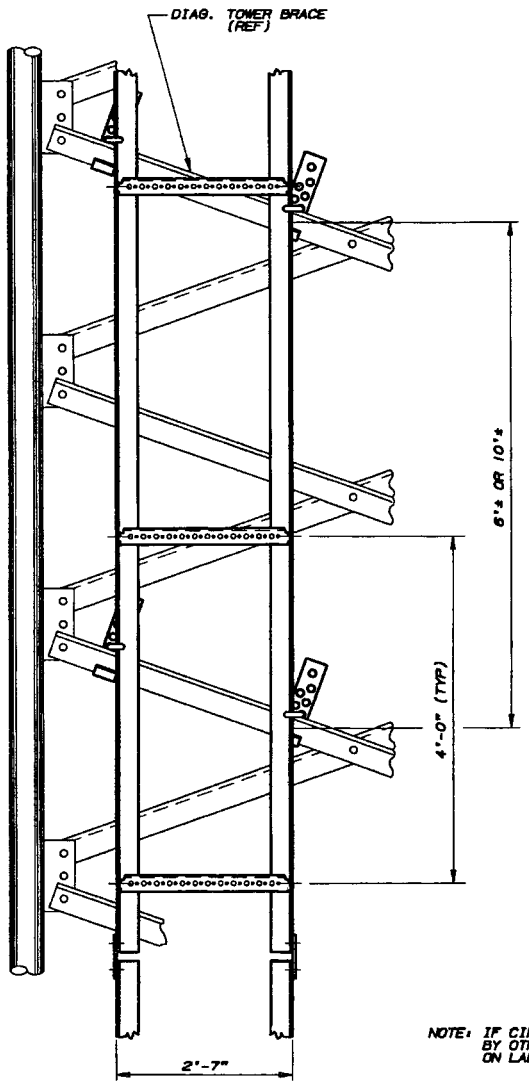

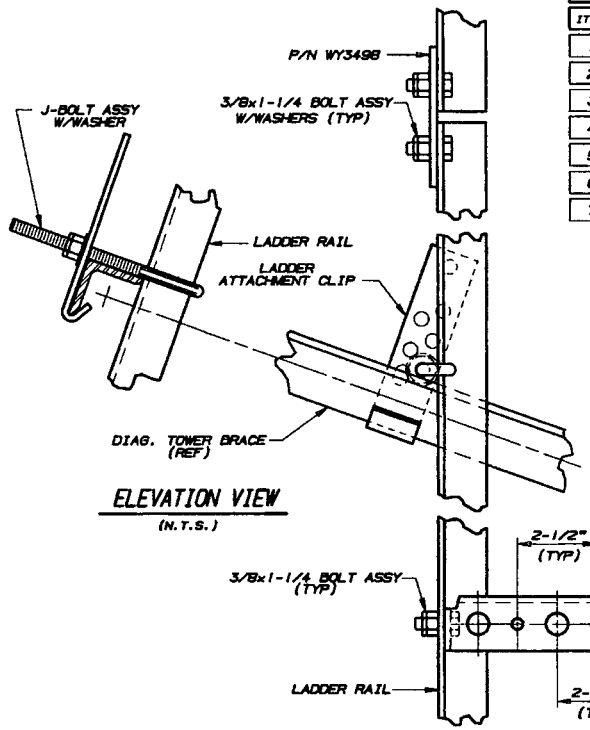

ELEVATION VIEW
(N.T.S.)

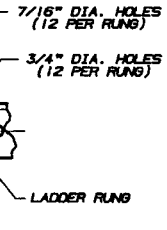

NOTE: IF CIRCULAR W/G IS USED, THREADED ADAPTERS, PROVIDED BY OTHERS, MAY BE REQUIRED TO PERFECTLY ALIGN W/G'S ON LADDER.

20' W/G LADDER SECTION BILL OF MATERIAL (WL20F124KD)

ITEM	QTY	PART NO.	DESCRIPTION	DWG NO.
1	2	WY3425	20' W/G LADDER RAIL	C840372
2	5	WY8571	LADDER RUNG (12 HOLE)	C991005
3	2	WY3498	SPLICE PLATE	B820868
4	4	250008G	3/8" WASHER	C770404
5	14	210005GA	3/8x1-1/4 BOLT ASSEMBLY	C770404
6	6	H184	LADDER ATTACHMENT CLIP	B991808
7	6	J170AW	J-BOLT ASSY W/WASHER	A991694

10' W/G LADDER SECTION BILL OF MATERIAL (WL10F124KD)

ITEM	QTY	PART NO.	DESCRIPTION	DWG NO.
1	2	WY3426	10' W/G LADDER RAIL	C840372
2	3	WY8571	LADDER RUNG (12 HOLE)	C991005
3	2	WY3498	SPLICE PLATE	B820868
4	4	250008G	3/8" WASHER	C770404
5	10	210005GA	3/8x1-1/4 BOLT ASSEMBLY	C770404
6	4	H184	LADDER ATTACHMENT CLIP	B991808
7	4	J170AW	J-BOLT ASSY W/WASHER	A991694

GENERAL NOTES

1. SPACE LADDER CLIPS AS SHOWN.
2. THE W/G LADDER MAY REQUIRE FIELD CUTTING TO THE PROPER LENGTH AFTER ASSEMBLY
3. W/G LADDER MAY BE MOVED HORIZONTALLY FOR PROPER ALIGNMENT.
4. WASHERS ARE PROVIDED FOR ALL SLOTTED HOLES.
5. W/G LADDER MAY BE MOUNTED INSIDE OR OUTSIDE OF TOWER AS REQUIRED.
6. THE W/G LADDER MUST BE OFFSET FROM THE CENTER OF THE TOWER WHEN USED WITH A FACE MOUNTED CLIMBING LADDER FOR REQUIRED CLEARANCES.
7. ▲▲ THIS ASSEMBLY IS NOT TO BE USED FOR ANGLES USING MATERIAL THICKER THAN 3/8".

No.▲	Revision Description	▲ Date	▲ Rev By	▲ Ckd By	▲ Appd By
R1	ADDED NOTE #7 AND REVISED PICTORIALLY	01/27/00	SRH		

ROHN

Scale: NONE	By	Date
Drawn:	SRH	05/10/99
Checked:	JDM	06/16/99
App. Eng.:	TS	06/16/99
Parent File:		

LADDER ASSY W/G FACE MTD FOR SSV TOWERS 12 HOLE 4' KD 2.50" O.C. 3/4" & 7/16" DIA.

ENG. FILE:

DWG. NO.: C991008 REV. 1

SHEET 1 OF 1

W/G LADDER MOUNTING CLAMP ASSEMBLIES

CLAMP ASSEMBLY P/N	TOWER BRACE SIZE (O.D.)	LADDER CLAMP			J-BOLT		
		P/N	DWG. NO.	QUAN	P/N	DWG. NO.	QUAN
WY3080A	1-1/2"-2-3/8"	WY23	SK730352B	2	J44AA	B2942A	4
WY3081A	2-7/8"-3-1/2"	WY23	SK730352B	2	J51A	B2947	4
WY3082A	4"-4-1/2"	WY24	SK730352B	2	J51A	B2947	4
WY3083A	5-9/16"	WY25	SK730356B	2	J51A	B2947	4
WY4559A	6-5/8"	WY4558	B831316	2	J51A	B2947	4

20' W/G LADDER SECTION BILL OF MATERIAL (WL20F123KD1)

ITEM	QTY	PART NO.	DESCRIPTION	DWG NO.
1	2	WY3425	20' W/G LADDER RAIL	C840372
2	7	WY8571	LADDER RUNG (12 HOLE)	C991005
3	2	WY3498	SPLICE PLATE	B820868
4	4	250008G	3/8" WASHER	C770404
5	18	210005GA	3/8x1-1/4 BOLT ASSEMBLY	C770404
6	REF	SEE CHART	MOUNTING CLAMP ASSY	SEE CHART

10' W/G LADDER SECTION BILL OF MATERIAL (WL10F123KD1)

ITEM	QTY	PART NO.	DESCRIPTION	DWG NO.
1	2	WY3426	10' W/G LADDER RAIL	C840372
2	4	WY8571	LADDER RUNG (12 HOLE)	C991005
3	2	WY3498	SPLICE PLATE	B820868
4	4	250008G	3/8" WASHER	C770404
5	12	210005GA	3/8x1-1/4 BOLT ASSEMBLY	C770404
6	REF	SEE CHART	MOUNTING CLAMP ASSY	SEE CHART

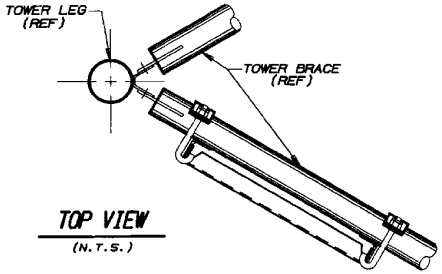

TOP VIEW
(N.T.S.)

CLAMP ASSEMBLY ORDERING INFO

ORDER 1 CLAMP ASSEMBLY (SEE BRACE SIZE) FOR EACH HORIZONTAL BRACE THAT THE W/G LADDER CROSSES.

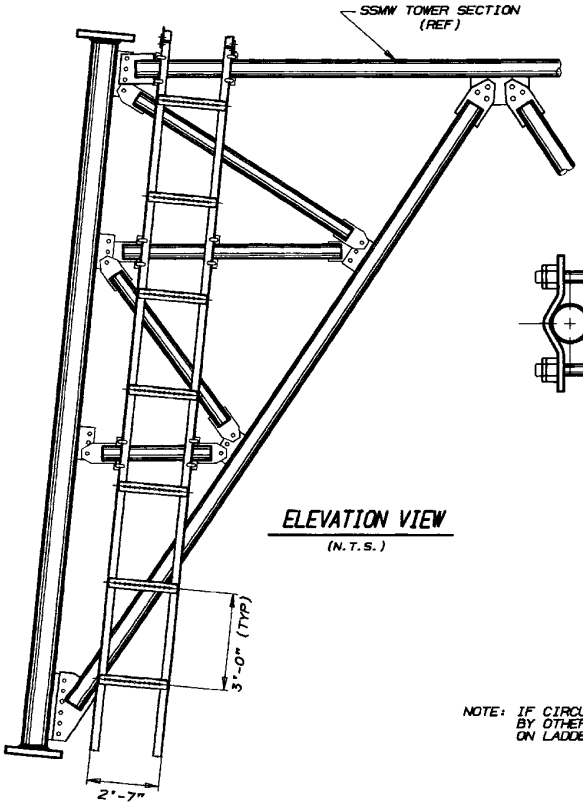

ELEVATION VIEW
(N.T.S.)

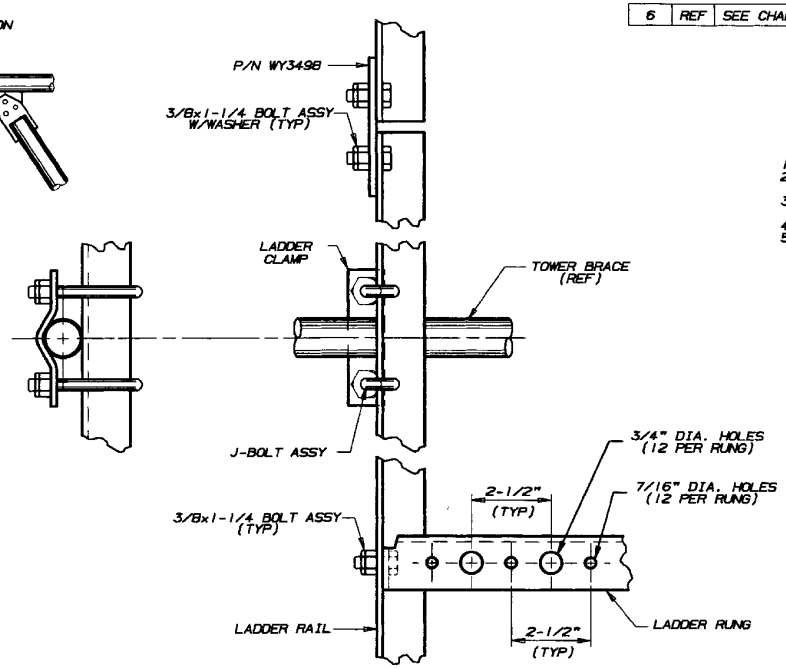

GENERAL NOTES

1. SPACE LADDER CLAMPS AS SHOWN.
2. THE W/G LADDER MAY REQUIRE FIELD CUTTING TO THE PROPER LENGTH AFTER ASSEMBLY
3. W/G LADDER MAY BE MOVED HORIZONTALLY FOR PROPER ALIGNMENT.
4. WASHERS ARE PROVIDED FOR ALL SLOTTED HOLES.
5. W/G LADDER MAY BE MOUNTED INSIDE OR OUTSIDE OF TOWER AS REQUIRED.

NOTE: IF CIRCULAR W/G IS USED, THREADED ADAPTERS, PROVIDED BY OTHERS, MAY BE REQUIRED TO PERFECTLY ALIGN W/G'S ON LADDER.

No.	Revision Description	Date	Rev By	Ckd By	Appd By
R1	REVISED PART NUMBER	7-28-99	JDM		TS

ROHN

Scale: NONE	By	Date
Drawn:	SRH	05/10/99
Checked:	JDM	5-17-99
App. Eng.:	TS	6-15-99
Parent File:		

LADDER ASSY W/G FACE MTD FOR SSMW TOWERS 12 HOLE 3' KD 2.50" O.C. 3/4" & 7/16" DIA.

ENG. FILE:

DWG. NO.: C991019 REV. 1

SHEET 1 OF 1

W/G LADDER MOUNTING CLAMP ASSEMBLIES

CLAMP ASSEMBLY P/N	TOWER BRACE SIZE (O.D.)	LADDER CLAMP			J-BOLT		
		P/N	DWG. NO.	QUAN	P/N	DWG. NO.	QUAN
WY3080A	1-1/2"-2-3/8"	WY23	SK730352B	2	J44AA	B2942A	4
WY3081A	2-7/8"-3-1/2"	WY23	SK730352B	2	J51A	B2947	4
WY3082A	4"-4-1/2"	WY24	SK730352B	2	J51A	B2947	4
WY3083A	5-9/16"	WY25	SK730356B	2	J51A	B2947	4
WY4559A	6-5/8"	WY4558	B831316	2	J51A	B2947	4

20' W/G LADDER SECTION BILL OF MATERIAL (WL20F124KD1)

ITEM	QTY	PART NO.	DESCRIPTION	DWG NO.
1	2	WY3425	20' W/G LADDER RAIL	C840372
2	5	WY8571	LADDER RUNG (12 HOLE)	C991005
3	2	WY3498	SPLICE PLATE	B820868
4	4	250008G	3/8" WASHER	C770404
5	14	210005GA	3/8x1-1/4 BOLT ASSEMBLY	C770404
6	REF	SEE CHART	MOUNTING CLAMP ASSY	SEE CHART

10' W/G LADDER SECTION BILL OF MATERIAL (WL10F124KD1)

ITEM	QTY	PART NO.	DESCRIPTION	DWG NO.
1	2	WY3426	10' W/G LADDER RAIL	C840372
2	3	WY8571	LADDER RUNG (12 HOLE)	C991005
3	2	WY3498	SPLICE PLATE	B820868
4	4	250008G	3/8" WASHER	C770404
5	10	210005GA	3/8x1-1/4 BOLT ASSEMBLY	C770404
6	REF	SEE CHART	MOUNTING CLAMP ASSY	SEE CHART

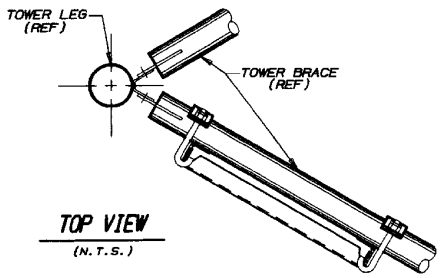

TOP VIEW
(N.T.S.)

CLAMP ASSEMBLY ORDERING INFO

ORDER 1 CLAMP ASSEMBLY (SEE BRACE SIZE) FOR EACH HORIZONTAL BRACE THAT THE W/G LADDER CROSSES.

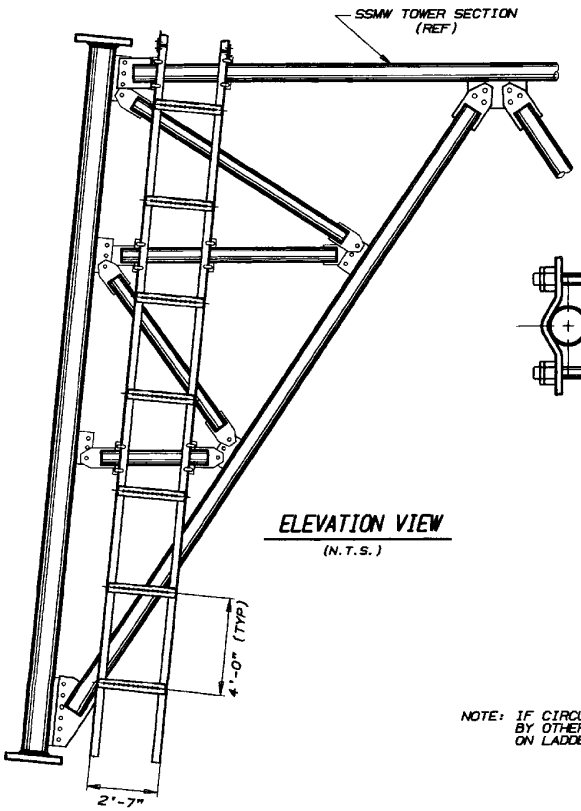

ELEVATION VIEW
(N.T.S.)

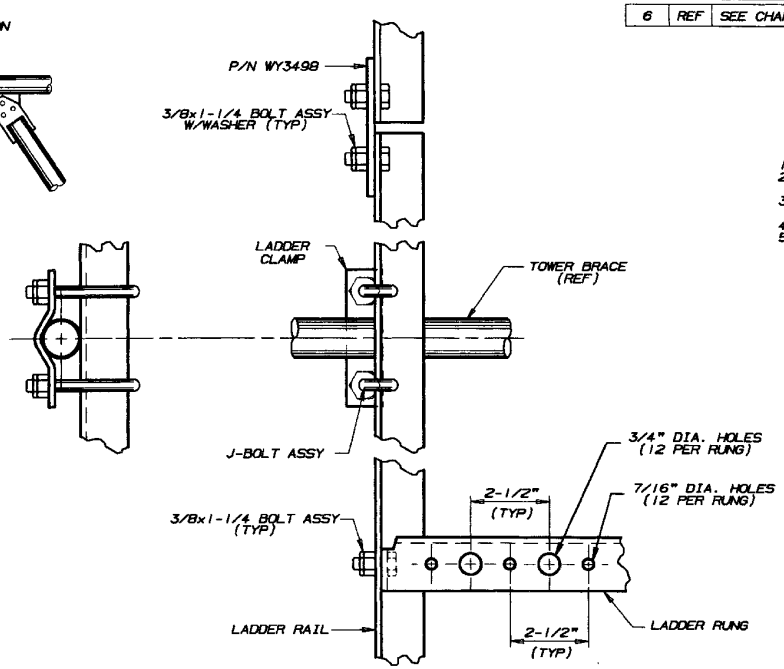

GENERAL NOTES

1. SPACE LADDER CLAMPS AS SHOWN.
2. THE W/G LADDER MAY REQUIRE FIELD CUTTING TO THE PROPER LENGTH AFTER ASSEMBLY
3. W/G LADDER MAY BE MOVED HORIZONTALLY FOR PROPER ALIGNMENT.
4. WASHERS ARE PROVIDED FOR ALL SLOTTED HOLES.
5. W/G LADDER MAY BE MOUNTED INSIDE OR OUTSIDE OF TOWER AS REQUIRED.

NOTE: IF CIRCULAR W/G IS USED, THREADED ADAPTERS, PROVIDED BY OTHERS, MAY BE REQUIRED TO PERFECTLY ALIGN W/G'S ON LADDER.

No.	Revision Description	Date	Rev By	Ckd By	Appd By
R1	REVISED PART NUMBER	7-28-99	JDM	RJL	TS

ROHN

Scale: NONE	By	Date
Drawn:	SRH	05/11/99
Checked:	JDM	5-12-99
App. Eng.:	TS	6-15-99
Parent File:		

LADDER ASSY W/G FACE MTD FOR SSMW TOWERS 12 HOLE 4' KD 2.50" O.C. 3/4" & 7/16" DIA.

ENG. FILE:

DWG. NO.: C991020 REV. 1

SHEET 1 OF 1

W/G LADDER MOUNTING CLIP ASSEMBLIES

CLIP ASSEMBLY P/N	TOWER BRACE SIZE (L)	LADDER CLIP			J-BOLT		
		P/N	DWG. NO.	QUAN	P/N	DWG. NO.	QUAN
KY693	1-1/2"	H173	B820993	2	J44AA	B2942A	2
KY695	1-3/4"-2-1/2"	H173	B820993	2	J51A	B2947	2
KY697	3"	H174	B820993	2	J51A	B2947	2
KY1287A	3-1/2"-4"	H174	B820993	2	J107A	B2910B	2

20' W/G LADDER SECTION BILL OF MATERIAL (WL20FB4KD)

ITEM	QTY	PART NO.	DESCRIPTION	DWG NO.
1	2	WY3425	20' W/G LADDER RAIL	C840372
2	5	WY7460	LADDER RUNG (8 HOLE)	C901827
3	2	WY3498	SPLICE PLATE	B820858
4	4	250008G	3/8" WASHER	C770404
5	14	210005GA	3/8x1-1/4 BOLT ASSEMBLY	C770404
6	REF	SEE CHART	MOUNTING CLIP ASSY	SEE CHART

10' W/G LADDER SECTION BILL OF MATERIAL (WL10FB4KD)

ITEM	QTY	PART NO.	DESCRIPTION	DWG NO.
1	2	WY3426	10' W/G LADDER RAIL	C840372
2	3	WY7460	LADDER RUNG (8 HOLE)	C901827
3	2	WY3498	SPLICE PLATE	B820858
4	4	250008G	3/8" WASHER	C770404
5	10	210005GA	3/8x1-1/4 BOLT ASSEMBLY	C770404
6	REF	SEE CHART	MOUNTING CLIP ASSY	SEE CHART

* CLIP ASSEMBLY ORDERING INFO

ALL SECTIONS EXCEPT
12N THRU 16N: ORDER 3 CLIP ASSYS (SEE BRACE SIZE) WITH EACH 20' TOWER SECTION OR 2 CLIP ASSYS FOR EACH 10' TOWER SECTION

12N, 13N, 14N, 15N & 16N: ORDER 2 CLIP ASSYS (SEE BRACE SIZE) WITH EACH 20' OR 10' TOWER SECTION

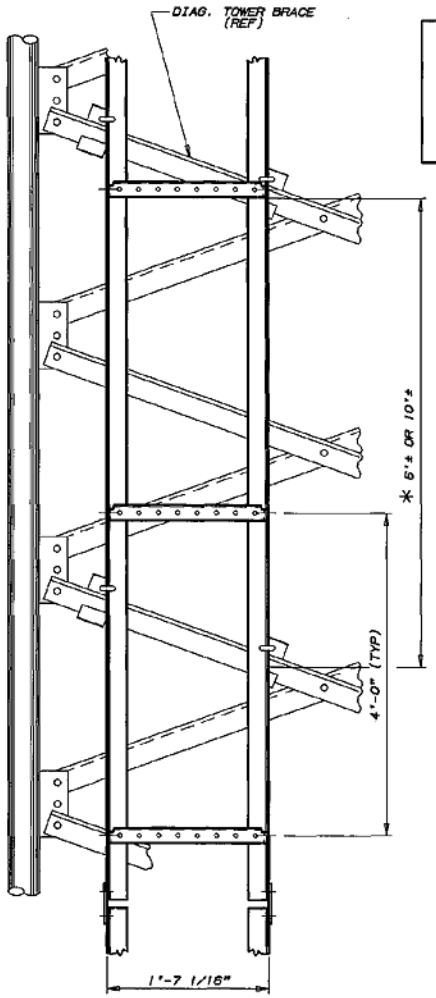

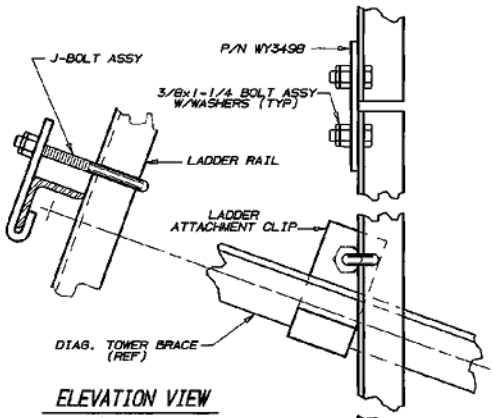

ELEVATION VIEW
(N.T.S.)

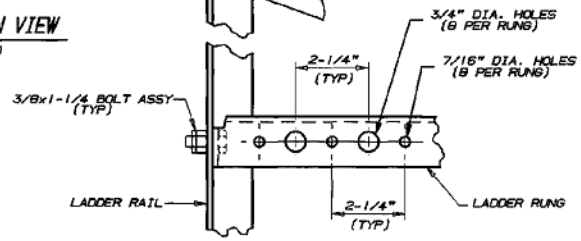

GENERAL NOTES

1. SPACE LADDER CLIPS AS SHOWN.
2. THE W/G LADDER MAY REQUIRE FIELD CUTTING TO THE PROPER LENGTH AFTER ASSEMBLY
3. W/G LADDER MAY BE MOVED HORIZONTALLY FOR PROPER ALIGNMENT.
4. WASHERS ARE PROVIDED FOR ALL SLOTTED HOLES.
5. W/G LADDER MAY BE MOUNTED INSIDE OR OUTSIDE OF TOWER AS REQUIRED.
6. THE W/G LADDER MUST BE OFFSET FROM THE CENTER OF THE TOWER WHEN USED WITH A FACE MOUNTED CLIMBING LADDER FOR REQUIRED CLEARANCES.

NOTE: IF CIRCULAR W/G IS USED, THREADED ADAPTERS, PROVIDED BY OTHERS, MAY BE REQUIRED TO PERFECTLY ALIGN W/G'S ON LADDER.

No. ▲ Revision Description ▲ Date ▲ Rev By ▲ Ckd By ▲ Appd By

R O H N

Scale: NONE	By	Date
Drawn:	WEB	10/26/90
Checked:	WDR	10/26/90
App. Eng.:	TB	10/26/90
App. Sales:	[illegible]	[illegible]

Title: LADDER ASSY W/G FACE MTD FOR SSV TOWERS 8 HOLE 4' KD 2.25" O.C. 3/4" & 7/16" DIA.

DRAWING NO.: C901828

W/G LADDER MOUNTING CLAMP ASSEMBLIES

CLAMP ASSEMBLY P/N	TOWER BRACE SIZE (O.D.)	LADDER CLAMP			J-BOLT		
		P/N	DWG. NO.	QUAN	P/N	DWG. NO.	QUAN
WY3080A	1-1/2"-2-3/8"	WY23	SK730352B	2	J44AA	B2942A	4
WY3081A	2-7/8"-3-1/2"	WY23	SK730352B	2	J51A	B2947	4
WY3082A	4"-4-1/2"	WY24	SK730352B	2	J51A	B2947	4
WY3083A	5-9/16"	WY25	SK730356B	2	J51A	B2947	4
WY4559A	6-5/8"	WY455B	B831316	2	J51A	B2947	4

CLAMP ASSEMBLY ORDERING INFO

ORDER 1 CLAMP ASSEMBLY (SEE BRACE SIZE) FOR EACH HORIZONTAL BRACE THAT THE W/G LADDER CROSSES.

20' W/G LADDER SECTION BILL OF MATERIAL (WL20FB4KD)

ITEM	QTY	PART NO.	DESCRIPTION	DWG NO.
1	2	WY3425	20' W/G LADDER RAIL	C840372
2	5	WY7460	LADDER RUNG (8 HOLE)	C901827
3	2	WY3498	SPLICE PLATE	B820868
4	4	250008G	3/8" WASHER	C770404
5	14	210005GA	3/8x1-1/4 BOLT ASSEMBLY	C770404
6	REF	SEE CHART	MOUNTING CLAMP ASSY	SEE CHART

10' W/G LADDER SECTION BILL OF MATERIAL (WL10FB4KD)

ITEM	QTY	PART NO.	DESCRIPTION	DWG NO.
1	2	WY3426	10' W/G LADDER RAIL	C840372
2	3	WY7460	LADDER RUNG (8 HOLE)	C901827
3	2	WY3498	SPLICE PLATE	B820868
4	4	250008G	3/8" WASHER	C770404
5	10	210005GA	3/8x1-1/4 BOLT ASSEMBLY	C770404
6	REF	SEE CHART	MOUNTING CLAMP ASSY	SEE CHART

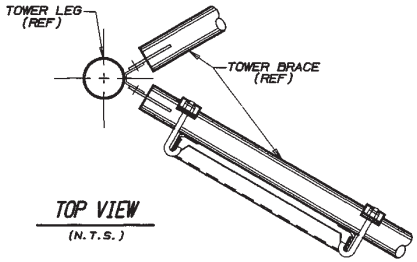

TOP VIEW
(N.T.S.)

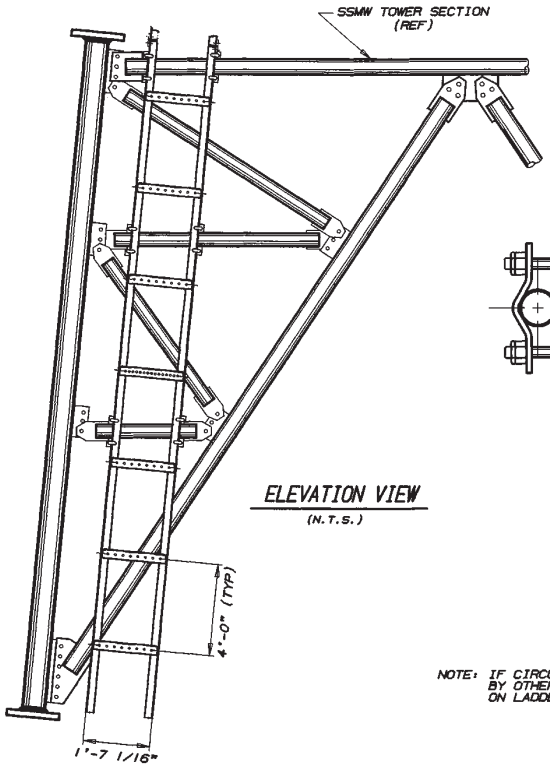

ELEVATION VIEW
(N.T.S.)

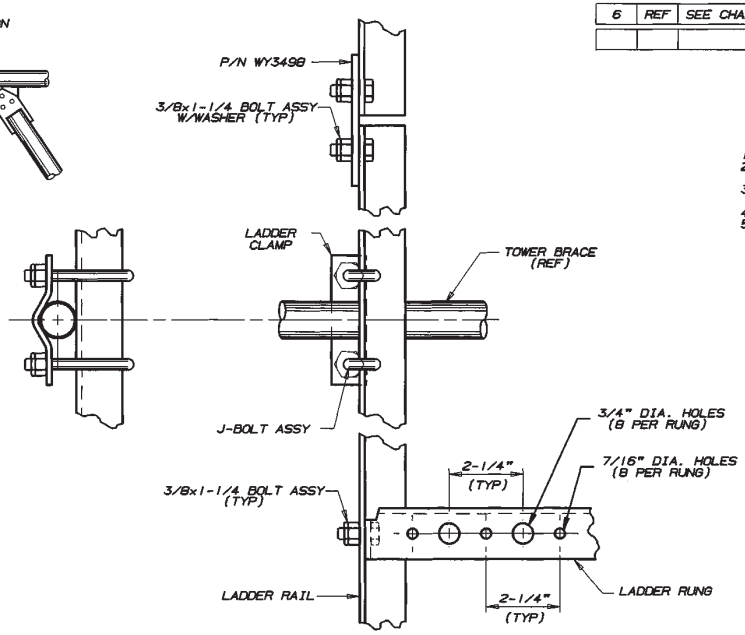

GENERAL NOTES

1. SPACE LADDER CLAMPS AS SHOWN.
2. THE W/G LADDER MAY REQUIRE FIELD CUTTING TO THE PROPER LENGTH AFTER ASSEMBLY
3. W/G LADDER MAY BE MOVED HORIZONTALLY FOR PROPER ALIGNMENT.
4. WASHERS ARE PROVIDED FOR ALL SLOTTED HOLES.
5. W/G LADDER MAY BE MOUNTED INSIDE OR OUTSIDE OF TOWER AS REQUIRED.

NOTE: IF CIRCULAR W/G IS USED, THREADED ADAPTERS, PROVIDED BY OTHERS, MAY BE REQUIRED TO PERFECTLY ALIGN W/G'S ON LADDER.

No. ▲ Revision Description	▲ Date	▲ Rev By	▲ Ckd By	▲ Appd By

R O H N

Scale: NONE	By	Date
Drawn:	WEB	10/26/90
Checked:	WRH	10-26-90
App. Eng.:	[illegible]	10/26/90
App. Sales:	[illegible]	10-26-90

Title: LADDER ASSY W/G FACE MTD FOR SSMW TOWERS 8 HOLE 4' KD 2.25" O.C. 3/4" & 7/16" DIA.

DRAWING NO.: C901829

W/G LADDER MOUNTING CLIP ASSEMBLIES

CLIP ASSEMBLY P/N	TOWER BRACE SIZE (L)	LADDER CLIP			J-BOLT		
		P/N	DWG. NO.	QUAN	P/N	DWG. NO.	QUAN
KY693	1-1/2"	H173	B820993	2	J44AA	B2942A	2
KY695	1-3/4"-2-1/2"	H173	B820993	2	J51A	B2947	2
KY697	3"	H174	B820993	2	J51A	B2947	2
KY1287A	3-1/2"-4"	H174	B820993	2	J170A	B2910B	2

* CLIP ASSEMBLY ORDERING INFO

ALL SECTIONS EXCEPT
12N THRU 16N: ORDER 3 CLIP ASSYS (SEE BRACE SIZE) WITH EACH 20' TOWER SECTION OR 2 CLIP ASSYS FOR EACH 10' TOWER SECTION

12N, 13N, 14N, 15N & 16N: ORDER 2 CLIP ASSYS (SEE BRACE SIZE) WITH EACH 20' OR 10' TOWER SECTION

20' W/G LADDER SECTION BILL OF MATERIAL (WL20F154KD)

ITEM	QTY	PART NO.	DESCRIPTION	DWG NO.
1	2	WY3425	20' W/G LADDER RAIL	C840372
2	5	WY7459	LADDER RUNG (15 HOLE)	C901822
3	2	WY3498	SPLICE PLATE	B820868
4	4	2500088	3/8" WASHER	C770404
5	14	2100058A	3/8x1-1/4 BOLT ASSEMBLY	C770404
6	REF	SEE CHART	MOUNTING CLIP ASSY	SEE CHART

10' W/G LADDER SECTION BILL OF MATERIAL (WL10F154KD)

ITEM	QTY	PART NO.	DESCRIPTION	DWG NO.
1	2	WY3426	10' W/G LADDER RAIL	C840372
2	3	WY7459	LADDER RUNG (15 HOLE)	C901822
3	2	WY3498	SPLICE PLATE	B820868
4	4	2500088	3/8" WASHER	C770404
5	10	2100058A	3/8x1-1/4 BOLT ASSEMBLY	C770404
6	REF	SEE CHART	MOUNTING CLIP ASSY	SEE CHART

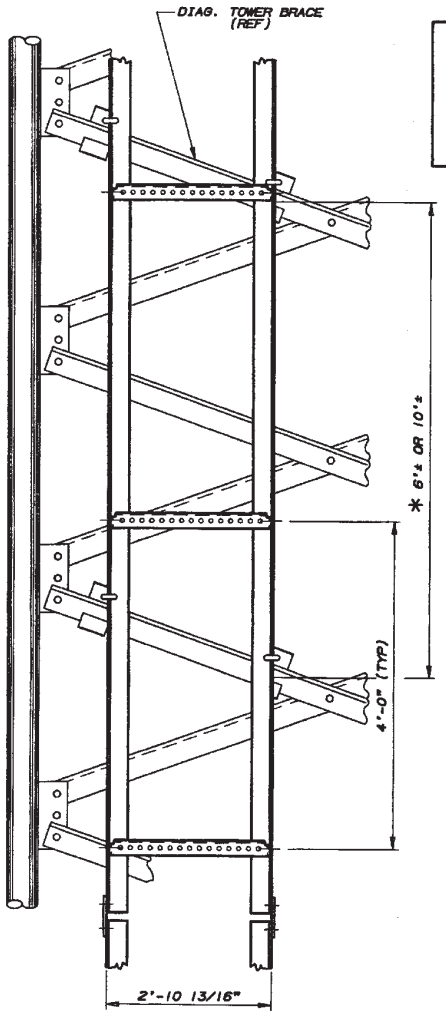

ELEVATION VIEW
(N.T.S.)

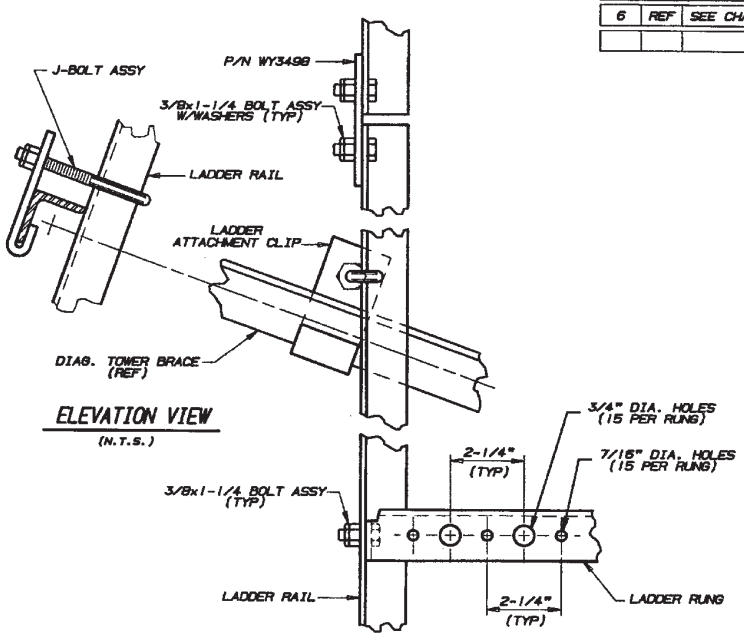

NOTE: IF CIRCULAR W/G IS USED, THREADED ADAPTERS, PROVIDED BY OTHERS, MAY BE REQUIRED TO PERFECTLY ALIGN W/G'S ON LADDER.

GENERAL NOTES

1. SPACE LADDER CLIPS AS SHOWN.
2. THE W/G LADDER MAY REQUIRE FIELD CUTTING TO THE PROPER LENGTH AFTER ASSEMBLY
3. W/G LADDER MAY BE MOVED HORIZONTALLY FOR PROPER ALIGNMENT.
4. WASHERS ARE PROVIDED FOR ALL SLOTTED HOLES.
5. W/G LADDER MAY BE MOUNTED INSIDE OR OUTSIDE OF TOWER AS REQUIRED.
6. THE W/G LADDER MUST BE OFFSET FROM THE CENTER OF THE TOWER WHEN USED WITH A FACE MOUNTED CLIMBING LADDER FOR REQUIRED CLEARANCES.

No.	Revision Description	Date	Rev By	Ckd By	Appd By
R1	REVISED B.O.M.	1-18-00	ACS		

ROHN

Scale: NONE	By	Date
Drawn:	WEB	10/24/90
Checked:	WDU	10/26/90
App. Eng.:	TS	10/26/90
App. Sales:	JC	10/26/90

Title: LADDER ASSY W/G FACE MTD FOR SSV TOWERS 15 HOLE 4' KD 2.25" O.C. 3/4" & 7/16" DIA.

DRAWING NO.: C901818 R1

W/G LADDER MOUNTING CLAMP ASSEMBLIES

CLAMP ASSEMBLY P/N	TOWER BRACE SIZE (O.D.)	LADDER CLAMP			J-BOLT		
		P/N	DWG. NO.	QUAN	P/N	DWG. NO.	QUAN
WY3080A	1-1/2"-2-3/8"	WY23	SK730352B	2	J44AA	B2942A	4
WY3081A	2-7/8"-3-1/2"	WY23	SK730352B	2	J51A	B2947	4
WY3082A	4"-4-1/2"	WY24	SK730352B	2	J51A	B2947	4
WY3083A	5-9/16"	WY25	SK730356B	2	J51A	B2947	4
WY4559A	6-5/8"	WY4558	B831316	2	J51A	B2947	4

CLAMP ASSEMBLY ORDERING INFO

ORDER 1 CLAMP ASSEMBLY (SEE BRACE SIZE) FOR EACH HORIZONTAL BRACE THAT THE W/G LADDER CROSSES.

20' W/G LADDER SECTION BILL OF MATERIAL (WL20F154KD)

ITEM	QTY	PART NO.	DESCRIPTION	DWG NO.
1	2	WY3425	20' W/G LADDER RAIL	C840372
2	5	WY7459	LADDER RUNG (15 HOLE)	C901822
3	2	WY3498	SPLICE PLATE	B820868
4	4	250008G	3/8" WASHER	C770404
5	14	210005GA	3/8x1-1/4 BOLT ASSEMBLY	C770404
6	REF	SEE CHART	MOUNTING CLAMP ASSY	SEE CHART

10' W/G LADDER SECTION BILL OF MATERIAL (WL10F154KD)

ITEM	QTY	PART NO.	DESCRIPTION	DWG NO.
1	2	WY3426	10' W/G LADDER RAIL	C840372
2	3	WY7459	LADDER RUNG (15 HOLE)	C901822
3	2	WY3498	SPLICE PLATE	B820868
4	4	250008G	3/8" WASHER	C770404
5	10	210005GA	3/8x1-1/4 BOLT ASSEMBLY	C770404
6	REF	SEE CHART	MOUNTING CLAMP ASSY	SEE CHART

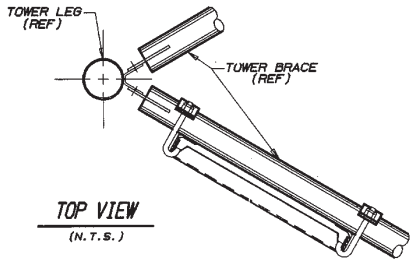

TOP VIEW
(N.T.S.)

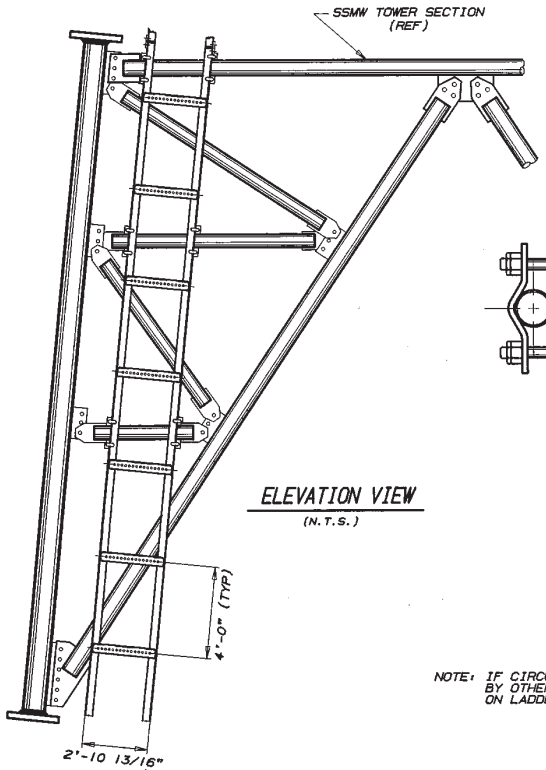

ELEVATION VIEW
(N.T.S.)

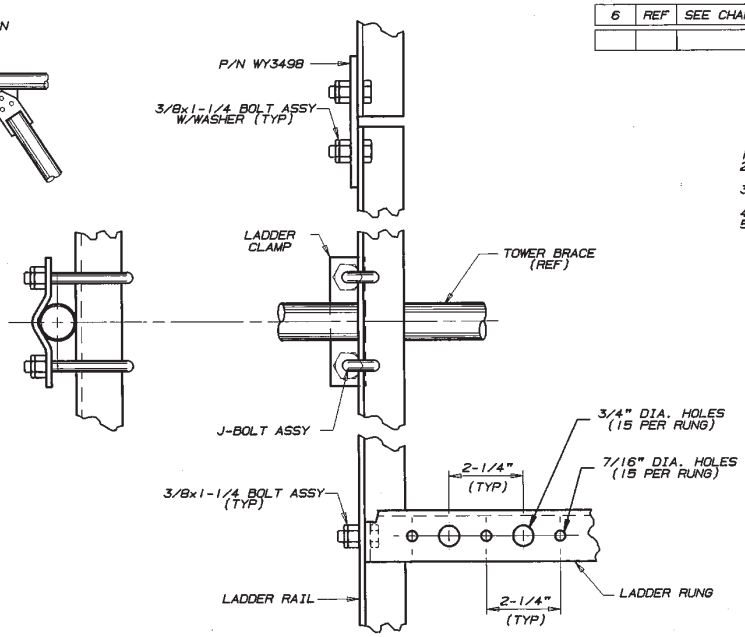

GENERAL NOTES

1. SPACE LADDER CLAMPS AS SHOWN.
2. THE W/G LADDER MAY REQUIRE FIELD CUTTING TO THE PROPER LENGTH AFTER ASSEMBLY
3. W/G LADDER MAY BE MOVED HORIZONTALLY FOR PROPER ALIGNMENT.
4. WASHERS ARE PROVIDED FOR ALL SLOTTED HOLES.
5. W/G LADDER MAY BE MOUNTED INSIDE OR OUTSIDE OF TOWER AS REQUIRED.

NOTE: IF CIRCULAR W/G IS USED, THREADED ADAPTERS, PROVIDED BY OTHERS, MAY BE REQUIRED TO PERFECTLY ALIGN W/G'S ON LADDER.

No. ▲ Revision Description	▲ Date	▲ Rev By	▲ Ckd By	▲ Appd By

R O H N

Scale: NONE	By	Date
Drawn:	WEB	10/24/90
Checked:	[illegible]	10-26-90
App. Eng.:	[illegible]	10-26-90
App. Sales:	[illegible]	10-26-90

Title: LADDER ASSY W/G FACE MTD FOR SSMW TOWERS 15 HOLE 4' KD 2.25" O.C. 3/4" & 7/16" DIA.

DRAWING NO.: C901819

20' W/G LADDER SECTION BILL OF MATERIAL (WL20F93KD)

ITEM	QTY	PART NO.	DESCRIPTION	DWG NO.
1	2	WY3425	20' W/G LADDER RAIL	C840372
2	7	WY8570	LADDER RUNG (9 HOLE)	C991003
3	2	WY3498	SPLICE PLATE	B820868
4	4	2500088	3/8" WASHER	C770404
5	18	2100058A	3/8x1-1/4 BOLT ASSEMBLY	C770404
6	6	H184	LADDER ATTACHMENT CLIP	B991808
7	6	J170AW	J-BOLT ASSY W/WASHER	A991694

10' W/G LADDER SECTION BILL OF MATERIAL (WL10F93KD)

ITEM	QTY	PART NO.	DESCRIPTION	DWG NO.
1	2	WY3426	10' W/G LADDER RAIL	C840372
2	4	WY8570	LADDER RUNG (9 HOLE)	C991003
3	2	WY3498	SPLICE PLATE	B820868
4	4	2500088	3/8" WASHER	C770404
5	12	2100058A	3/8x1-1/4 BOLT ASSEMBLY	C770404
6	4	H184	LADDER ATTACHMENT CLIP	B991808
7	4	J170AW	J-BOLT ASSY W/WASHER	A991694

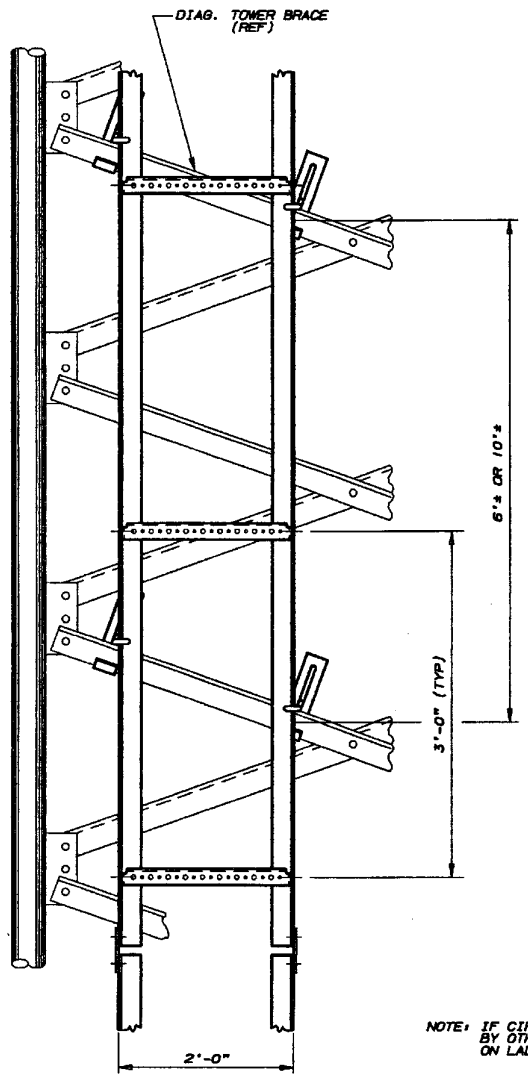

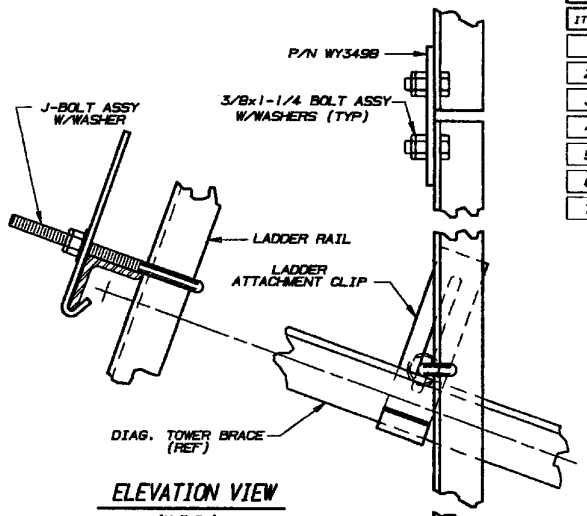

ELEVATION VIEW
(N.T.S.)

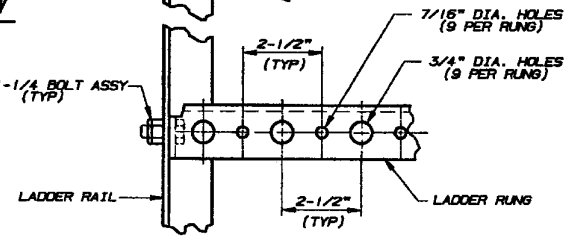

GENERAL NOTES

1. SPACE LADDER CLIPS AS SHOWN.
2. THE W/G LADDER MAY REQUIRE FIELD CUTTING TO THE PROPER LENGTH AFTER ASSEMBLY
3. W/G LADDER MAY BE MOVED HORIZONTALLY FOR PROPER ALIGNMENT.
4. WASHERS ARE PROVIDED FOR ALL SLOTTED HOLES.
5. W/G LADDER MAY BE MOUNTED INSIDE OR OUTSIDE OF TOWER AS REQUIRED.
6. THE W/G LADDER MUST BE OFFSET FROM THE CENTER OF THE TOWER WHEN USED WITH A FACE MOUNTED CLIMBING LADDER FOR REQUIRED CLEARANCES.

NOTE: IF CIRCULAR W/G IS USED, THREADED ADAPTERS, PROVIDED BY OTHERS, MAY BE REQUIRED TO PERFECTLY ALIGN W/G'S ON LADDER.

No. ▲ Revision Description	▲ Date	▲ Rev By	▲ Ckd By	▲ Appd By

ROHN

Scale: NONE	By	Date
Drawn:	SRH	05/10/99
Checked:	JDM	4-16-99
App. Eng.:	TS	6-16-99
Parent File:		

LADDER ASSY W/G FACE MTD FOR SSV TOWERS 9 HOLE 3' KD 2.50" O.C. 3/4" & 7/16" DIA.

ENG. FILE:

DWG. NO.: C991017

SHEET 1 OF 1

REV.

BILL OF MATERIAL ASS'Y NO. NL20FT

QUAN.*	PART NO.	DESCRIPTION	DWG. NO.
		20' SECTION	
1	NL 20	LADDER SECTION	SK-680905
2	KY 95	LADDER SPLICE PLATES	SK-680905
8	KH91	NO. 25 WINCH SADDLE CLAMP	B770214
4	210018GA	1/2×1 1/2 BOLT ASS'Y.	C770404
16	J44AA	J-BOLT ASS'Y.	B29-42A
		10' SECTION ASS'Y NO. NL10FT	
1	NL 10	LADDER SECTION	SK-680905
2	KY 95	LADDER SPLICE PLATE	SK-680905
4	KH91	NO. 25 WINCH SADDLE CLAMP	B770214
4	210018GA	1/2 × 1 1/2 BOLT ASS'Y.	C770404
8	J44AA	J-BOLT ASS'Y.	B29-42A

NOTES:

1. LADDER CAN BE MOUNTED INSIDE OR OUTSIDE OF TOWER AS REQUIRED.
* 2. QUANTITIES LISTED ARE FOR ONE LADDER SECTION ONLY.
3. SPACE CLAMPS & CLIPS AS SHOWN.

ANGULAR BRACING MOUNTING HARDWARE CHART

CLIP ASS'Y P/N**	BRACE SIZE	LADDER CLIP (2 REQ'D) PT. NO.	LADDER CLIP (2 REQ'D) DWG. NO	J-BOLT (2 REQ'D) PT. NO.	J-BOLT (2 REQ'D) DWG. NO.
KY693	L1 1/2"	H173	B820993	J44AA	B29 42A
KY693	L1 3/4"	H173	B820993	J44AA	B29 42A
KY695	L2"	H173	B820993	J51A	B29 47
KY695	L2 1/2"	H173	B820993	J 51A	B29 47
KY697	L3"	H174	B820993	J 51A	B29 47
KY1287A	L3 1/2"	H174	B820993	J107A	B29 108
KY1287A	L4"	H174	B820993	J107A	B29 108

R9

** 4-REQUIRED FOR 20' SECTIONS; 2-REQUIRED FOR 20' (2-BAY) SECTIONS & AND FOR ALL 10' SECTIONS.

BILL OF MATERIAL ASS'Y NO. NL20FA

QUAN.*	PART NO.	DESCRIPTION	DWG. NO.
		20' SECTION	
1	NL 20	LADDER SECTION	SK-680905
2	KY 95	LADDER SPLICE PLATE	SK-680905
REF.	SEE CHART	LADDER CLIP	SEE CHART
4	210018GA	1/2×1 1/2" BOLT ASS'Y.	C770404
REF.	SEE CHART	J-BOLT ASS'Y.	SEE CHART
		10' SECTION ASS'Y NO NL10FA	
1	NL 10	LADDER SECTION	SK-680905
2	KY 95	LADDER SPLICE PLATE	SK-680905
REF.	SEE CHART	LADDER CLIP	SEE CHART
4	210018GA	1/2×1 1/2 BOLT ASS'Y	C770404
REF.	SEE CHART	J-BOLT ASS'Y	SEE CHART

R2 NOTE: AN ADDITIONAL 10 FEET OF LADDER IS PROVIDED WITH ALL TOWERS 200' & OVER. LADDER TO BE FIELD CUT TO PROPER LENGTH AFTER ASS'Y.

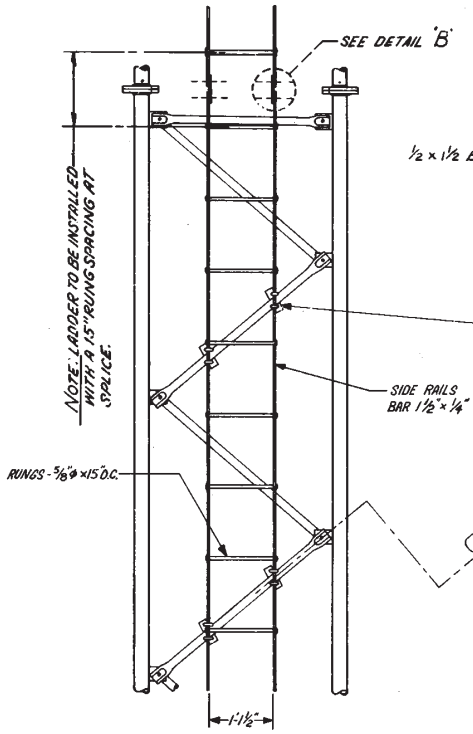

TUBULAR BRACING

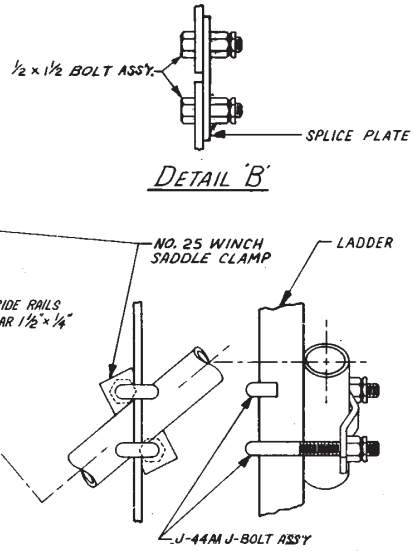

DETAIL 'B'

PROFILE VIEW

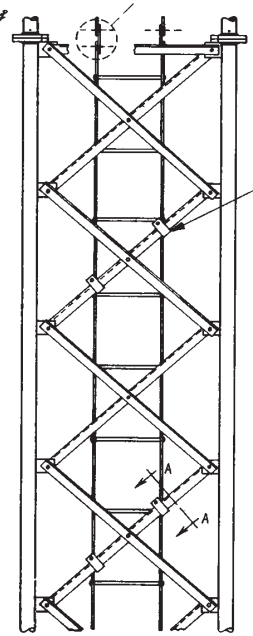

ANGULAR BRACING

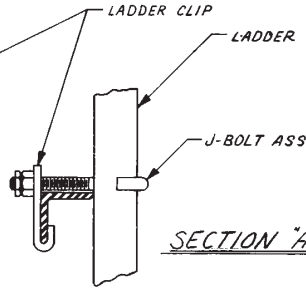

SECTION "AA"

R12 NOTE IT IS RECOMMENDED A ROHN-LOC SAFETY DEVICE BE PROVIDED WITH LADDER INSTALLATIONS FOR ADDED CLIMBER SAFETY.

R13	ADDED MOUNTING HOLES for 3 1/2 & 4" (for SSV)	12-29-87	DPW
R12	ADDED ROHN LOC NOTE	1-30-85	GLJ
R11	Rev. LAD. CLIP, WERE H57, H56, H80, H119, H84, Chg'd to Dwg.*	2-2-84	RKB
R10	J44AA WAS J44A, REMOVED WASHERS	4-11-83	RKB

NO.	DESCRIPTION	DATE	BY
R9	ADD ASSEMBLY AND PART NUMBERS	7-22-80	AJG
R8	ADD PART NOS.	10-3-78	WPL
R7	REVISE R6 NOTE	1-13-77	WPL
R6	ADDED NOTE	7-1-75	WPL
R5	ADDED RUNG SPACING NOTE & REVISED SPLICE R2	5-23-75	DJH
R4	ADD 3" ANGLE BRACE	5-22-75	WPL
R3	REVISED & REDRAWN	12-5-74	RDB

REVISIONS

ROHN® MANUFACTURING
DIVISION OF MASCO CORP.

TITLE: FACE MOUNTED STD. LADDER ASS'Y FOR GUYED TOWERS & SSV TOWERS

THIS DRAWING IS THE PROPERTY OF ROHN. IT IS NOT TO BE REPRODUCED, COPIED, OR TRACED IN WHOLE OR IN PART WITHOUT OUR WRITTEN CONSENT.

FILE NO.

SCALE NONE	MATERIAL	FINISH	WT.
DWN. BY RDB	DATE 12-5-74	UNLESS OTHERWISE SPECIFIED, DIMENSIONS ARE GIVEN IN INCHES.	
CKD. BY WPL	DATE 12-17-74	TOLERANCES DEC. ± FRAC. ± ANGLES ±	DWG. NO. C 700227 R13
APPD. BY CW	DATE 12-20-74		
APPD. BY BR	DATE 12-26-74		

GAF 880-880 2-72 48194

PRINTED IN U.S.A.

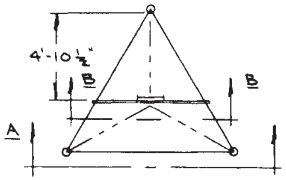

- PLAN -

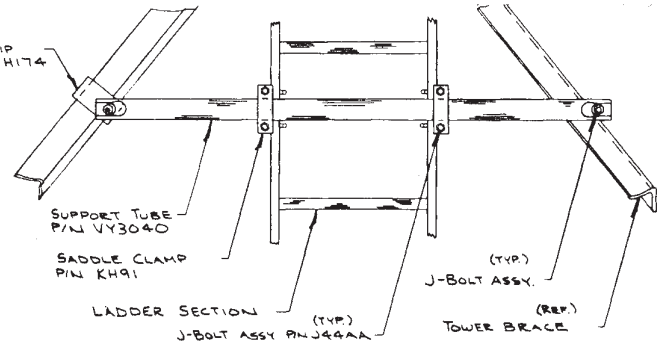

NOTE: IT IS RECOMMENDED A ROHN-LOC SAFETY DEVICE BE PROVIDED WITH LADDER INSTALLATIONS FOR ADDED CLIMBER SAFETY.

SECTION 'B-B'

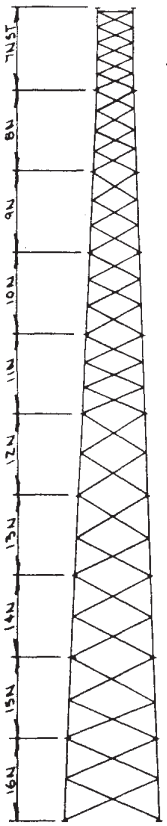

TYP. TOWER SECTIONS

— ELEVATION —

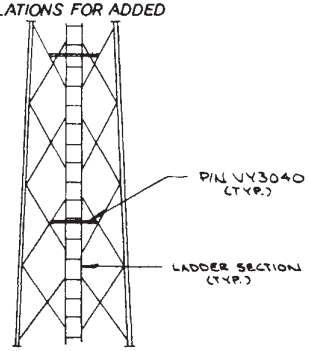

8N (4 BAYS)
(SECTION 'A-A')

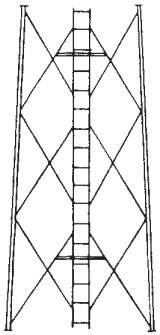

9N-11N (3 BAYS)
(SECTION 'A-A')

NOTE: SEE CHART BELOW FOR LOCATION OF P/N VY3040 ON INDIVIDUAL TOWER SECTIONS.

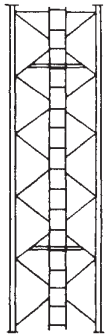

7NST (5 BAYS)
(SECTION 'A-A')

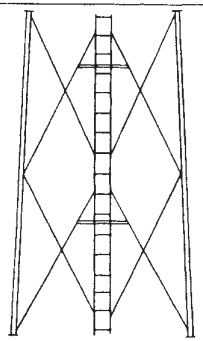

12N-16N (2 BAYS)
(SECTION 'A-A')

NOTE: AN ADDITIONAL 10 FEET OF LADDER IS PROVIDED WITH ALL TOWERS 200 FEET AND OVER. LADDER IS TO BE FIELD CUT TO PROPER LENGTH AFTER INSTALLATION.

LADDER CONNECTION LOCATION CHART

20' SECTIONS		10' SECTIONS	
SECT.	ELEVATION ±	SECT.	ELEVATION ±
7NST	5'-0", 16'-0"	7NST	1'-6", 9'-0"
8N, 8NST	7'-0", 18'-0"	8N, 8NST	2'-6", 8'-0"
9N, 9NST	5'-0", 17'-6"	9N, 9NST	1'-0", 7'-6"
10N	5'-0", 17'-6"	10N	1'-0", 7'-6"
11N	5'-0", 17'-6"	11N	1'-0", 7'-6"
12N	7'-0", 17'-0"		
13N	7'-0", 17'-0"		
14N	7'-0", 17'-0"		
15N	7'-0", 17'-0"		
16N	7'-0", 17'-0"		

NOTE: SECTION 'A-A' VIEWS ARE INCOMPLETE FOR CLARITY OF INSTALLATION

ASSY. P/N VY3092A (10' SECTION) FOR 1½" - 2½" BRACE

ITEM	QTY.	PART NO.	DESCRIPTION	DWG. NO.
1	1	NL10	10'-0" LADDER SECTION	SK680905
2	2	KY95	LADDER SPLICE PLATE	SK680905
3	2	VY3040	LADDER SUPPORT TUBE	B820864
4	4	Z1001BGA	½" x 1½" BOLT ASSY.	C770404
5	12	J44AA	⅜" J-BOLT ASSY	B2942A
6	4	KH91	SADDLE CLAMP	B770214
7	2	H173	LADDER CLIP	B820993

ASSY. P/N VY3093A (20' SECTION) FOR 1½" - 2½" BRACE

ITEM	QTY.	PART NO.	DESCRIPTION	DWG. NO.
1	1	NL20	20'-0" LADDER SECTION	SK680905
2	2	KY95	LADDER SPLICE PLATE	SK680905
3	2	VY3040	LADDER SUPPORT TUBE	B820864
4	4	Z1001BGA	½" x 1½" BOLT ASSY.	C770404
5	12	J44AA	⅜" J-BOLT ASSY.	B2942A
6	4	KH91	SADDLE CLAMP	B770214
7	2	H173	LADDER CLIP	B820993

ASSY. P/N VY3094A (10' SECTION) FOR 3" - 4" BRACE

ITEM	QTY.	PART NO.	DESCRIPTION	DWG. NO.
1	1	NL10	10'-0" LADDER SECTION	SK680905
2	2	KY95	LADDER SPLICE PLATE	SK680905
3	2	VY3040	LADDER SUPPORT TUBE	B820864
4	4	Z1001BGA	½" x 1½" BOLT ASSY.	C770404
5	4	J51A	⅜" J-BOLT ASSY.	B2947
6	4	KH91	SADDLE CLAMP	B770214
7	8	J44AA	⅜" J-BOLT ASSY	B2942A
8	2	H174	LADDER CLIP	B820993

ASSY. P/N VY3095A (20' SECTION) FOR 3"-4" BRACE

ITEM	QTY.	PART NO.	DESCRIPTION	DWG. NO.
1	1	NL20	20'-0" LADDER SECTION	SK680905
2	2	KY95	LADDER SPLICE PLATE	SK680905
3	2	VY3040	LADDER SUPPORT TUBE	B820864
4	4	Z1001BGA	½" x 1½" BOLT ASSY.	C770404
5	4	J51A	⅜" J-BOLT ASSY.	B2947
6	4	KH91	SADDLE CLAMP	B770214
7	8	J44AA	⅜" J-BOLT ASSY.	B2942A
8	2	H174	LADDER CLIP	B820993

No.	Revision Description	Date	By
R1	ADDED ROHN-LOC NOTE	1-30-85	GLJV

UNR-Rohn
Division of UNR, Inc

Title: LADDER, ASSY INSIDE COR. (7NST-16N)

Scale: NONE

Drawn by: AWG 12/29/82

Checked by: WHL/GPW 17 JAN 83

Approved by Engineering: TS 1-19-83

Approved by Production:

Approved by Sales: JC 1-19-83

Unless otherwise specified, dimensions are given in inches. Tolerances: Decimals ±, Fractions ±, Angles ±. Material, Finish, Weight.

File Number

Drawing Number: C821692 R1

ASSEMBLY BOLT INSTALLATION:
ALL TOWER ASSEMBLY BOLTS ARE TO BE INSERTED OUT AND/OR UP (I.E. WITH NUTS AND PAL NUTS ON OUTSIDE OF TOWER FACE AND/OR ON TOP OF FLANGE PLATES) UNLESS PROHIBITED BY LACK OF CLEARANCE

ALL ASSEMBLY AND ANCHOR BOLTS ARE TO BE TIGHTENED IN ACCORDANCE WITH ANSI/EIA-222-E SECTION 1.1.3.2 - (WHERE HIGH-STRENGTH BOLTS ARE USED FOR BEARING-TYPE CONNECTIONS, AS A MINIMUM, THE BOLTS SHALL BE TIGHTENED TO A " SNUG TIGHT" CONDITION AS DEFINED IN THE NOVEMBER 13,1985, AISC, "SPECIFICATION FOR STRUCTURAL JOINTS USING ASTM A325 OR A490 BOLTS".)

FLAT WASHERS ARE TO BE INSTALLED WITH BOLTS OVER SLOTTED HOLES.
CAUTION: DO NOT OVER-TORQUE! GALVANIZING ON BOLTS, NUTS, AND STEEL PARTS MAY ACT AS A LUBRICANT, THUS OVER-TIGHTENING MAY OCCUR AND MAY CAUSE BOLTS TO CRACK AND SNAP OFF.

PAL NUT INSTALLATION
PAL NUTS ARE TO BE INSTALLED AFTER NUTS ARE TIGHT AND WITH EDGE LIP OUT. (SEE PICTURE) PAL NUTS NOT REQUIRED WHEN SELF-LOCKING NUTS ARE PROVIDED.

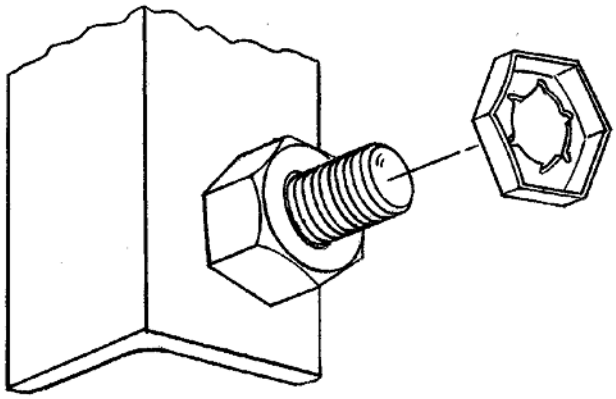

No. ▲	Revision Description	▲Date	▲By
R2	UPGRADE FOR E.I.A. REV E	8-4-92	[illegible]
R1	UPGRADE FOR EIA REV. D	12-29-87	FHT/JHD/

Unarco-Rohn
Division of Unarco Industries, Inc.

Title
BOLT ASSEMBLY INSTALLATION

Scale NONE
Drawn by O.H. Date 7-5-79
Checked by [illegible] Date 7-5-79
Approved by Engineering TS Date 7-5-79
Approved by Production Date
Approved by Sales [illegible] Date 7-10-79

Unless otherwise specified, dimensions are given in inches.
Tolerances
Decimals ± Fractions ± Angles ±
Material Finish Weight

File Number
Drawing Number A 790135 R2

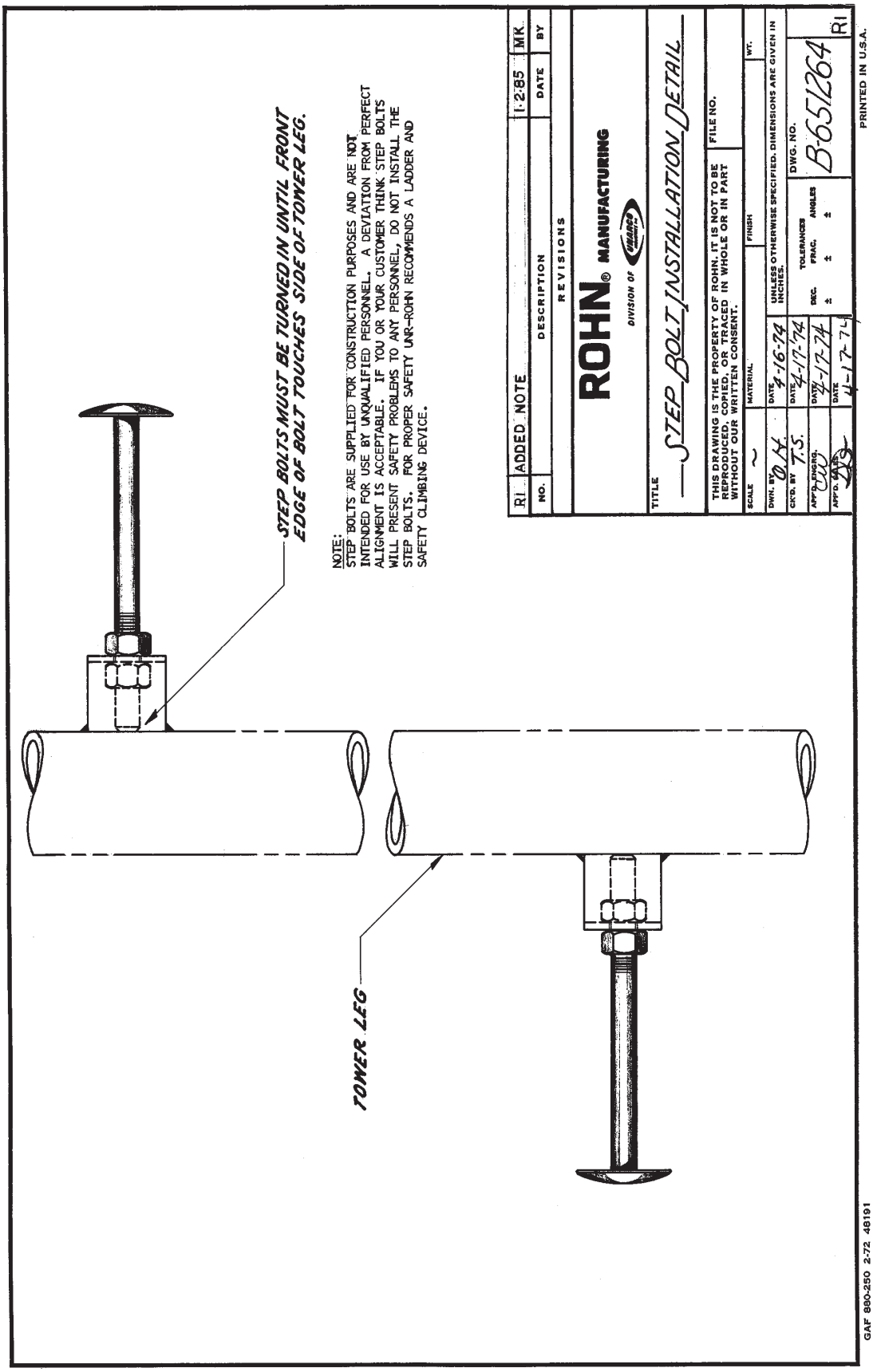
STEP BOLTS MUST BE TURNED IN UNTIL FRONT EDGE OF BOLT TOUCHES SIDE OF TOWER LEG.
NOTE:
STEP BOLTS ARE SUPPLIED FOR CONSTRUCTION PURPOSES AND ARE NOT INTENDED FOR USE BY UNQUALIFIED PERSONNEL. A DEVIATION FROM PERFECT ALIGNMENT IS ACCEPTABLE. IF YOU OR YOUR CUSTOMER THINK STEP BOLTS WILL PRESENT SAFETY PROBLEMS TO ANY PERSONNEL, DO NOT INSTALL THE STEP BOLTS. FOR PROPER SAFETY UNR-ROHN RECOMMENDS A LADDER AND SAFETY CLIMBING DEVICE.
TOWER LEG
R1 ADDED NOTE 1-2-85 MK
NO. DESCRIPTION DATE BY
REVISIONS
ROHN® MANUFACTURING
DIVISION OF
TITLE
STEP BOLT INSTALLATION DETAIL
THIS DRAWING IS THE PROPERTY OF ROHN. IT IS NOT TO BE REPRODUCED, COPIED, OR TRACED IN WHOLE OR IN PART WITHOUT OUR WRITTEN CONSENT.
FILE NO.
SCALE ~
FINISH
MATERIAL
WT.
DWN. BY O.H. DATE 4-16-74
UNLESS OTHERWISE SPECIFIED, DIMENSIONS ARE GIVEN IN INCHES.
CK'D. BY T.S. DATE 4-17-74
TOLERANCES
DEC. ±
FRAC. ±
ANGLES ±
DWG. NO.
B-651264
R1
APP'D-ENGRG. DATE 4-17-74
APP'D. DATE 4-17-74
PRINTED IN U.S.A.
GAF 880-250 2-72 48191

ROHN™ Products

Poles

Products for a Growing World of Technology

ROHN™ Products

Poles

Conserve Valuable Land Space

ROHN offers a variety of pole types to meet your specific communication requirements. Our tapered steel, flanged steel, fiberglass and concrete poles all feature designs that blend well into the environment and require minimum space for installation. Specifically designed to your requirements, ROHN poles meet the stringent demands of today's communications environment.

ROHN Poles

Monopoles

Conserving valuable land space is paramount. ROHN offers a variety of monopole types to meet your specific communication needs. Our tapered and flanged steel poles feature designs that are aesthetically pleasing and blend well into the environment while requiring minimum space for installation. ROHN monopoles meet the stringent demands of today's communication environment.

Tapered Steel Poles

ROHN Tapered Steel Poles are designed with base diameters from 2′ to 6′. These minimal site requirements lower lease rates or acquisition costs. And these poles are designed for rapid installation, making them ready for service quickly while meeting the demands of today's PCS, cellular, and other communication environments.

Backed by one of the largest manufacturers of communication structures, with unmatched attention to detail and design, ROHN Tapered Steel Poles offer extremely efficient strength to cost ratio.

All ROHN Tapered Steel Poles are Hot Dip Galvanized for long lasting corrosion protection and full scale testing of the poles has been performed for research and safety purposes. ROHN provides structure and foundation design services with approved engineering documents, in any state, by a registered professional engineer.

Additional Features of ROHN Tapered Steel Poles

- Fast easy installation
- Rotatable mounting frames, platforms, sidearms
- Heights in excess of 200′
- Microwave capable
- Standard or custom designs
- Minimal space requirements
- Optional factory paint
- Internal routing of transmission lines
- Removable climbing steps
- Full line of accessories including: obstruction lighting, safety climbing systems, grounding and special antenna mounts

Secure Solutions

Camera surveillance equipment must be mounted on secure unaccessible structures. Particularly in remote and rural areas where tall buildings and typical mounting methods are not practical or are non-existent. Equally challenging, are sites that are heavily congested or in rough terrain. ROHN monopoles are the right fit for any site.

Sports Lighting

Whatever your application - from little league baseball to a major league stadium, ROHN has a tapered steel pole to do the job. Poles are available with the traditional anchor base or for direct embedment. ROHN's engineering will select the proper pole based on your specific requirements, considering wind speed, luminaire size, weight and quantity.

Flanged Steel Poles

ROHN Flanged Steel Poles are easy to handle and install. Precision fitted connections allow quick assembly of the modular sections and the top platform, sidearms or mounting frame. And ROHN Steel Poles are Hot Dip Galvanized for long lasting corrosion protection.

GENERAL NOTES

1. WASHERS ARE PROVIDED WITH ALL SLOTTED HOLES.
2. ITEM NUMBER 6 & 7 MAY BE ARRANGED IN SUCH A MANNER TO ACCOMODATE THE ROHN-LOC SAFETY DEVICE BY SLIDING WALKWAYS FROM ONE END TO THE OTHER.
4. CHECK AND, IF REQUIRED, RETIGHTEN ALL BOLTS AFTER ANTENNA INSTALLATION AND AT EACH SCHEDULED INSPECTION THEREAFTER.

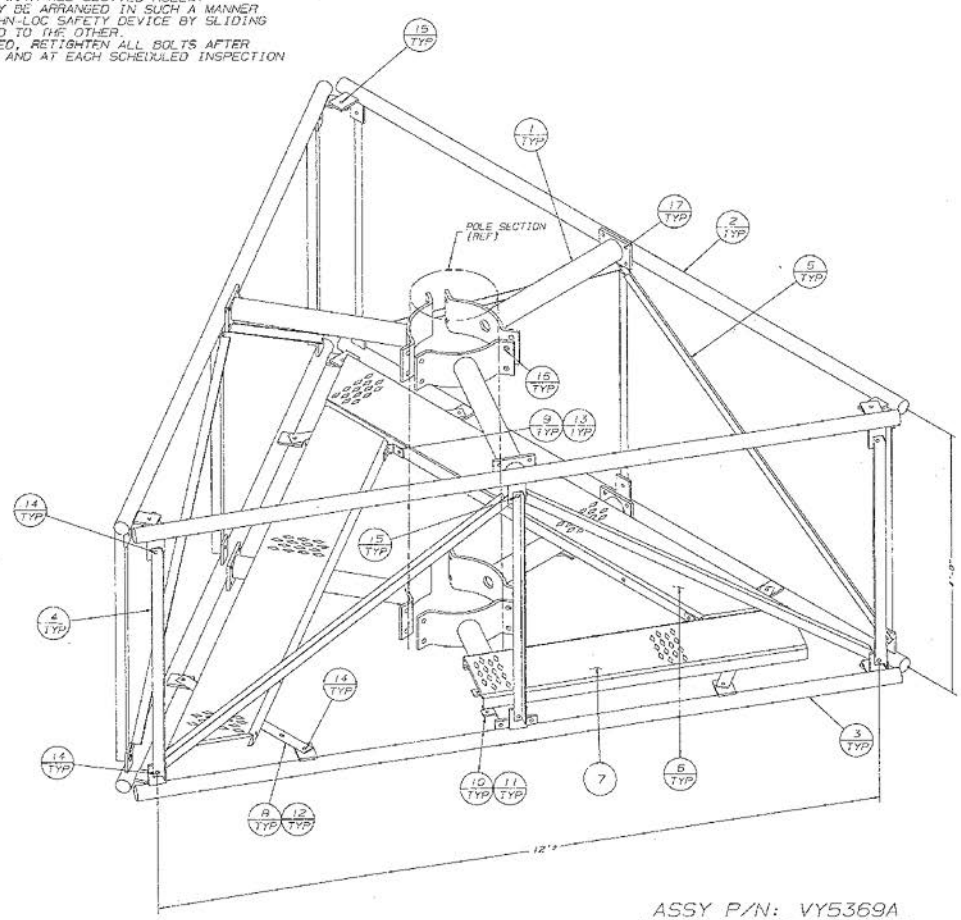

ASSY P/N: VY5369A

BILL OF MATERIAL

ITEM	QUAN.	PART NO.	DESCRIPTION	DWG. NO.
1	6	VY5369	SIDE ARM CLAMP	D960791
2	3	VY4953	UPPER MOUNTING PIPE	B932772
3	3	VY4965	LOWER MOUNTING PIPE	B932773
4	9	VY4735	VERTICAL BRACE	B921153
5	6	VY4961	DIAG. BRACE	B932769
6	2	VX2698	WALKWAY PANEL	B932765
7	1	VX2699	WALKWAY PANEL	B932767
8	3	VY4737	WALKWAY SUPPORT ANGLE	B921157
9	2	S91G	CLIP	B830930
10	6	W123	SADDLE CLAMP	SK7100528
11	12	J107A	J-BOLT ASSY	D29109
12	8	J44AAW	J-BOLT ASSY W/WASHERS	B29427A
13	4	2100170A	1/2" X 1-1/4" BOLT ASSY	C770404
14	21	2100186A	1/2" X 1-1/2" BOLT ASSY	C770404
15	9	2100190A	1/2" X 1-3/4" BOLT ASSY	C770404
16	12	2101833GA	3/4" X 5" BOLT ASSY (FULL THREAD)	N/A
17	12	JB83A	U-BOLT ASSY	B851028

No.	Revision Description	Date	Rev By	Chd By	Appd By

ROHN

Section Head	By	Date
Drawn:	JCM	2-22-96
Checked:	WRG	2-27-96
Asm. Engr.:	[illegible]	2-27-96
Asm. Tester:	[illegible]	2-27-96

Title: POLE MOUNTING FRAME WITH WALKWAY FOR 36" POLE

END. FILE:

DRAWING NO.: D960668

GENERAL NOTES

1. WASHERS ARE PROVIDED WITH ALL SLOTTED HOLES.
2. ITEM NUMBER 6 & 7 MAY BE ARRANGED IN SUCH A MANNER TO ACCOMODATE THE ROHN-LOC SAFETY DEVICE BY SLIDING WALKWAYS FROM ONE END TO THE OTHER.
4. CHECK AND, IF REQUIRED, RETIGHTEN ALL BOLTS AFTER ANTENNA INSTALLATION AND AT EACH SCHEDULED INSPECTION THEREAFTER.

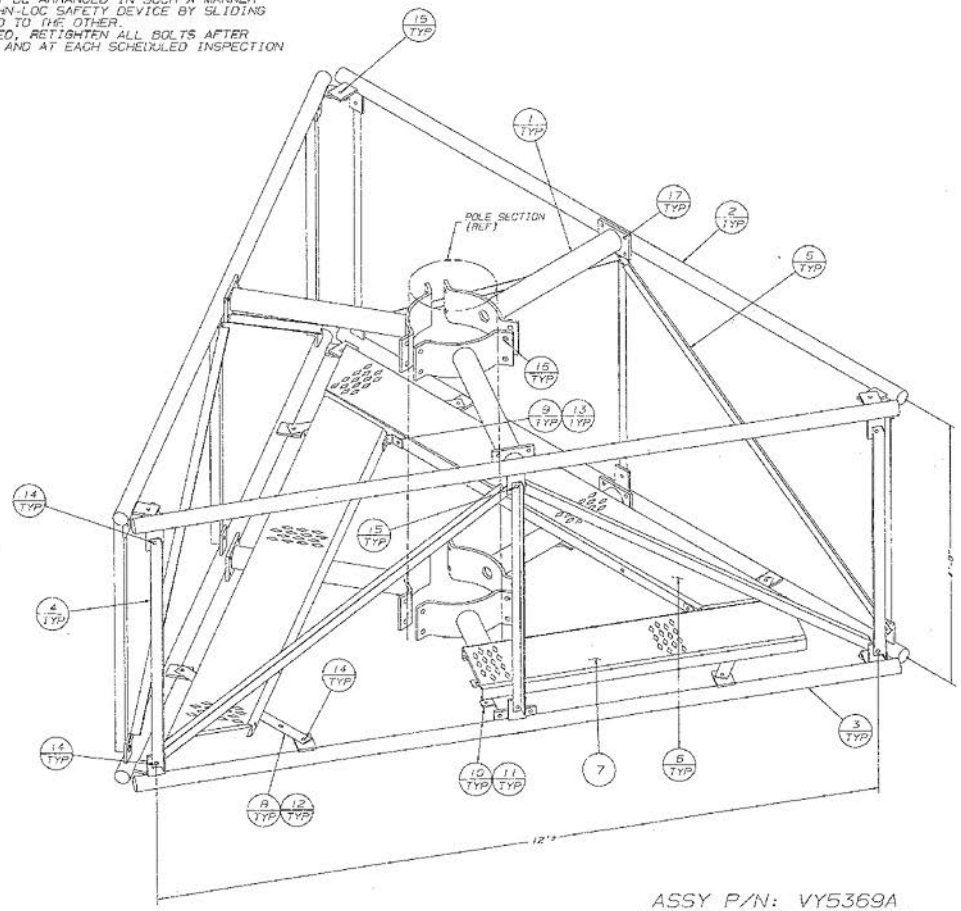

ASSY P/N: VY5369A

BILL OF MATERIAL

ITEM	QUAN.	PART NO.	DESCRIPTION	DWG. NO.
1	6	VY5369	SIDE ARM CLAMP	C960791
2	3	VY4953	UPPER MOUNTING PIPE	B932772
3	3	VY4965	LOWER MOUNTING PIPE	B932773
4	9	VY4735	VERTICAL BRACE	B921155
5	6	VY4961	DIAG. BRACE	B932769
6	2	VX2698	WALKWAY PANEL	B932765
7	1	VX2699	WALKWAY PANEL	B932767
8	3	VY4737	WALKWAY SUPPORT ANGLE	B921157
9	2	S91G	CLIP	B830930
10	6	W23	"RADOZ" CLAMP	SK7306526
11	12	J107A	J-BOLT ASSY	D291108
12	8	J444AW	J-BOLT ASSY W/WASHERS	B29412A
13	4	2100175A	1/2" X 1-1/4" BOLT ASSY	C770404
14	21	2100186A	1/2" X 1-1/2" BOLT ASSY	C770404
15	9	2100199A	1/2" X 1-3/4" BOLT ASSY	C770404
16	12	2101835A	3/4" X 5" BOLT ASSY (FULL THREAD)	N/A
17	12	J983A	U-BOLT ASSY	B851028

No.	Revision Description	Date	Dwn By	Chkd By	Appd By

ROHN

Scale: NONE	By	Date
Drawn:	JCM	2-22-96
Checked:	WRG	2-27-96
Appr. Engr.:	JK	2-27-96
Appr. Sales:	TR	2-27-96

Title: POLE MOUNTING FRAME WITH WALKWAY FOR 38" POLE

End. File:

Drawing No.: D960668

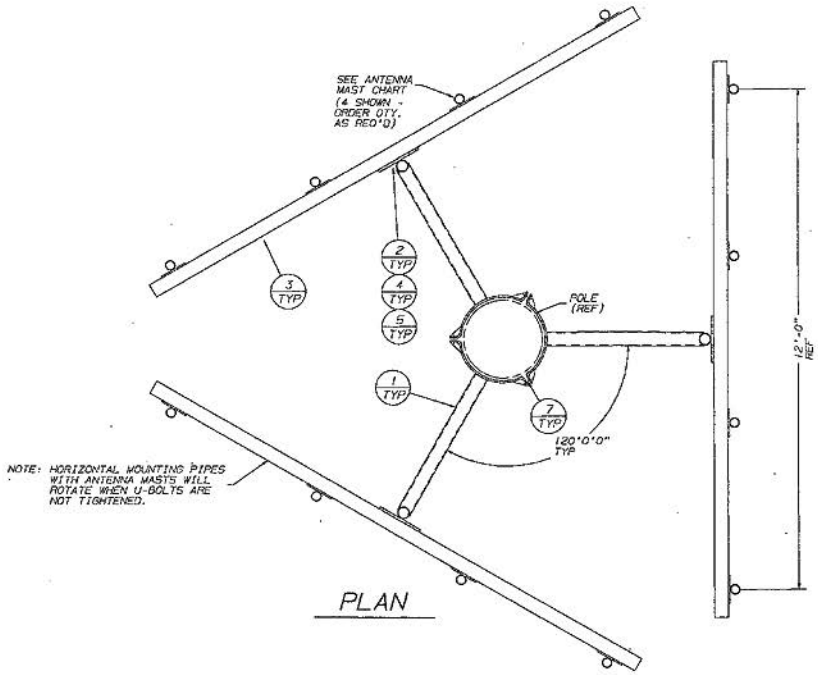

PLAN

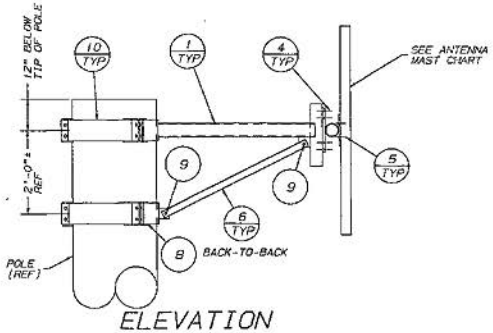

ELEVATION

ONLY ONE ARM SHOWN FOR CLARITY

BILL OF MATERIAL						
ITEM	QUAN.	QUAN.	QUAN.	PART NO.	DESCRIPTION	DWG. NO.
1	1	2	3	VY5390	CLAMP WELDMENT	C990852
2	1	2	3	VY5218	PLATE (5/8")	C951612
3	1	2	3	KH2256	PIPE 3.5STD X 13'-4" LONG	8770160
4	4	8	12	JR88A	U-BOLT ASSY (3" PIPE)	8851028
5	4	8	12	JR89A	U-BOLT ASSY (3.5" PIPE)	8851028
6	2	4	6	VY5380	ANGLE 2X2X1/8 (KNEE BRACE)	8981516
7	12	12	12	2101346A	3/4" X 7-1/2" BOLT ASSY	N/A
8	1	2	3	VY5320	CLAMP W/PLATE	8981389
9	2	4	6	2100306A	5/8" X 1-3/4" BOLT ASSY	C770404
10	4	2	---	VY5430	CLAMP W/PLATES	8981799

VY5391A (3-WAY MOUNT)
VY5432A (2-WAY MOUNT)
VY5431A (1-WAY MOUNT)

ORDERING INFO:

(1) ANTENNA MOUNT ASSY
(AS REQ'D) ANTENNA MASTS

ANTENNA MAST CHART			
QUAN.	VY5222A 2 STD X 5' LONG	VY5223A 2 EH X 8' LONG	VY5246A 2.5 EH X 8' LONG
1	KH275	KH62229	KH62987
1	KH4750	KH4750	KH4750
2	JR83AW	JR83AW	JR84AW
2	JR89AW	JR89AW	JR89AW

R2	ADDED NOTE	2-19-97	JDM	WKJr.	TS
R1	ADD'D P/N'S VY5431A & VY5432A	5-15-96	JDM	WDU	TS
No.	Revision Description	Date	Rev By	Chd By	Appd By

ROHN

Special NOTE	By	Date
Drawn:	JDM	3-11-96
Checked:	WDU	3-18-96
App. Eng.:	TS	3-18-96
App. Sales:	TR	3-18-96

Title: ANTENNA MOUNT ASSY (24" DIA. STEEL POLE)

ENG. FILE:

DRAWING NO.: D950686 R2

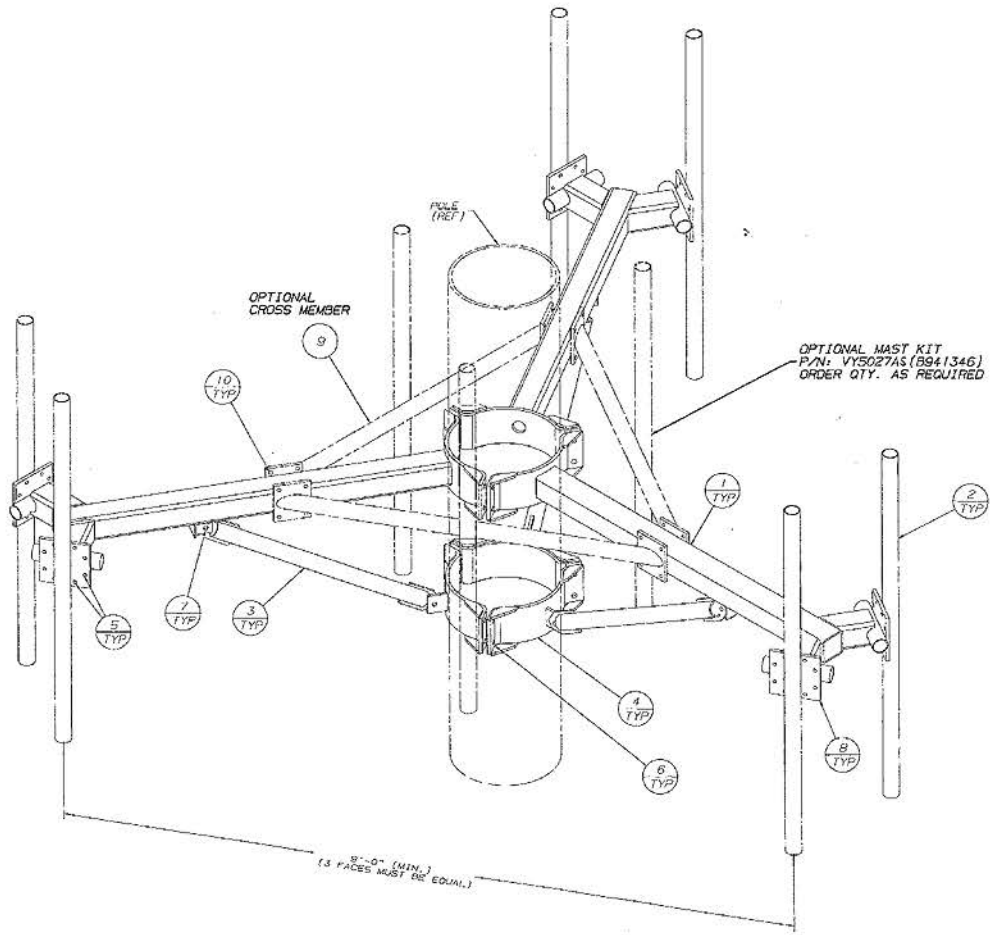

W/ CROSS MEMBER TO SUPPORT OPTIONAL ANTENNA MAST

ASSY P/N: VY5313A (FOR 16" POLE)

BILL OF MATERIAL

ITEM	QUAN.	PART NO.	DESCRIPTION	DWG. NO.
1	3	VY5305	ANTENNA MOUNTING ARM	0960540
2	6	KN275	MOUNTING PIPE 2STD X 5' LONG	8770160
3	3	VY5143	KNEE BRACE	8951561
4	3	VY5305	CLAMP W/ LUG	0960647
5	24	JR83A	U-BOLT ASSY	8651028
6	12	2100516A	3/4" X 3" BOLT ASSY	C770404
7	6	2100316A	5/8" X 2" BOLT ASSY	C770404
8	6	VY5286	MOUNTING PLATE	8961387
9	3	VY5324	CROSS MEMBER	8981391
10	12	2100856A	1/2" X 6" BOLT ASSY	C770404

ASSY P/N: VY5314A (FOR 24" POLE)

BILL OF MATERIAL

ITEM	QUAN.	PART NO.	DESCRIPTION	DWG. NO.
1	3	VY5308	ANTENNA MOUNTING ARM	0960540
2	6	KN275	MOUNTING PIPE 2STD X 5' LONG	8770160
3	3	VY5143	KNEE BRACE	8951561
4	3	VY5320	CLAMP W/ LUG	8961389
5	24	JR83A	U-BOLT ASSY	8651028
6	12	2100516A	3/4" X 3" BOLT ASSY	C770404
7	6	2100316A	5/8" X 2" BOLT ASSY	C770404
8	6	VY5286	MOUNTING PLATE	8961387
9	3	VY5324	CROSS MEMBER	8981391
10	12	2100856A	1/2" X 6" BOLT ASSY	C770404

W/O CROSS MEMBER

ASSY P/N: VY5317A (FOR 16" POLE)

BILL OF MATERIAL

ITEM	QUAN.	PART NO.	DESCRIPTION	DWG. NO.
1	3	VY5305	ANTENNA MOUNTING ARM	0960540
2	6	KN275	MOUNTING PIPE 2STD X 5' LONG	8770160
3	3	VY5143	KNEE BRACE	8951561
4	3	VY5303	CLAMP W/ LUG	C960647
5	24	JR83A	U-BOLT ASSY	8651028
6	12	2100516A	3/4" X 3" BOLT ASSY	C770404
7	6	2100316A	5/8" X 2" BOLT ASSY	C770404
8	6	VY5286	MOUNTING PLATE	8961387

ASSY P/N: VY5318A (FOR 24" POLE)

BILL OF MATERIAL

ITEM	QUAN.	PART NO.	DESCRIPTION	DWG. NO.
1	3	VY5308	ANTENNA MOUNTING ARM	0960540
2	6	KN275	MOUNTING PIPE 2STD X 5' LONG	8770160
3	3	VY5143	KNEE BRACE	8951561
4	3	VY5320	CLAMP W/ LUG	8961389
5	24	JR83A	U-BOLT ASSY	8651028
6	12	2100516A	3/4" X 3" BOLT ASSY	C770404
7	6	2100316A	5/8" X 2" BOLT ASSY	C770404
8	6	VY5286	MOUNTING PLATE	8961387

No.	Revision Description	Date	Rev. By	Chk'd By	Appd By

ROHN

Status: NONE	By	Date
Drawn:	JJM	2-1-96
Checked:	VERN	2-5-96
App. Eng.:	TC	2-5-96
App. Sales:	JT	2/5/96

Title: 16" DIA. & 24" DIA. POLE LOW PROFILE ANTENNA MOUNT WITH DOWNTILTS (STANDARD)

Ext. File:

Drawing No.: 0950543

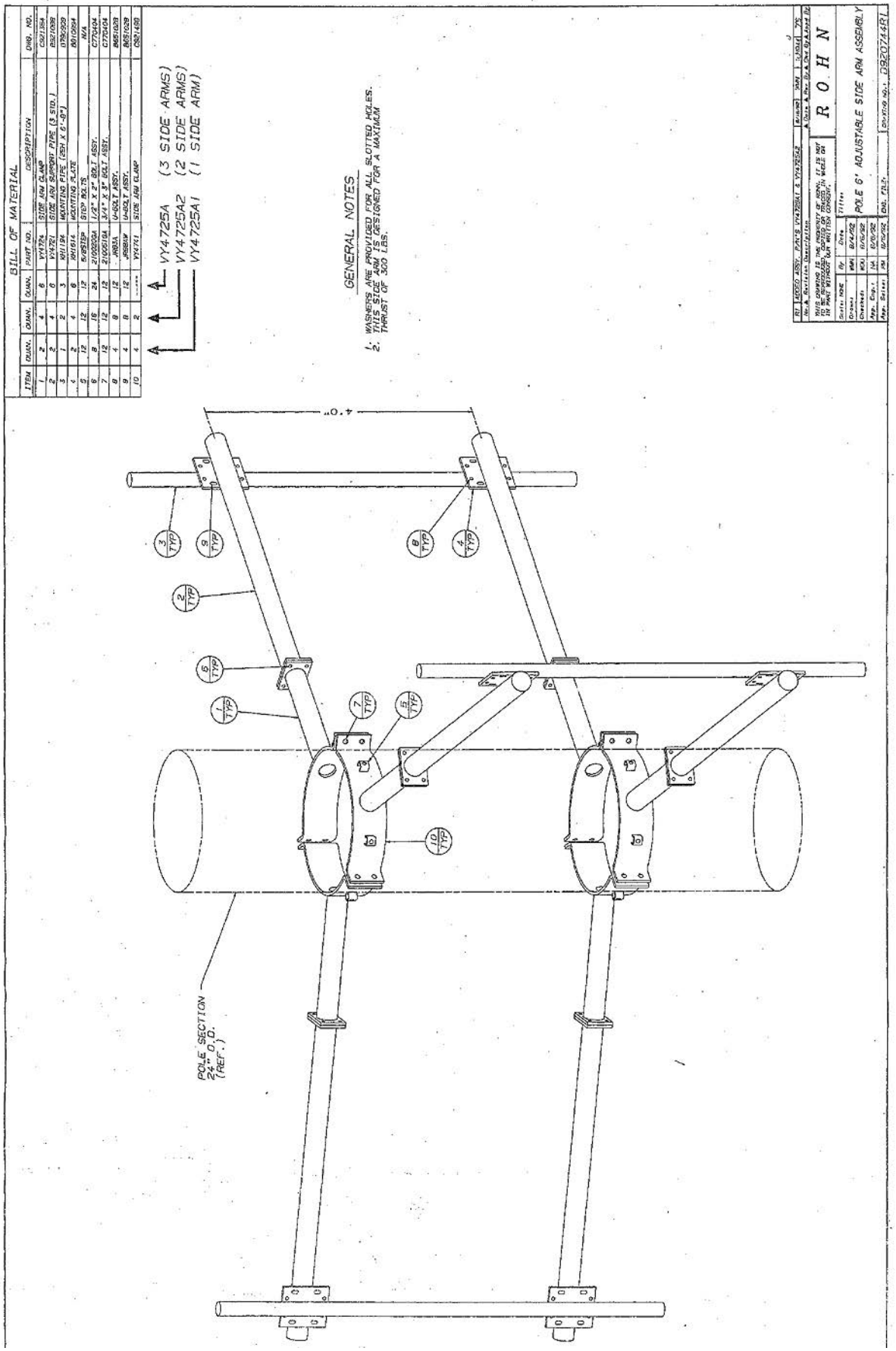
BILL OF MATERIAL
ITEM | QUAN. | QUAN. | QUAN. | PART NO. | DESCRIPTION | DWG. NO.
1 | 2 | 4 | 6 | VY4724 | SIDE ARM CLAMP | C921584
2 | 2 | 4 | 6 | VY4721 | SIDE ARM SUPPORT PIPE (3 STD.) | B921088
3 | 1 | 2 | 3 | RH1124 | MOUNTING PIPE (SCH X 6'-8") | D792929
4 | 2 | 4 | 6 | RH1614 | MOUNTING PLATE | B610984
5 | 12 | 12 | 12 | 5/8SSP | SSP BOLTS | N/A
6 | 8 | 16 | 24 | 210625QA | 1/2" X 2" BOLT ASSY. | C770404
7 | 12 | 12 | 12 | 210651QA | 3/4" X 3" BOLT ASSY. | C770404
8 | 4 | 8 | 12 | JRB3A | U-BOLT ASSY. | B651039
9 | 4 | 8 | 12 | JRSB4W | U-BOLT ASSY. | B651039
10 | 4 | 2 | ---- | VY4721 | SIDE ARM CLAMP | C921459
VY4725A (3 SIDE ARMS)
VY4725A2 (2 SIDE ARMS)
VY4725A1 (1 SIDE ARM)
GENERAL NOTES
1. WASHERS ARE PROVIDED FOR ALL SLOTTED HOLES.
2. THIS SIDE ARM IS DESIGNED FOR A MAXIMUM THRUST OF 300 LBS.
4'-0"
3 TYP
9 TYP
2 TYP
6 TYP
1 TYP
7 TYP
5 TYP
8 TYP
4 TYP
10 TYP
POLE SECTION 24" O.D. (REF.)
R O H N
POLE 6' ADJUSTABLE SIDE ARM ASSEMBLY

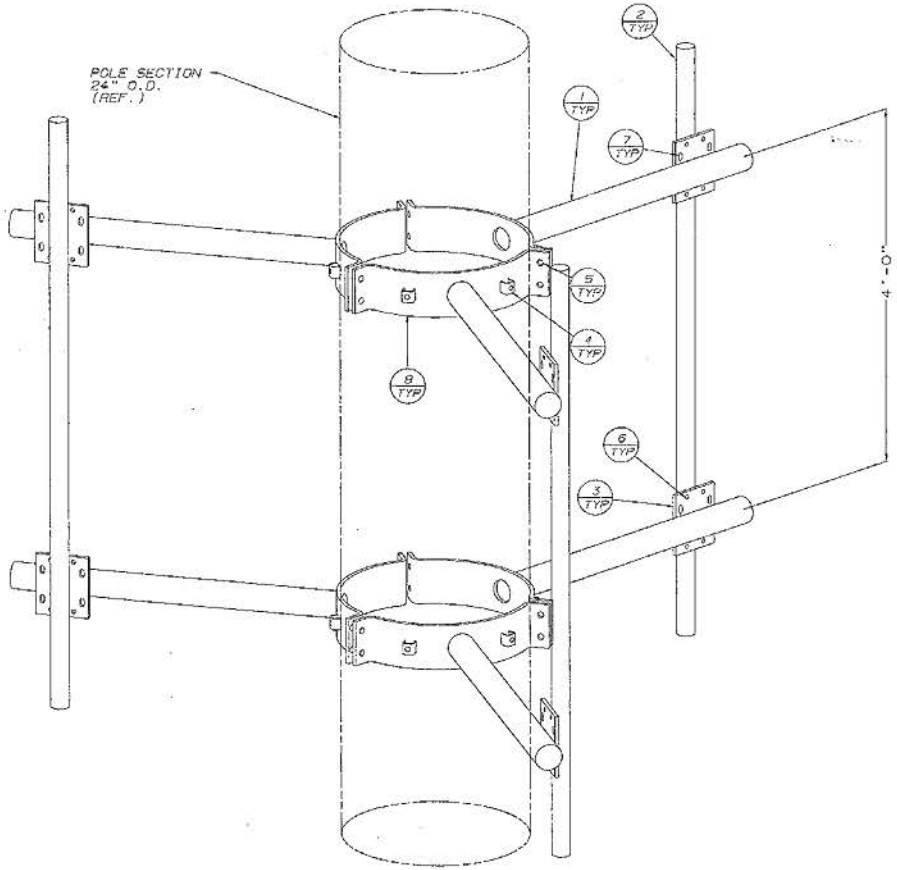

BILL OF MATERIAL

ITEM	QUAN.	QUAN.	QUAN.	PART NO.	DESCRIPTION	DWG. NO.
1	2	4	6	VY4951	SIDE ARM CLAMP	C931023
2	1	2	3	XH1194	MOUNTING PIPE (2DH X 6'-8")	B790909
3	2	4	6	XH1814	MOUNTING PLATE	B910934
4	12	12	12	S/BSTEP	STEP BOLTS	N/A
5	12	12	12	210051GA	3/4" X 3" BOLT ASSY.	C770404
6	4	8	12	JR95A	U-BOLT ASSY.	B951028
7	4	8	12	JR98AW	U-BOLT ASSY.	B951028
8	4	2	----	VY4741	SIDE ARM CLAMP	C921498

VY4953A (3 SIDE ARMS)
VY4953A2 (2 SIDE ARMS)
VY4953A1 (1 SIDE ARM)

GENERAL NOTES

1. WASHERS ARE PROVIDED FOR ALL SLOTTED HOLES.
2. THIS SIDE ARM IS DESIGNED FOR A MAXIMUM THRUST OF 300 LBS.

No.	Revision Description	Date	Rev. By	Cont By	Appr By

ROHN

Scale: NONE	By	Date	Title:
Drawn:	JCM	9-7-93	POLE 3' ADJUSTABLE SIDE ARM ASSEMBLY
Checked:		9/16/93	
App. Eng.:		9-14-93	
App. Sales:		9-21-93	END. FILE: DRAWING NO.: D930507

BILL OF MATERIAL

ITEM	QUAN. (3-PIPES)	QUAN. (2-PIPES)	QUAN. (1-PIPES)	PART NO.	DESCRIPTION	DWG. NO.
1	6	4	2	VY5055	POLE DISH MOUNT CLAMP W/ STUB	C941000
2	---	2	4	VY5033	POLE DISH MOUNT CLAMP	C940703
3	3	2	1	KH279	MOUNTING PIPE (4STD X 5' LG.)	B770160
4	----	----	----	----		
5	12	8	4	JR85A#	U-BOLT ASSY.	B651028
6	12	12	12	210051GA	3/4" X 3" BOLT ASSY.	C770404

ASSY P/N: VY5056A

ASSY P/N: VY5056A2P

ASSY P/N: VY5056A3P

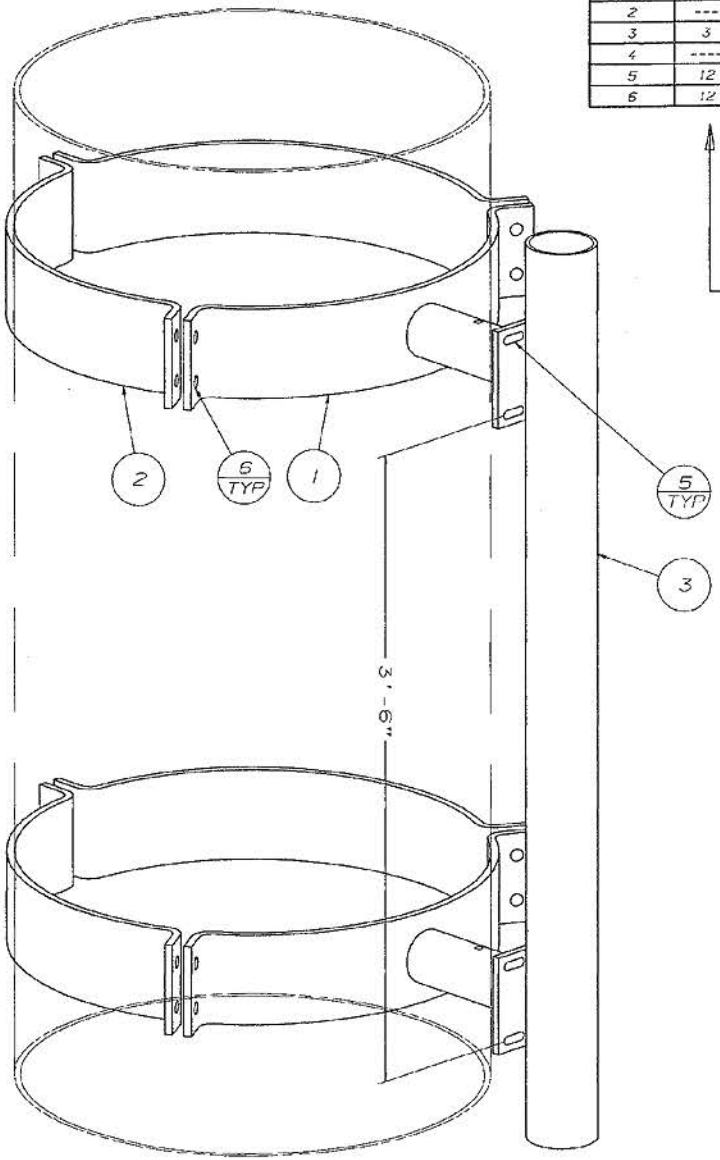

NOTE:
WASHERS ARE PROVIDED FOR ALL SLOTTED HOLES.

No.	Revision Description	Date	Rev By	Ckd By	Appd By
R2	DELETED 5/8STEP	12/15/97	WMN	SRH	TS
R1	ADDED VY5055A2P & VY5056A3P	7-19-94	JDM	WOU	TS

ROHN

Scale: NONE	By	Date
Drawn:	WMN	6/22/94
Checked:	WOU	6/22/94
App. Eng.:	TS	6/23/94
App. Sales:	PEH	6/23/94

Title: DISH MOUNT ASSY. FOR 30" DIA. POLE

ENG. FILE:

DRAWING NO.: C940997 R2

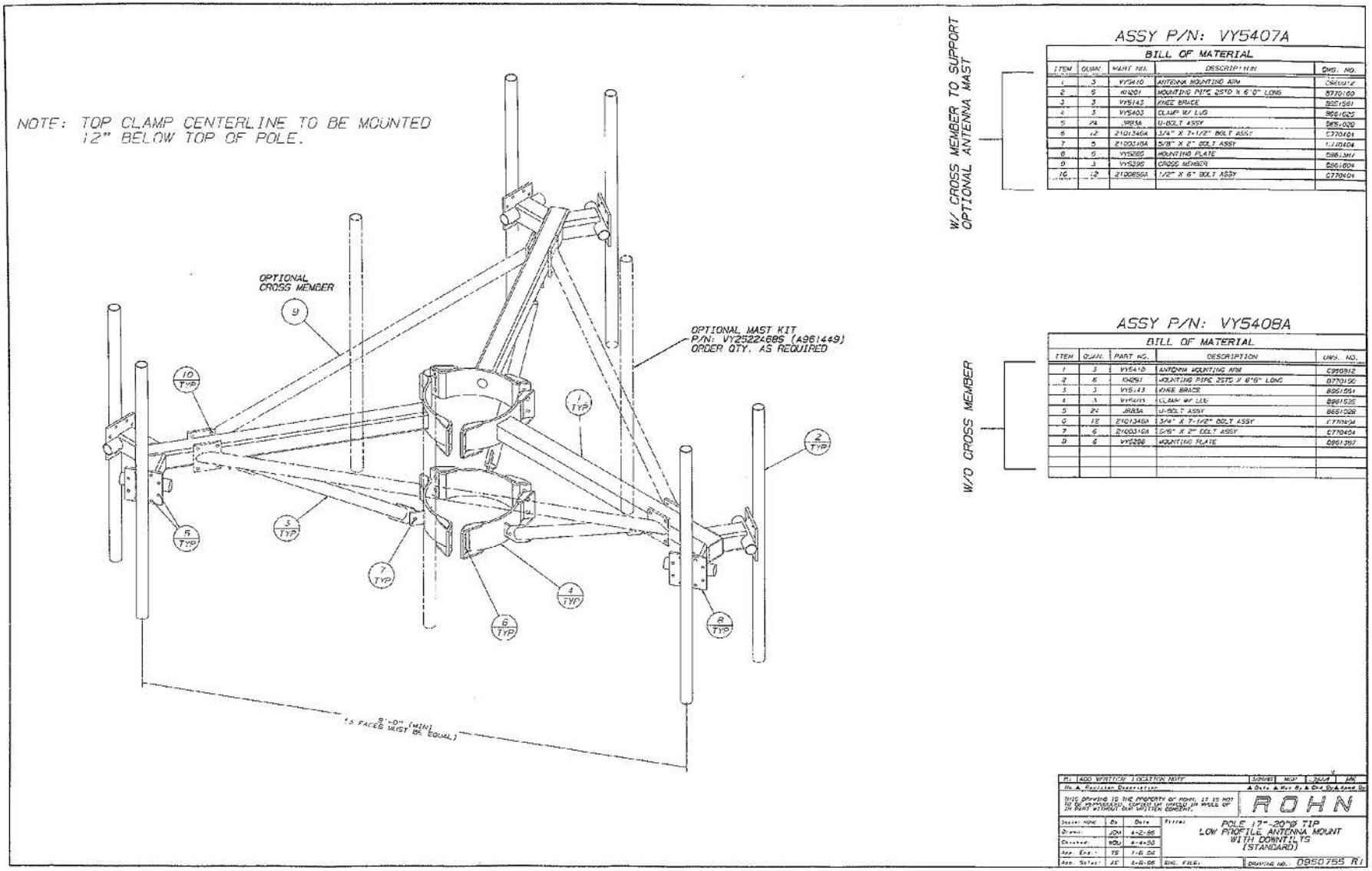

ASSY P/N: VY5407A

BILL OF MATERIAL

ITEM	QUAN.	PART NO.	DESCRIPTION	DWG. NO.
1	3	VY5410	ANTENNA MOUNTING ARM	C950912
2	6	KH201	MOUNTING PIPE 2STD X 6'0" LONG	8770160
3	3	VY5143	KNEE BRACE	8951591
4	3	VY5403	CLAMP W/ LUG	8961625
5	24	JR85A	U-BOLT ASSY	8851028
6	12	21013460A	3/4" X 7-1/2" BOLT ASSY	C770404
7	6	21003180A	5/8" X 2" BOLT ASSY	C770404
8	6	VY5285	MOUNTING PLATE	8861357
9	3	VY5395	CROSS MEMBER	8861604
10	12	21008560A	1/2" X 6" BOLT ASSY	C770404

ASSY P/N: VY5408A

BILL OF MATERIAL

ITEM	QUAN.	PART NO.	DESCRIPTION	DWG. NO.
1	3	VY5410	ANTENNA MOUNTING ARM	C950912
2	6	KH201	MOUNTING PIPE 2STD X 6'0" LONG	8770160
3	3	VY5143	KNEE BRACE	8951591
4	3	VY5403	CLAMP W/ LUG	8961625
5	24	JR85A	U-BOLT ASSY	8851028
6	12	21013460A	3/4" X 7-1/2" BOLT ASSY	C770404
7	6	21003180A	5/8" X 2" BOLT ASSY	C770404
8	6	VY5285	MOUNTING PLATE	8861357

No.	Revision Description	Date	Rev By	Chk By	Appd By
R1	ADD WRITTEN LOCATION NOTE	3/29/95	MGP	JGM	MN

ROHN

Design Name	By	Date
Drawn:	JDM	4-2-95
Checked:	WDU	4-4-95
App. Eng.:	TS	7-6-95
App. Sales:	JE	6-8-95

Title: POLE 17"-20"Ø TIP LOW PROFILE ANTENNA MOUNT WITH DOWNTILTS (STANDARD)

ENG. FILE:

DRAWING NO. 0950755 R1

GENERAL NOTES

1. WASHERS ARE PROVIDED WITH ALL SLOTTED HOLES.
2. ITEM NUMBER 6 & 7 MAY BE ARRANGED IN SUCH A MANNER TO ACCOMODATE THE ROHN-LOC SAFETY DEVICE BY SLIDING WALKWAYS FROM ONE END TO THE OTHER.
3. CHECK AND, IF REQUIRED, RETIGHTEN ALL BOLTS AFTER ANTENNA INSTALLATION AND AT EACH SCHEDULED INSPECTION THEREAFTER.

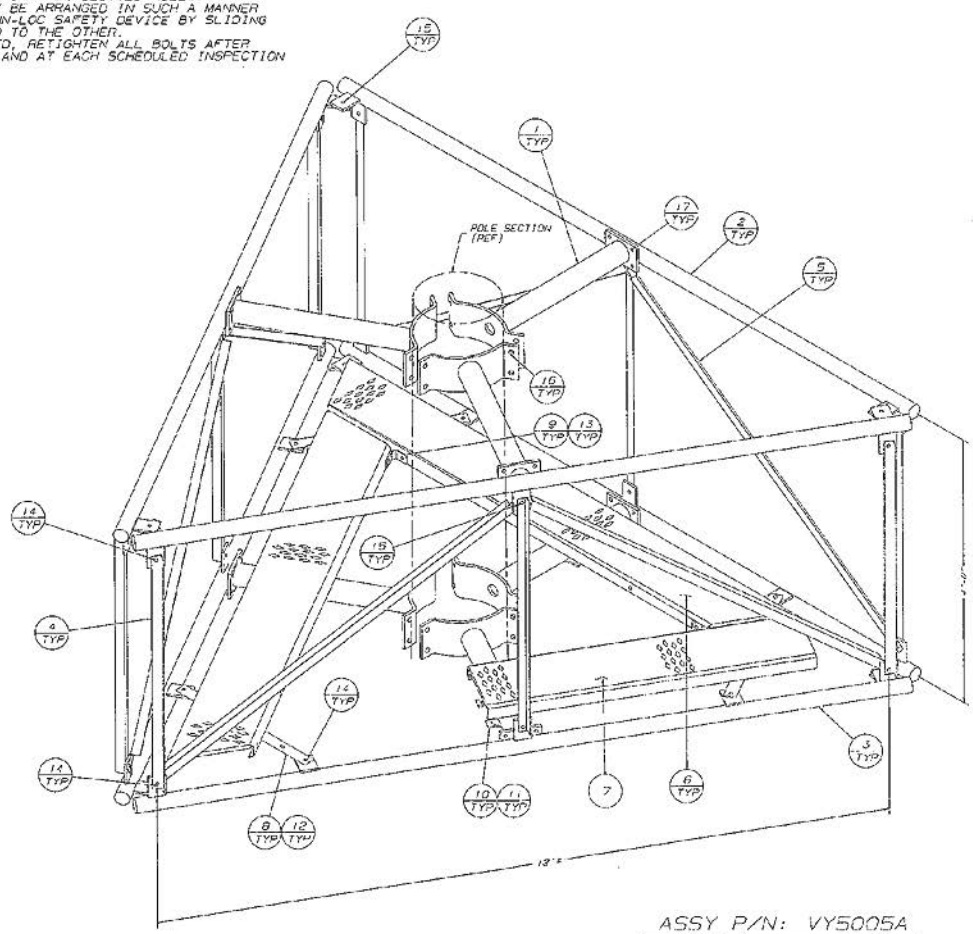

ASSY P/N: VY5005A

BILL OF MATERIAL

ITEM	QUAN.	PART NO.	DESCRIPTION	DWG. NO.
1	6	VY5007	SIDE ARM CLAMP	C940664P
2	3	VY4955	UPPER MOUNTING PIPE	8932772
3	3	VY4955	LOWER MOUNTING PIPE	8932773
4	9	VY4753	VERTICAL BRACE	8921153
5	6	VY4061	DIAG. BRACE	8932769
6	2	VX2699	WALKWAY PANEL	8932765
7	1	VX2699	WALKWAY PANEL	8932767
8	3	VY4737	WALKWAY SUPPORT ANGLE	8921157
9	2	5910	CLIP	8832820
10	6	W123	SADDLE CLAMP	SK7332528
11	12	J1G7A	J-BOLT ASSY	829100
12	8	J41JAW	J-BOLT ASSY W/WASHERS	829420
13	4	21001750A	1/2" X 1-1/4" BOLT ASSY	C770404
14	21	21001350A	1/2" X 1-1/2" BOLT ASSY	C770404
15	8	21001350A	1/2" X 1-3/4" BOLT ASSY	C770404
16	12	21013454	3/4" X 3½" BOLT ASSY	N/A
17	12	R83A	U-BOLT ASSY	8851028

No.	Item 14 qty was 18.	Item 16 was 7"	3-13-94	WRM	JBM	TS
No. & Revision Description				& Date & Rev Cy & Crd Ck & Appd By		

ROHN

Sheet Name	By	Date
Drawn:	JBM	1-28-94
Checked:	[illegible]	1-28-94
App. Eng.:	[illegible]	1-31-94
App. Sales:	[illegible]	1-28-94

Title: POLE MOUNTING FRAME W/O EXTENSION WITH WALKWAY FOR 24" POLE

ENG. FILE: DRAWING NO. C940518 R1

ROHN™ Products

MOUNTS

PRODUCTS FOR A GROWING WORLD OF TECHNOLOGY

Blank

ROHN™ Products

Universal Tower Antenna Mounts

Products for a Growing World of Technology

Leg Dish Mounts

Part Number	Description
S24HUM	Straight leg Dish Mount, 2.375 inch - 4.5 inch OD legs
S24HUMTB	Straight leg Dish Mount, 2.375 - 4.5 OD legs, with Tie Back Clips
S56HUM	Straight leg Dish Mount, 5.5 inch - 6.625 inch OD legs
S56HUMTB	Sraight leg Dish Mount, 5.5 inch - 6.625 inch OD legs, with Tie Back Clips
T24HUM	Tapered Leg Dish Mount, 2.375 inch - 4.5 inch OD legs
T24HUMTB	Tapered leg Dish Mount, 2.375 inch - 4.5 inch OD legs, with Tie Back Clips
T56HUM	Tapered Leg Dish Mount, 5.5 inch - 6.625 inch OD legs
T56HUMTB	Tapered Leg Dish Mount, 5.5 inch - 6.625 inch OD legs, with Tie Back Clips

Standard Leg Dish Mounts will fit on your designation of straight or tapered round member tower legs with diameters of 2.375″ O.D. throuhg 6.625″ O.D. Larger sizes are avilable upon request. All items are hot dip galvanized. Includes mount and all hardware nedded to attach mount to tower. Tie back clips and hardware are included where shown in description.

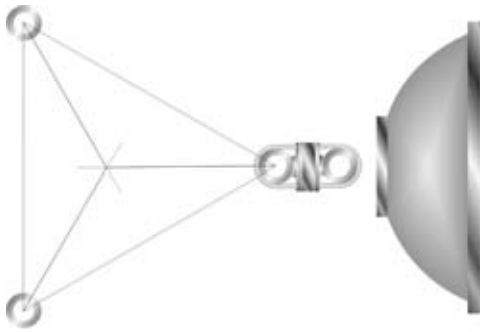

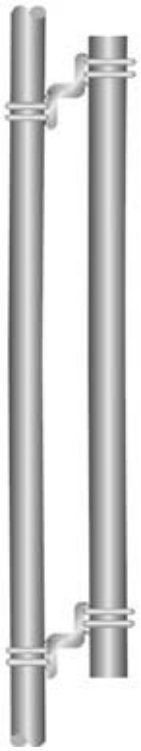

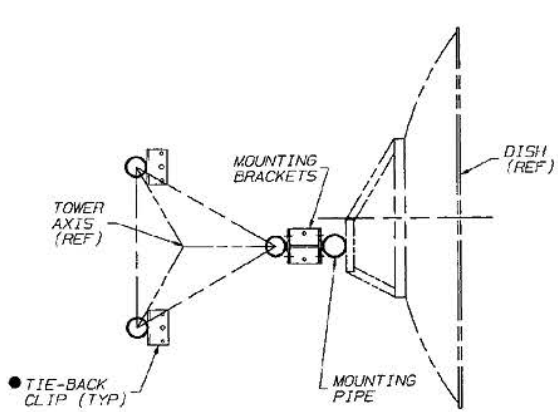

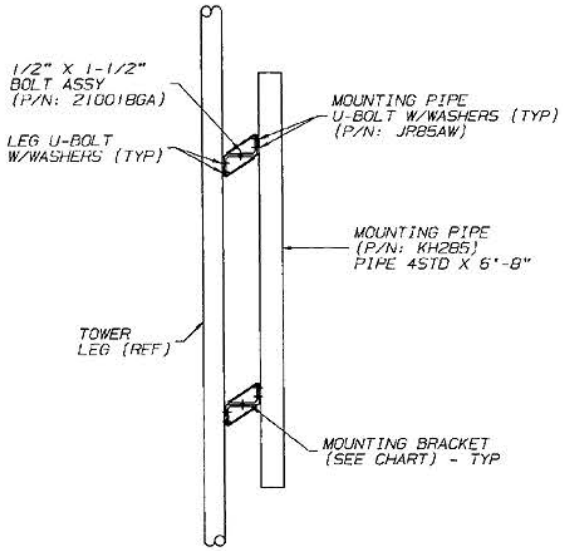

ASSY P/N	TOWER LEG SIZE (O.D.)	MOUNTING BRACKET P/N	LEG U-BOLT	NUTS, PAL NUTS & WASHER	MOUNTING PIPE	BOLT ASSY (QTY - 4)	MOUNTING PIPE U-BOLTS (QTY - 4)	TIE-BACK CLIP (IF REQUIRED)	NUTS, PAL NUTS & WASHER
S24HUM *	2.375 - 4.50	4 - VY2379	4 - JR83 4 - JR84 4 - JR88 4 - JR89 4 - JR85	8 - 250011G 8 - 230013 8 - 230011	1-KH285	210018GA	JR85AW	2-VY1653 4-JR83 4-JR84 4-JR88 4-JR89 4-JR85	8 - 250011G 8 - 230013 8 - 230011
S56HUM	5.50 - 6.625	2 - VY2379 2 - VY2380	4 - JR86 4 - JR87	8 - 250011G 8 - 230013 8 - 230011	1-KH285	210018GA	JR85AW	2-VY1654 4-JR86 4-JR87	8 - 250011G 8 - 230013 8 - 230011

● NOTE: ADD "TB" TO END OF PART NUMBER TO INCLUDE (2) TIE-BACK CLIPS.

* NOT TO BE USED ON LESS THAN 2.875" O.D. WITH 10' HP DISHES OR LARGER.

GENERAL NOTES

1. MOUNTING BRACKETS MUST BE MOUNTED AS CLOSE TO A BRACE CLIP AS POSSIBLE.
2. FOR FABRICATION DRAWING SEE:
   MOUNTING BRACKET - B810183
   U-BOLT - B651028
   MOUNTING PIPE - B770160
   TIE-BACK CLIP - B800104
3. FLAT WASHERS ARE PROVIDED WITH ALL SLOTTED HOLES.

No.	Revision Description	Date	Rev By	Ckd By	Appd By
R1	REVISED DRAWING	12-13-99	ACS		

ROHN

Scale: NONE	By	Date
Drawn:	JDM	2-18-99
Checked:	KTL	3-2-99
App. Eng.:	TS	3-9-99
Parent File:		

UNIVERSAL LEG DISH MOUNT FOR STRAIGHT TOWER SECTIONS

ENG. FILE:

DWG. NO.: C990750 REV. 1

SHEET 1 OF 1

DISH MOUNTS WITH MOUNTING PIPE 4" STD. X 5'-0" LG. & TIE-BACK CLIPS

ASSEMBLY PT. NO.	TOWER LEG PIPE SIZE	MOUNTING BRACKET PT. NO. (4-REQ'D) (EXCEPT AS NOTED)		LEG U-BOLT ASS'Y WITH WASHERS (8-REQUIRED)	MOUNTING PIPE PT. NO. (1-REQ'D)	TIE-BACK CLIP PT. NO. (2-REQ'D)	MTG. PIPE U-BOLT ASS'Y w/WASHERS (4-REQUIRED)	CONNECTION BOLT ASSEMBLY 1/2 x 1 1/2 (4-REQUIRED)
STB20UM	2"	VY1627		JR83AW	KH279	VY1653	JR85AW	210018GA
STB25UM	2 1/2"	VY1627		JR84AW	KH279	VY1653	JR85AW	210018GA
STB30UM	3"	VY1627		JR88AW	KH279	VY1653	JR85AW	210018GA
STB35UM	3 1/2"	VY1627		JR89AW	KH279	VY1653	JR85AW	210018GA
STB40UM	4"	VY1627		JR85AW	KH279	VY1653	JR85AW	210018GA
STB50UM	5"	2-VY1627	2-VY1628	JR86AW	KH279	VY1654	JR85AW	210018GA
STB60UM	6"	2-VY1627	2-VY1628	JR87AW	KH279	VY1654	JR85AW	210018GA

DISH MOUNTS WITH MOUNTING PIPE 4" STD. X 6'-8" LG. & TIE-BACK CLIPS

ASSEMBLY PT. NO.	TOWER LEG PIPE SIZE	MOUNTING BRACKET PT. NO. (4-REQ'D) (EXCEPT AS NOTED)		LEG U-BOLT ASS'Y WITH WASHERS (8-REQUIRED)	MOUNTING PIPE PT. NO. (1-REQ'D)	TIE-BACK CLIP PT. NO. (2-REQ'D)	MTG. PIPE U-BOLT ASS'Y w/WASHERS (4-REQUIRED)	CONNECTION BOLT ASSEMBLY 1/2 x 1 1/2 (4-REQUIRED)
STB20HUM	2"	VY1627		JR83AW	KH285	VY1653	JR85AW	210018GA
STB25HUM	2 1/2"	VY1627		JR84AW	KH285	VY1653	JR85AW	210018GA
STB30HUM	3"	VY1627		JR88AW	KH285	VY1653	JR85AW	210018GA
STB35HUM	3 1/2"	VY1627		JR89AW	KH285	VY1653	JR85AW	210018GA
STB40HUM	4"	VY1627		JR85AW	KH285	VY1653	JR85AW	210018GA
STB50HUM	5"	2-VY1627	2-VY1628	JR86AW	KH285	VY1654	JR85AW	210018GA
STB60HUM	6"	2-VY1627	2-VY1628	JR87AW	KH285	VY1654	JR85AW	210018GA

NOTE: FLAT WASHERS ARE PROVIDED FOR ALL SLOTTED HOLES.

GENERAL NOTES

1. MOUNTING BRACKETS MUST BE MOUNTED AS CLOSE TO A BRACE CLIP AS POSSIBLE.
2. FOR MOUNTING BRACKET FABRICATION, SEE DRAWING NUMBER B800005.
3. FOR U-BOLT FABRICATION, SEE DRAWING NUMBER B651028.
4. FOR MOUNTING PIPE FABRICATION, SEE DRAWING NUMBER B770160.
5. FOR TIE-BACK CLIP ANGLE FABRICATION, SEE DRAWING NUMBER B800104.

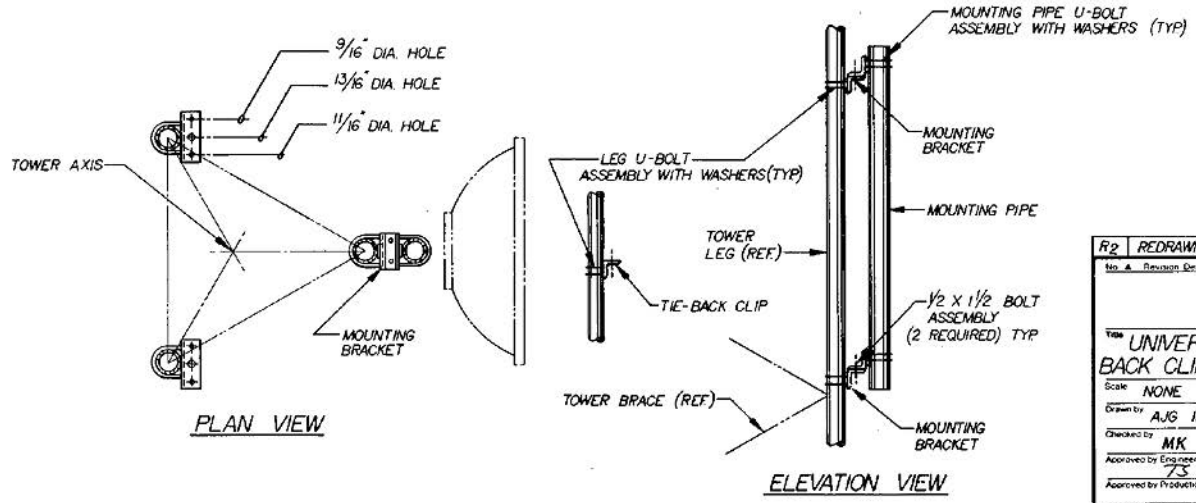

No.	Revision Description	Date	By
R2	REDRAWN	12-5-81	AJG

Unarco-Rohn
Division of Unarco Industries, Inc.

Title: UNIVERSAL LEG DISH MOUNTS & TIE-BACK CLIPS FOR STRAIGHT TOWER SECTIONS

Scale: NONE
Drawn by: AJG 12-5-81
Checked by: MK 12-14-81
Approved by Engineering: TS 12-16-81
Approved by Production:
Approved by Sales: GR 12-16-81

Unless otherwise specified, dimensions are given in inches. Tolerances: Decimals ±, Fractions ±, Angles ±. Material, Finish, Weight.

File Number:
Drawing Number: C800125 R2

DISH MOUNTS WITH MOUNTING PIPE 4" STD. X 5'-0" LG. & TIE-BACK CLIPS

ASSEMBLY PT. NO.	TOWER LEG PIPE SIZE	LOWER BRACKET PT. NO. (1-REQ'D OF EACH)		UPPER BRACKET PT. NO. (1-REQ'D OF EACH)		MOUNTING PIPE PT. NO. (1-REQ'D)	TIE-BACK CLIP PT. NO. (2-REQ'D)	MTG. PIPE U-BOLT ASS'Y w/WASHERS (4-REQUIRED)	CONNECTION BOLT ASSEMBLY 1/2 x 1 1/2 (4-REQUIRED)	LEG U-BOLT ASS'Y WITH WASHERS (8-REQUIRED)
TTB20UM	2"	VY1651	VY1651	VY1627	VY1627	KH279	VY1653	JR85AW	210018GA	JR83AW
TTB25UM	2 1/2"	VY1651	VY1651	VY1627	VY1627	KH279	VY1653	JR85AW	210018GA	JR84AW
TTB30UM	3"	VY1651	VY1651	VY1627	VY1627	KH279	VY1653	JR85AW	210018GA	JR88AW
TTB35UM	3 1/2"	VY1651	VY1651	VY1627	VY1627	KH279	VY1653	JR85AW	210018GA	JR89AW
TTB40UM	4"	VY1651	VY1651	VY1627	VY1627	KH279	VY1653	JR85AW	210018GA	JR85AW
TTB50UM	5"	VY1651	VY1652	VY1627	VY1628	KH279	VY1654	JR85AW	210018GA	JR86AW
TTB60UM	6"	VY1651	VY1652	VY1627	VY1628	KH279	VY1654	JR85AW	210018GA	JR87AW

DISH MOUNTS WITH MOUNTING PIPE 4" STD. X 6'-8" LG. & TIE-BACK CLIPS

ASSEMBLY PT. NO.	TOWER LEG PIPE SIZE	LOWER BRACKET PT. NO. (1-REQ'D OF EACH)		UPPER BRACKET PT. NO. (1-REQ'D OF EACH)		MOUNTING PIPE PT. NO. (1-REQ'D)	TIE-BACK CLIP PT. NO. (2-REQ'D)	MTG. PIPE U-BOLT ASS'Y w/WASHERS (4-REQUIRED)	CONNECTION BOLT ASSEMBLY 1/2 x 1 1/2 (4-REQUIRED)	LEG U-BOLT ASS'Y WITH WASHERS (8-REQUIRED)
TTB20HUM	2"	VY1651	VY1651	VY1627	VY1627	KH285	VY1653	JR85AW	210018GA	JR83AW
TTB25HUM	2 1/2"	VY1651	VY1651	VY1627	VY1627	KH285	VY1653	JR85AW	210018GA	JR84AW
TTB30HUM	3"	VY1651	VY1651	VY1627	VY1627	KH285	VY1653	JR85AW	210018GA	JR88AW
TTB35HUM	3 1/2"	VY1651	VY1651	VY1627	VY1627	KH285	VY1653	JR85AW	210018GA	JR89AW
TTB40HUM	4"	VY1651	VY1651	VY1627	VY1627	KH285	VY1653	JR85AW	210018GA	JR85AW
TTB50HUM	5"	VY1651	VY1652	VY1627	VY1628	KH285	VY1654	JR85AW	210018GA	JR86AW
TTB60HUM	6"	VY1651	VY1652	VY1627	VY1628	KH285	VY1654	JR85AW	210018GA	JR87AW

NOTE: FLAT WASHERS ARE PROVIDED FOR ALL SLOTTED HOLES.

GENERAL NOTES

1. MOUNTING BRACKETS MUST BE MOUNTED AS CLOSE TO A BRACE CLIP AS POSSIBLE.
2. FOR MOUNTING BRACKET FABRICATION, SEE DRAWING NUMBERS B800005 AND B800102.
3. FOR U-BOLT FABRICATION, SEE DRAWING NUMBER B651028.
4. FOR MOUNTING PIPE FABRICATION, SEE DRAWING NUMBER B770160.
5. FOR TIE-BACK CLIP ANGLE FABRICATION, SEE DRAWING NUMBER B800104.

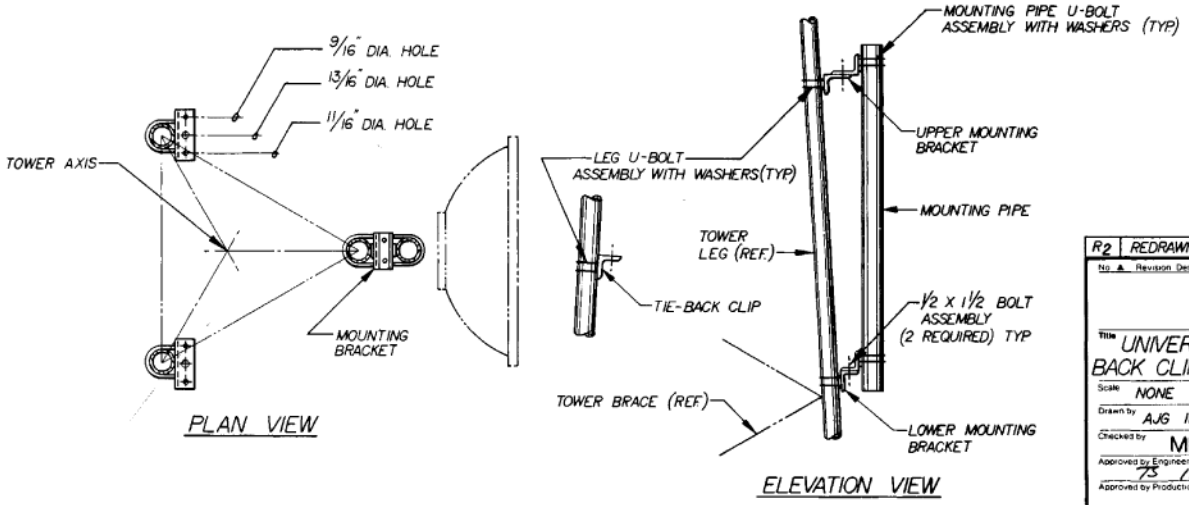

No.	Revision Description	Date	By
R2	REDRAWN	12-5-81	AJG

Unarco-Rohn
Division of Unarco Industries, Inc

Title: UNIVERSAL LEG DISH MOUNTS & TIE-BACK CLIPS FOR TAPERED TOWER SECTIONS

Scale: NONE
Drawn by: AJG 12-5-81
Checked by: MK 12-14-81
Approved by Engineering: TS 12-16-81
Approved by Production:
Approved by Sales: GR 12-16-81

Unless otherwise specified dimensions are given in inches
Tolerances: Decimals · Fractions · Angles ·
Material · Finish · Weight

File Number:
Drawing Number: C800124 R2

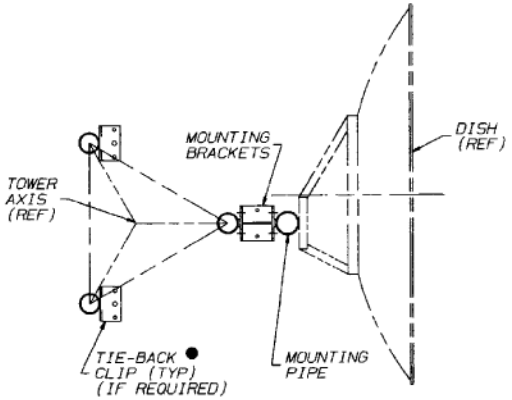

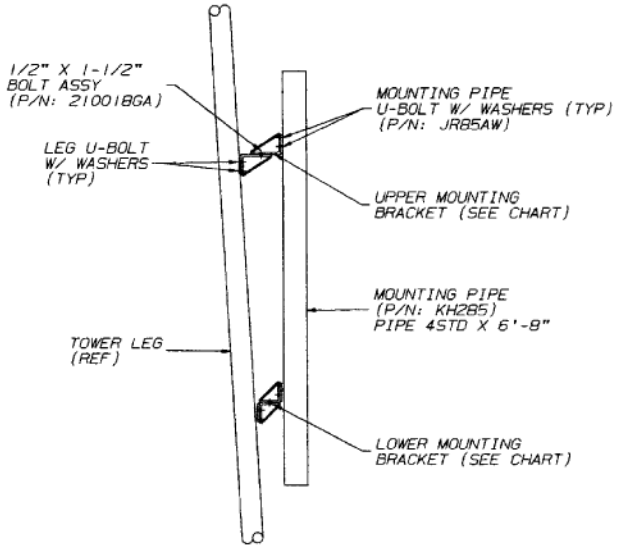

ASSY P/N	TOWER LEG SIZE (O.D.)	LOWER MOUNTING BRACKET P/N	UPPPER MOUNTING BRACKET P/N	LEG U-BOLT	NUTS, PAL NUTS & WASHERS	MOUNTING PIPE	BOLT ASSY (QTY-4)	MOUNTING PIPE U-BOLTS (QTY-4)	TIE-BACK CLIP (IF REQUIRED)	NUTS, PAL NUTS & WASHERS
T24HUM ✚	2.375 - 4.50	2 - VY2404	2 - VY2379	4 - JR83 4 - JR84 4 - JR88 4 - JR89 4 - JR85	8 - 250011G 8 - 230013 8 - 230011	1 - KH285	210018GA	JR85AW	2-VY1653 4-JR83 4-JR84 4-JR88 4-JR89 4-JR85	8-250011G 8-230013 8-230011
T56HUM	5.50 - 6.625	1 - VY2404 1 - VY2405	1 - VY2379 1 - VY2380	4 - JR86 4 - JR87	8 - 250011G 8 - 230013 8 - 230011	1 - KH285	210018GA	JR85AW	2-VY1654 4-JR86 4-JR87	8-250011G 8-230013 8-230011

● NOTE: ADD "TB" TO END OF PART NUMBER TO INCLUDE (2) TIE-BACK CLIPS.

✚ **NOT TO BE USED ON LESS THAN 2.875" O.D. WITH 10' HP DISHES OR LARGER.**

GENERAL NOTES

1. MOUNTING BRACKETS MUST BE MOUNTED AS CLOSE TO A BRACE CLIP AS POSSIBLE.
2. FOR FABRICATION DRAWING SEE:
   MOUNTING BRACKET - B810211 & B810183
   U-BOLT - B651028
   MOUNTING PIPE - B770160
   TIE-BACK CLIP - B800104
3. FLAT WASHERS ARE PROVIDED WITH ALL SLOTTED HOLES.

No. ▲ Revision Description	▲ Date	▲ Rev. By	▲ Ckd By	▲ Appd By

ROHN

Scale: NONE	By	Date
Drawn:	JDM	2-18-99
Checked:		3/2/99
App. Eng.:	TS	3/2/99
Parent File:		

UNIVERSAL LEG DISH MOUNT FOR TAPERED TOWER SECTIONS

ENG. FILE:

DWG. NO.: C990752

SHEET 1 OF 1

REV.

DISH MOUNTS W/ MOUNTING PIPE 4" STD. x 10'-0" LG. W/ TIE-BACK CLIPS

ASSY. P/N	TOWER LEG PIPE SIZE	MOUNTING BRKT. P/N (6-REQ'D.) (EXCEPT AS NOTED.)		TIE-BACK CLIP P/N (2-REQ'D.)	MOUNTING PIPE P/N (1-REQ'D.)	LEG U-BOLT ASS'Y W/ WASHERS (10-REQ'D.)	MTG. PIPE U-BOLT ASS'Y W/ WASHERS (6-REQ'D.)	CONNECTION BOLT ASS'Y 1/2 x 1 1/2 (6 REQ'D)
ST820LUM	2 STD. or 2 X-STR.	VY1627		VY1653	KH291	JR83AW	JR85AW	210018GA
ST825LUM	2 1/2 STD. or 2 1/2 X-STR.	VY1627		VY1653	KH291	JR84AW	JR85AW	210018GA
ST830LUM	3 STD. or 3 X-STR	VY1627		VY1653	KH291	JR88AW	JR85AW	210018GA
ST835LUM	3 1/2 STD. or 3 1/2 X-STR	VY1627		VY1653	KH291	JR89AW	JR85AW	210018GA
ST840LUM	4 STD. or 4 X-STR	VY1627		VY1653	KH291	JR85AW	JR85AW	210018GA
ST850LUM	5 STD. or 5 X-STR	3-VY1627	3-VY1628	VY1654	KH291	JR86AW	JR85AW	210018GA
ST860LUM	6 STD. or 6 X-STR	3-VY1627	3-VY1628	VY1654	KH291	JR87AW	JR85AW	210018GA

DISH MOUNTS W/ MOUNTING PIPE 4" STD. x 10'-0" LG.

ASSY. P/N	TOWER LEG PIPE SIZE	MOUNTING BRKT. P/N (6-REQ'D.) (EXCEPT AS NOTED)		CONNECTION BOLT ASS'Y. 1/2 x 1 1/2 (6-REQ'D.)	MOUNTING PIPE P/N (1-REQ'D)	LEG U-BOLT ASS'Y W/ WASHERS (6-REQ'D.)	MTG. PIPE U-BOLT ASS'Y W/ WASHERS (6-REQ'D.)
S20LUM	2 STD. or 2 X-STR.	VY1627		210018GA	KH291	JR83AW	JR85AW
S25LUM	2 1/2 STD. or 2 1/2 X-STR.	VY1627		210018GA	KH291	JR84AW	JR85AW
S30LUM	3 STD. or 3 X-STR.	VY1627		210018GA	KH291	JR88AW	JR85AW
S35LUM	3 1/2 STD. or 3 1/2 X-STR.	VY1627		210018GA	KH291	JR89AW	JR85AW
S40LUM	4 STD. or 4 X-STR.	VY1627		210018GA	KH291	JR85AW	JR85AW
S50LUM	5 STD. or 5 X-STR.	3-VY1627	3-VY1628	210018GA	KH291	JR86AW	JR85AW
S60LUM	6 STD. or 6 X-STR.	3-VY1627	3-VY1628	210018GA	KH291	JR87AW	JR85AW

NOTE: FLAT WASHERS PROVIDED FOR ALL SLOTTED HOLES.

GENERAL NOTES

1. MOUNTING BRACKETS MUST BE MOUNTED AS CLOSE TO BRACE CLIP AS POSSIBLE.
2. FOR MOUNTING BRACKET FABRICATION SEE DWG. NO. B800005.
3. FOR U-BOLT FABRICATION SEE DWG. NO. B651028 R20.
4. FOR MOUNTING PIPE FABRICATION SEE DWG. NO. B770160 R2.
5. FOR TIE-BACK CLIP ANGLE FABRICATION SEE DWG. NO. B800104 R1.

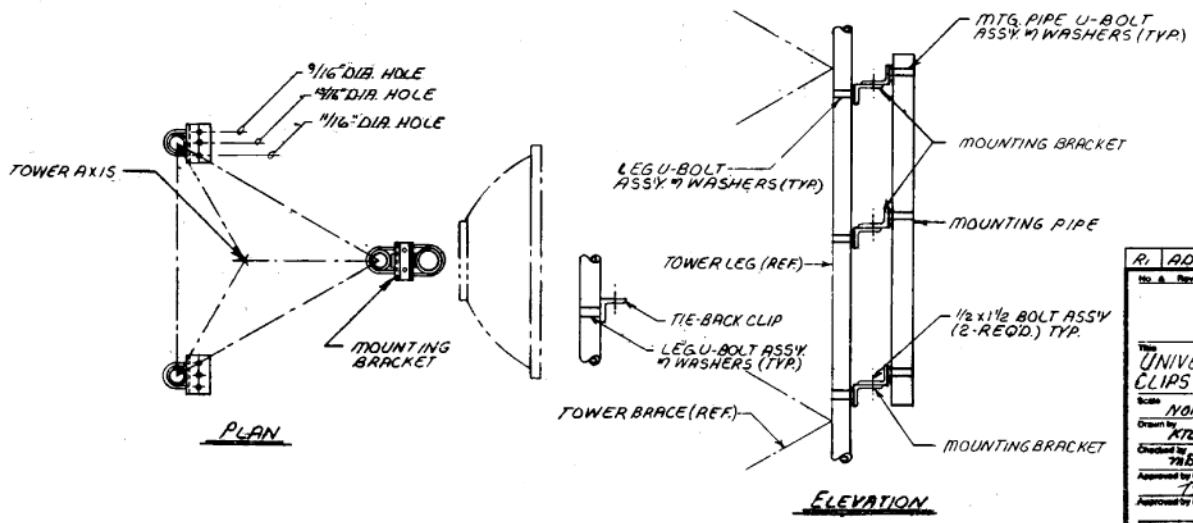

No.	Revision Description	Date	Appr.
R1	ADDED HOLES IN TIE-BACK CLIP	9-17-80	KTL

Unarco-Rohn
Division of Unarco Industries, Inc.

Title: UNIVERSAL LEG DISH MOUNTS & TIE-BACK CLIPS FOR STRAIGHT TOWER SECTIONS

Scale: NONE
Drawn by: KTL 2-19-80
Checked by: 3-12-80
Approved by Engineering: TC 3-12-80
Approved by Production:
Approved by Sales: GR 3-12-80

C800126R1

Antenna Mounts

Part Number	Description
LMF1 5254A6	3 Sector Frame Mount, 15 feet, 2.875 inch - 4.5 inch OD legs, 6 mounting pipes
LMF15254A9	3 Sector Frame Mount, 15 feet, 2.875 inch - 4.5 inch OD legs, 12 mounting pipes
LMF12254A6	3 Sector Frame Mount, 12 feet, 2.875 inch - 4.5 inch OD legs, 6 mounting pipes
LMF12254A9	3 Sector Frame Mount, 12 feet, 2.875 inch - 4.5 inch OD legs 9 mounting pipes
LMF12254A12	3 Sector Frame Mount, 12 feet, 2.875 inch - 4.5 inch OD legs, 12 mounting pipes
LMF20254A6	3 Sector Frame Mount, 20 feet, 2.875 inch - 4.5 inch OD legs, 6 mounting pipes
LMF20254A12	3 Sector Frame Mount, 20 feet, 2.875 inch - 4.5 inch OD legs, 12 mounting pipes

Sector Frame Mount

This mount will fit straight or tapered tower sections with round member legs 2.875 inch O.D. through 4.5 inch O.D. and face widths of up to 14 ft., making it ideal for co-location applicaion. The frame facce width size from 12 to 20 feet wil fit most requirements. Mounting pipes are 8 feet long. All compenents are hot dip galvanized after fabrication. Each part number includes mounts for three sectors, mounting pipes, and all hardware required to attach mount to tower. Illustration below shows one sector only.

Mounts for additiona leg diameters available upon request.

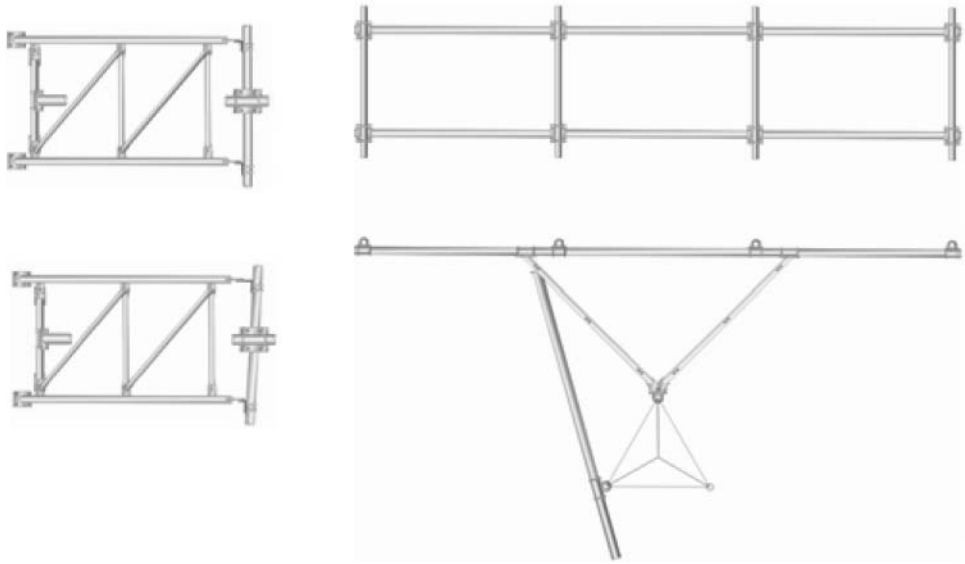

Side Arms - 3′ and 6′

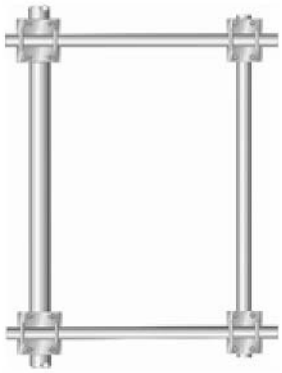

Part Number	Description
SA324A	Three Foot Side Arm, 2.375 inch - 4.5 inch OD legs
SA356A	Three Foot Side Arm, 5.5 inch - 6.63 inch OD legs
SA624A	Six Foot Side Arm, 2.375 inch - 4.5 inch OD legs
SA656A	Six Foot Side Arm, 5.5 inch - 6.63 inch OD legs

ROHN offers both Three and Six Foot side arm assemblies for straight or tapered tower sections. Kits are the same for either straight or tapered sections and may be oredered for legs 2.375″ OD throuth 5.5″ OD or 5.5″ throuhg 6.63″ OD. Side arms to fit larger leg diameters are availabel upon request. These side arms are also available with either one or two tie back assemblies at additional cost. All items are hot dip galvanized.

BMR Side Arms

ROHN offers both Three and Six Foot side arm assemblies for straight or tapered tower sections. Kits are the same for either straight or tapered sections and may be oredered for legs 2.375″ OD throuth 5.5″ OD or 5.5″ throuhg 6.63″ OD. Side arms to fit larger leg diameters are availabel upon request. These side arms are also available with either one or two tie back assemblies at additional cost. All items are hot dip galvanized.

For further information and pricing on BMR Side Arms, please call.

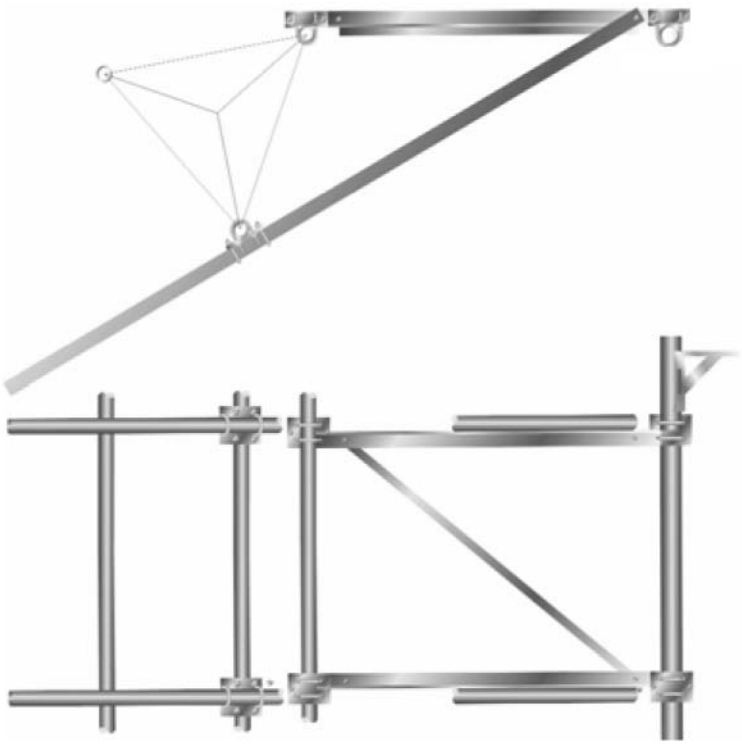

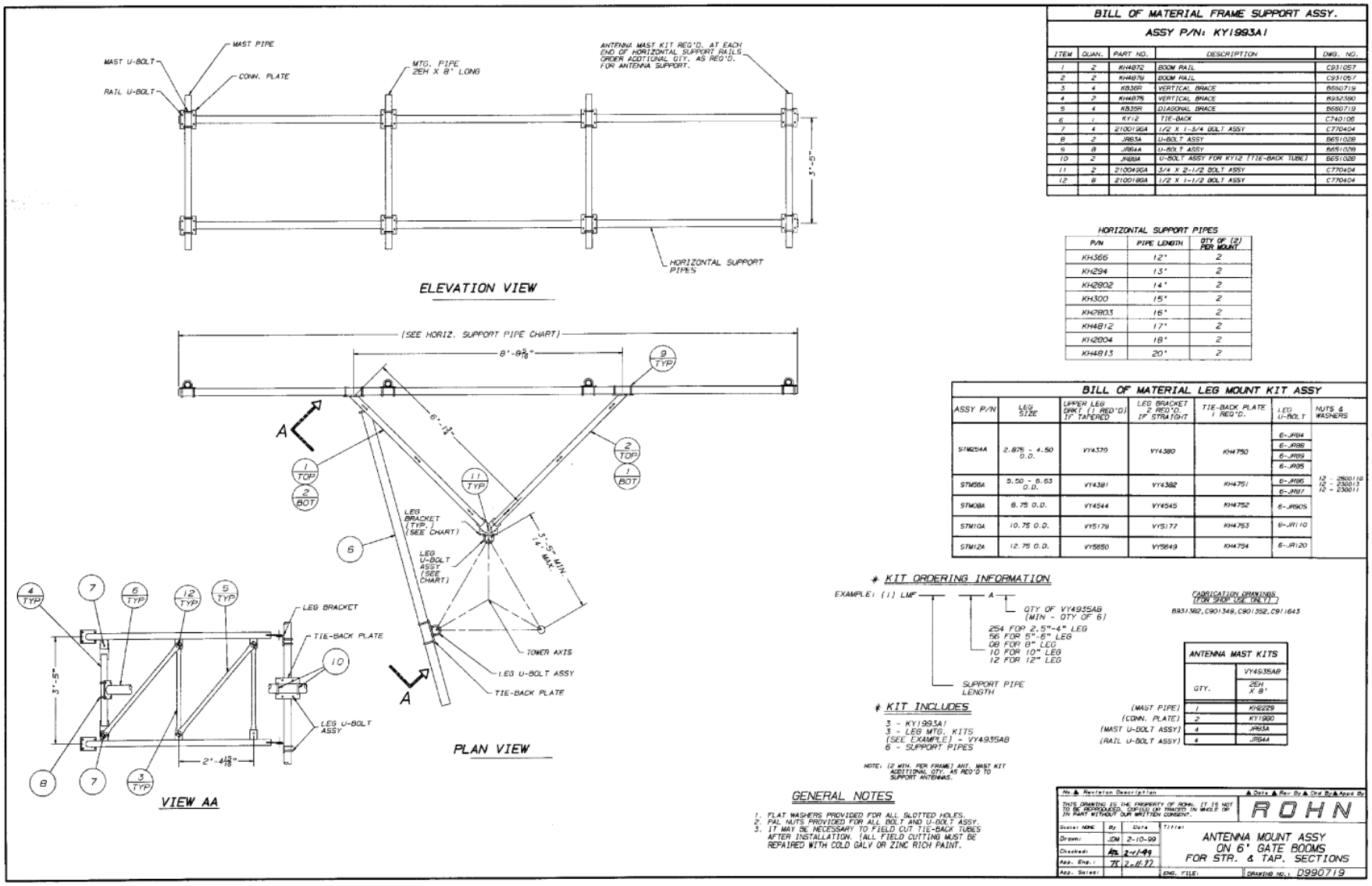

BILL OF MATERIAL FRAME SUPPORT ASSY.

ASSY P/N: KY1993A1

ITEM	QUAN.	PART NO.	DESCRIPTION	DWG. NO.
1	2	KH4872	BOOM RAIL	C931057
2	2	KH4879	BOOM RAIL	C931057
3	4	KB36R	VERTICAL BRACE	B660719
4	2	KH4875	VERTICAL BRACE	B932380
5	4	KB35R	DIAGONAL BRACE	B660719
6	1	KY12	TIE-BACK	C740106
7	4	210019GA	1/2 X 1-3/4 BOLT ASSY	C770404
8	2	JR83A	U-BOLT ASSY	B651028
9	8	JR84A	U-BOLT ASSY	B651028
10	2	JR88A	U-BOLT ASSY FOR KY12 (TIE-BACK TUBE)	B651028
11	2	210049GA	3/4 X 2-1/2 BOLT ASSY	C770404
12	8	210018GA	1/2 X 1-1/2 BOLT ASSY	C770404

HORIZONTAL SUPPORT PIPES

P/N	PIPE LENGTH	QTY OF (2) PER MOUNT
KH365	12'	2
KH294	13'	2
KH2902	14'	2
KH300	15'	2
KH2903	16'	2
KH4812	17'	2
KH2004	18'	2
KH4813	20'	2

BILL OF MATERIAL LEG MOUNT KIT ASSY

ASSY P/N	LEG SIZE	UPPER LEG BRKT (1 REQ'D) IF TAPERED	LEG BRACKET 2 REQ'D. IF STRAIGHT	TIE-BACK PLATE 1 REQ'D.	LEG U-BOLT	NUTS & WASHERS
STM254A	2.875 - 4.50 O.D.	VY4379	VY4380	KH4750	6-JR84 6-JR98 6-JR99 6-JR95	12 - 250118 12 - 250113 12 - 250111
STM56A	5.50 - 6.63 O.D.	VY4381	VY4382	KH4751	6-JR96 6-JR97	
STM08A	8.75 O.D.	VY4544	VY4545	KH4752	6-JR905	
STM10A	10.75 O.D.	VY5179	VY5177	KH4753	6-JR110	
STM12A	12.75 O.D.	VY5650	VY5649	KH4754	6-JR120	

* KIT ORDERING INFORMATION

EXAMPLE: (1) LMF — A

- QTY OF VY4935AB (MIN - QTY OF 6)
  - 254 FOR 2.5"-4" LEG
  - 56 FOR 5"-6" LEG
  - 08 FOR 8" LEG
  - 10 FOR 10" LEG
  - 12 FOR 12" LEG
- SUPPORT PIPE LENGTH

* KIT INCLUDES

3 - KY1993A1
3 - LEG MTG. KITS (SEE EXAMPLE) - VY4935AB
6 - SUPPORT PIPES

NOTE: (2 MIN. PER FRAME) ANT. MAST KIT ADDITIONAL QTY. AS REQ'D TO SUPPORT ANTENNAS.

FABRICATION DRAWINGS (FOR SHOP USE ONLY)

B931382, C901349, C901352, C911643

ANTENNA MAST KITS	
GTY.	VY4935AB 2EH X 8'
(MAST PIPE) 1	KH2229
(CONN. PLATE) 2	KY1990
(MAST U-BOLT ASSY) 4	JR83A
(RAIL U-BOLT ASSY) 4	JR84A

GENERAL NOTES

1. FLAT WASHERS PROVIDED FOR ALL SLOTTED HOLES.
2. PAL NUTS PROVIDED FOR ALL BOLT AND U-BOLT ASSY.
3. IT MAY BE NECESSARY TO FIELD CUT TIE-BACK TUBES AFTER INSTALLATION. (ALL FIELD CUTTING MUST BE REPAIRED WITH COLD GALV OR ZINC RICH PAINT.

No.	Revision Description	Date	Rev. By	Ord. By	Appd. By

ROHN

Scale: NONE	By	Date
Drawn:	JDM	2-10-99
Checked:	[illegible]	2-11-99
App. Eng.:	TK	2-16-99
App. Sales:		

Title: ANTENNA MOUNT ASSY ON 6' GATE BOOMS FOR STR. & TAP. SECTIONS

ENG. FILE: DRAWING NO.: D990719

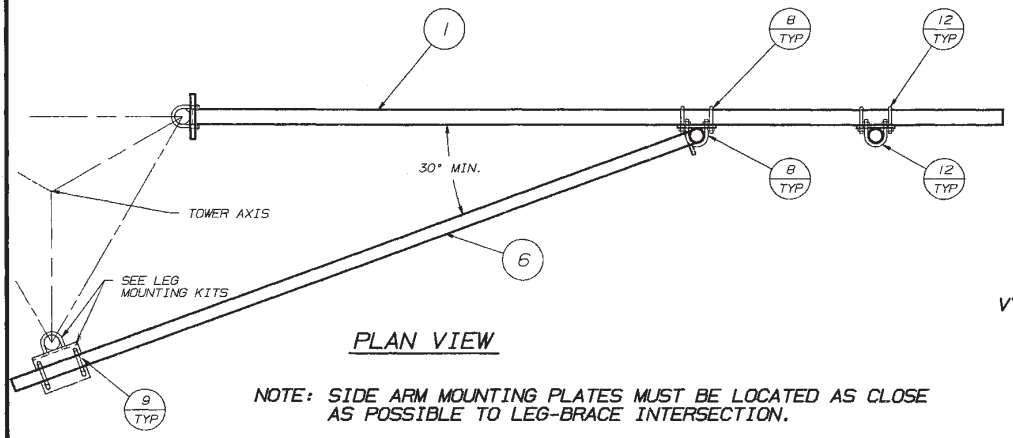

PLAN VIEW

NOTE: SIDE ARM MOUNTING PLATES MUST BE LOCATED AS CLOSE AS POSSIBLE TO LEG-BRACE INTERSECTION.

VY4301A			BOOM BILL OF MATERIAL		
QUAN.	ITEM	QUAN.	PART NO.	DESCRIPTION	DWG. NO.
---	1	---	REF	BOOM RAIL (SEE STR.LEG MOUNTING KITS)	(SEE BELOW)
5	2	5	KB36R	BOOM VERTICAL BRACE	B660719
4	3	4	KB35R	BOOM DIAGONAL BRACE	B660719
0	4	2	KY14	CONNECTION PLATE	C740106
0	5	1	KH275	CONNECTION PIPE 2STD X 5'-0" LG.	B770160
0	6	1	KY12	TIE-BACK TUBE	C740106
10	7	10	2100188A	1/2" X 1 1/2" BOLT ASSY.	C770404
0	8	10	JR83A	U-BOLT ASSY.	B651028
0	9	2	JR88AW	U-BOLT ASSY. W/WASHERS	B651028

VY4301ALTB

REFERENCE DRAWINGS
(FOR SHOP USE ONLY)
TIE-BACK ANGLES - B880971

** VY2522A			ANTENNA MAST KITS	
ITEM	QUAN.	PART NO.	DESCRIPTION	DWG. NO.
10	1	KH275	MOUNTING PIPE 2STD X 5'-0" LG.	B770160
11	2	KY14	CONNECTION PLATE	C740106
12	8	JR83A	U-BOLT ASSY.	B651028

** VY2522AB REPLACES P/N KH275 WITH P/N KH2229 - 2EH PIPE X 8'-0" LG.

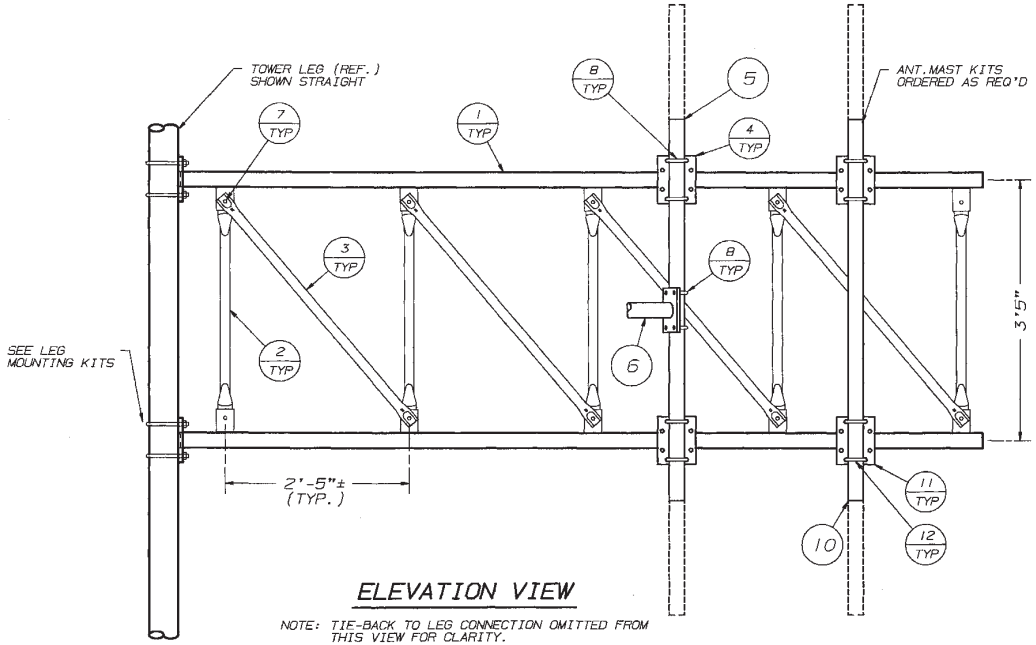

ELEVATION VIEW

NOTE: TIE-BACK TO LEG CONNECTION OMITTED FROM THIS VIEW FOR CLARITY.

STRAIGHT LEG MOUNTING KITS					
ASSEMBLY NUMBER	LEG SIZE	BOOM RAIL (2-REQ'D)	DRAWING NUMBERS	U-BOLT ASSEMBLY	TIE-BACK ANGLE
VY4302A	2"	KY1625	B891316	(6) JR83AW	KY1504
VY4303A	2 1/2"	KY1625	B891316	(6) JR84AW	KY1505
VY4304A	3"	KY1625	B891316	(6) JR88AW	KY1506
VY4305A	3 1/2"	KY1625	B891316	(6) JR89AW	KY1507
VY4306A	4"	KY1625	B891316	(6) JR85AW	KY1508
VY4307A	5"	KY1626	B891317	(6) JR86AW	KY1509
VY4308A	6"	KY1626	B891317	(6) JR87AW	KY1510

ORDERING INFO

ORDER (1) 10' GATE BOOM ASSY. VY4301A OR VY4301ALTB.
ORDER (1) LEG MOUNTING KIT (SEE CHART FOR P/N REQUIRED.
ORDER ANTENNA MAST KIT AS REQUIRED.

GENERAL NOTES

1. ALL BOOM VERTICAL AND DIAGONAL BRACES ARE STD. "80" TOWER BRACES.
2. ONE TIE-BACK SHOWN - TWO MAY BE REQUIRED FOR SPECIAL LOADING CONDITIONS.
3. FLAT WASHERS ARE PROVIDED FOR ALL SLOTTED HOLES.

No.	Revision Description	Date	Rev By	Ckd By	Appd By
R2	ADDED 30° MIN. & REVISED B.O.M.	12/7/90	WEB	[illegible]	TS
R1	ADDED NOTE	7/6/90	KTL	WDU	TS

ROHN

Scale: NONE	By	Date
Drawn:	RKB	7-25-89
Checked:	KTL	7/27/89
App. Eng.:	TS	7/28/89
App. Sales:	SAK	7/28/89

Title: 10' GATE BOOM ASSEMBLY (STR..) (MTG. KITS 2" THRU 6" LEGS)

ENG. FILE:

DRAWING NO.: C891338R2

NOTE: TIE-BACK CONNECTION ANGLES MUST BE LOCATED AS CLOSE TO ANTENNA MAST AS POSSIBLE.

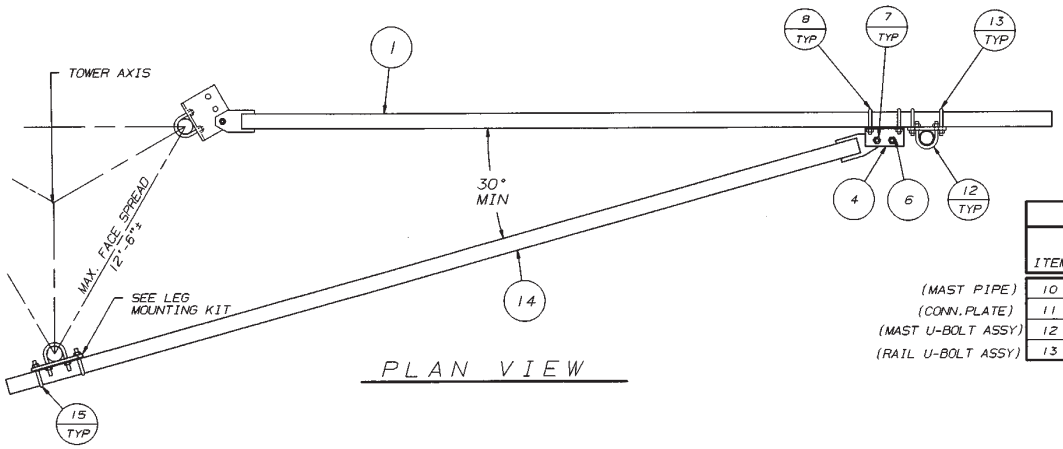

PLAN VIEW

ASSY P/N KY1955A			BOOM BILL OF MATERIAL	
ITEM	QUAN.	PART NO.	DESCRIPTION	DWG. NO.
1	2	KY1651	BOOM RAIL 2STD X 10'	B901400
2	5	KB36R	BOOM VERTICAL BRACE	B660719
3	4	KB35R	BOOM DIAGONAL BRACE	B660719
4	4	KY1841	CONNECTION ANGLE	B911713
5	10	210018GA	1/2" X 1-1/2" BOLT ASSEMBLY	C770404
6	2	KH390	RINGFILL	B770314
7	4	210031GA	5/8" X 2" BOLT ASSEMBLY	C770404
8	4	JR83A	U-BOLT ASSEMBLY	B651028
9	2	210047GA	3/4"X2" BOLT ASSEMBLY	C770404

			ANTENNA MAST KITS									
	ITEM	QTY.	VY2522A 2STD X 5'	VY2522AB 2EH X 8'	VY4781A 2.5STD X 5'	VY4781AB 2.5EH X 8'	VY4782A 3STD X 5'	VY4782AB 3EH X 8'	VY4783A 3.5STD X 5'	VY4783AB 3.5EH X 8'	VY4784A 4STD X 5'	VY4784AB 4EH X 8'
(MAST PIPE)	10	1	KH275	KH2229	KH276	KH2987	KH277	KH4719	KH278	KH3713	KH279	KH1977
(CONN. PLATE)	11	2	KY14	KY14	KH1614	KH1614	KH1614	KH1614	KH1614	KH1614	KH1614	KH1614
(MAST U-BOLT ASSY)	12	4	JR83A	JR83A	JR84AW	JR84AW	JR88AW	JR88AW	JR89AW	JR89AW	JR85AW	JR85AW
(RAIL U-BOLT ASSY)	13	4	JR83A	JR83A	JR83A	JR83A	JR83A	JR83A	JR83A	JR83A	JR83A	JR83A

			TIE-BACK KITS			
	ITEM	QTY.	VY4785A 2STD X 12'	VY4786A 2-1/2STDX15'	VY4787A 3STD X 20'	DWG. NO.
(T.B. PIPE)	14	2	WY7678	KY1845	KY1956	*SEE NOTE
(U-BOLT ASSY)	15	4	JR83AW	JR84AW	JR88AW	B651028

NOTE: SIDE ARM MOUNTING PLATES MUST BE LOCATED AS CLOSE AS POSSIBLE TO LEG-BRACE INTERSECTION.

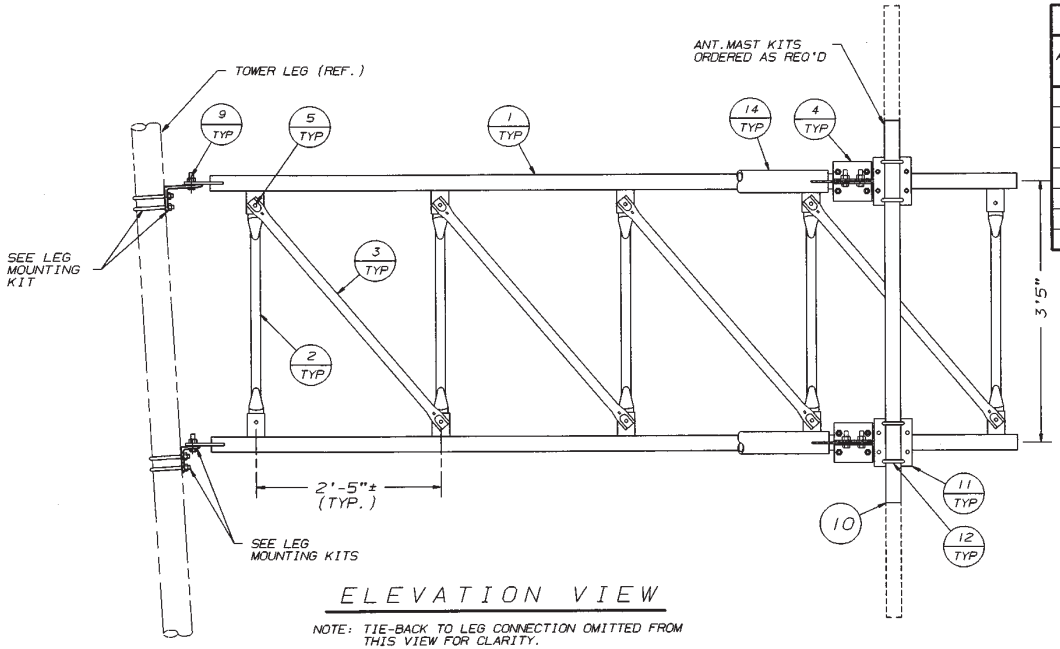

ELEVATION VIEW

NOTE: TIE-BACK TO LEG CONNECTION OMITTED FROM THIS VIEW FOR CLARITY.

TAPERED LEG MOUNTING KITS						
ASSEMBLY NUMBER	LEG SIZE	UPPER ANGLE MOUNT	LOWER ANGLE MOUNT	DRAWING NUMBERS	U-BOLT ASSEMBLY 8-REQ'D	TIE-BACK MTG PL. 2-REQ'D
KY1957A	2"	VY4379	VY4380	C901349	JR83AW	KH4750
KY1958A	2 1/2"	VY4379	VY4380	C901349	JR84AW	KH4750
KY1959A	3"	VY4379	VY4380	C901349	JR88AW	KH4750
KY1960A	3 1/2"	VY4379	VY4380	C901349	JR89AW	KH4750
KY1961A	4"	VY4379	VY4380	C901349	JR85AW	KH4750
KY1962A	5"	VY4381	VY4382	C901352	JR86AW	KH4751
KY1963A	6"	VY4381	VY4382	C901352	JR87AW	KH4751
KY1964A	8"	VY4544	VY4545	C911643	JR90SAW	KH4752

ORDERING INFO

ORDER (1) 10' GATE BOOM ASSY. KY1955A
ORDER (1) LEG MOUNTING KIT (SEE CHART FOR P/N REQUIRED.
ORDER ( ) ANTENNA MAST KIT AS REQUIRED.
ORDER (1) TIE-BACK KIT AS REQUIRED. (2-TIE BACKS PER KIT)

GENERAL NOTES

1. ALL BOOM VERTICAL AND DIAGONAL BRACES ARE STD. "80" TOWER BRACES.
2. FLAT WASHERS ARE PROVIDED FOR ALL SLOTTED HOLES.

REFERENCE DRAWINGS
(FOR SHOP USE ONLY)

* TIE-BACK PIPES WY7678 (B931383);KY1845 (B911712; KY1956 (B931437)
ANTENNA CONNECTION PLATE KH1614 (B810894) KY14 (C740106)

No. ▲ Revision Description	▲ Date	▲ Rev By	▲ Ckd By	▲ Appd By

ROHN

Scale: NONE	By	Date
Drawn:	RKB	12-29-92
Checked:	WDu	3-12-93
App. Eng.:	TI	3-12-'93
App. Sales:		

Title: 10' GATE BOOM ASSEMBLY (TAPERED) (MTG. KITS 2" THRU 8" LEGS)

ENG. FILE:

DRAWING NO.: C930719

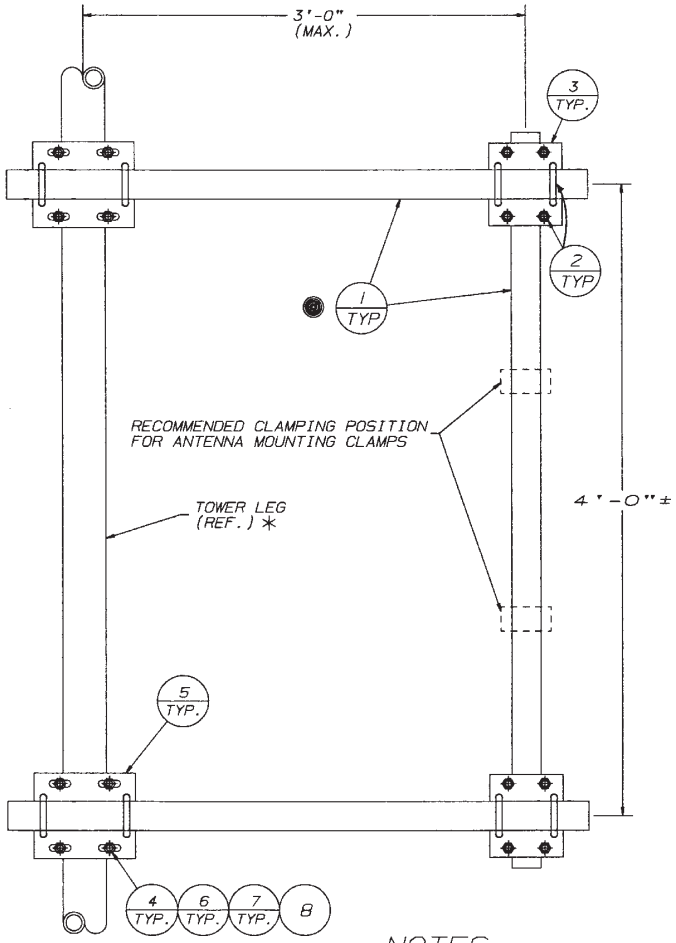

BILL OF MATERIAL

ITEM	QUAN.	PART NO.	DESCRIPTION	DWG. NO.
1	3	KH275	MOUNTING PIPE 2STD X 5' LG.	B770160
2	12	JR83A	U-BOLT ASSY	B651028
3	2	KY14	CONNECTION PLATE	C740106
4	4	SEE CHART	U-BOLT	B651028
5	2	SEE CHART	MOUNTING PLATE	B810894
6	8	250011G	9/16" WASHER FOR U-BOLT	N/A
7	8	230013	1/2" NUT FOR U-BOLT	N/A
8	8	230011	1/2" PAL NUTS	N/A

ASSY P/N	PIPE LEG (O.D.)	MTG PLATE (QTY-2)	U-BOLT (QTY-4 EA.)
SA324A	2.375-4.5	KH1614	JR83 JR84 JR89 JR85 JR88
SA356A	5.56-6.63	KH1615	JR86 JR87
SA38A	8.75	KH1716	JR90S
SA310A	10.75	KH1960	JR110
SA312A	12.75	KH1961	JR120

NOTES

1. WASHERS ARE PROVIDED FOR ALL SLOTTED HOLES.
2. THIS SIDE ARM IS DESIGNED FOR AN ALLOWABLE ANTENNA LOADING OF 300# THRUST.
3. SIDE ARM MOUNTING PLATES MUST BE LOCATED AS CLOSE AS POSSIBLE TO LEG-BRACE INTERSECTION.
4. SIDE ARM ORIENTATION MAY VERY FROM TOWER AXIS.
5. ✳ CHECK TOWER ASSY DWG. FOR LEG SIZE TO DETERMINE ASSY NO. REQUIRED.
6. IF 8' (P/N:KH2229) MOUNTING PIPE IS NEEDED INSTEAD OF 5' (P/N:KH275) MOUNTING PIPE IN ITEM #1, ADD AN 8 TO THE END OF THE PART NUMBER. (EXAMPLE: SA324A8)
7. NUMBERS SHOWN IN BALLOONS DENOTES ITEM NUMBER IN BILL OF MATERIAL.

No. ▲	Revision Description	▲ Date	▲ Rev By	▲ Ckd By	▲ Appd By

ROHN

Scale: NONE	By	Date
Drawn:	JDM	3-19-99
Checked:	KR	3/30/99
App. Eng.:	TB	3/31/99
App. Sales:		

Title: 3' SIDE ARM ASSEMBLY FOR STRAIGHT OR TAPERED TOWER SECTIONS

DRAWING NO.: C990849

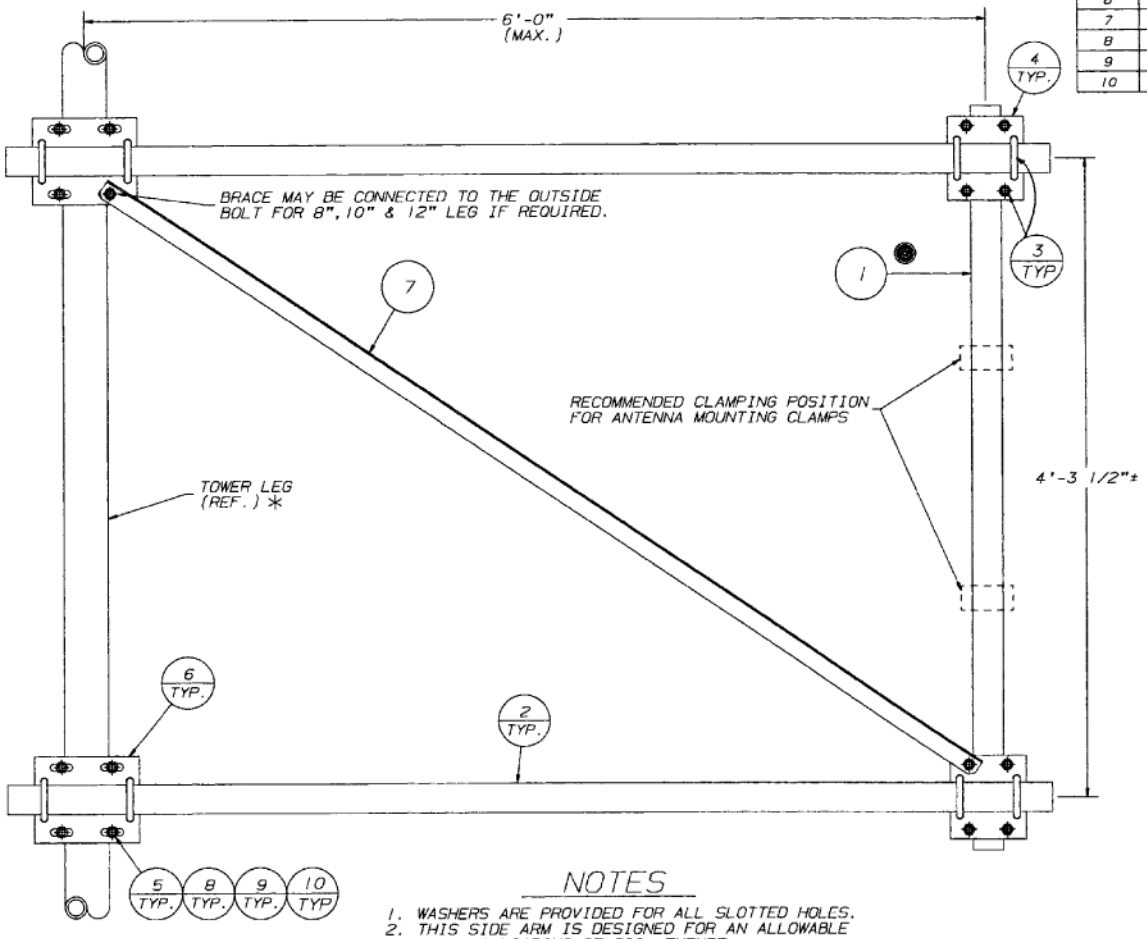

BILL OF MATERIAL

ITEM	QUAN.	PART NO.	DESCRIPTION	DWG. NO.
1	1	KH275	MOUNTING PIPE 2STD X 5' LG.	B770160
2	2	KH1304	MOUNTING PIPE 2STD X 8' LG.	B770160
3	12	JR83A	U-BOLT ASSY	B651028
4	2	KY14	CONNECTION PLATE	C740106
5	4	SEE CHART	U-BOLT	B651028
6	2	SEE CHART	MOUNTING PLATE	B810894
7	1	KH1616	BRACE L1-1/2 X 1/8	B810895
8	8	250011G	9/16" WASHER FOR U-BOLT	N/A
9	8	230013	1/2" NUT FOR U-BOLT	N/A
10	8	230011	1/2" PAL NUT	N/A

ASSY P/N	PIPE LEG (O.D.)	MTG PLATE (QTY-2)	U-BOLT (QTY-4 EA.)
SA624A	2.375-4.5	KH1614	JR83 JR84 JR89 JR88 JR85
SA656A	5.56-6.63	KH1615	JR86 JR87
SA68A	8.75	KH1716	JR90S
SA610A	10.75	KH1960	JR110
SA612A	12.75	KH1961	JR120

NOTES

1. WASHERS ARE PROVIDED FOR ALL SLOTTED HOLES.
2. THIS SIDE ARM IS DESIGNED FOR AN ALLOWABLE ANTENNA LOADING OF 300# THRUST.
3. SIDE ARM MOUNTING PLATES MUST BE LOCATED AS CLOSE AS POSSIBLE TO LEG-BRACE INTERSECTION.
4. SIDE ARM ORIENTATION MAY VERY FROM TOWER AXIS.
5. ✳ CHECK TOWER ASSY DWG. FOR LEG SIZE TO DETERMINE ASSY NO. REQUIRED.
6. ● IF 8' (P/N:KH2229) MOUNTING PIPES ARE NEEDED INSTEAD OF 5' (P/N:KH275) MOUNTING PIPES IN ITEM #1, ADD AN 8 TO THE END OF THE PART NUMBER. (EXAMPLE: SA624A8)
7. NUMBERS SHOWN IN BALLOONS DENOTES ITEM NUMBER IN BILL OF MATERIAL.

No. ▲	Revision Description	▲ Date	▲ Rev. By	▲ Ckd. By	▲ Appd. By

ROHN

Scale: NONE	By	Date
Drawn:	JDM	3-29-99
Checked:	KJZ	3/30/99
App. Eng.:	TJS	3/31/99
App. Sales:		

Title: 6' SIDE ARM ASSEMBLY FOR STRAIGHT OR TAPERED TOWER SECTIONS

DRAWING NO.: C990868

NOTE: SIDE ARM MOUNTING PLATES MUST BE LOCATED AS CLOSE AS POSSIBLE TO LEG-BRACE INTERSECTION.

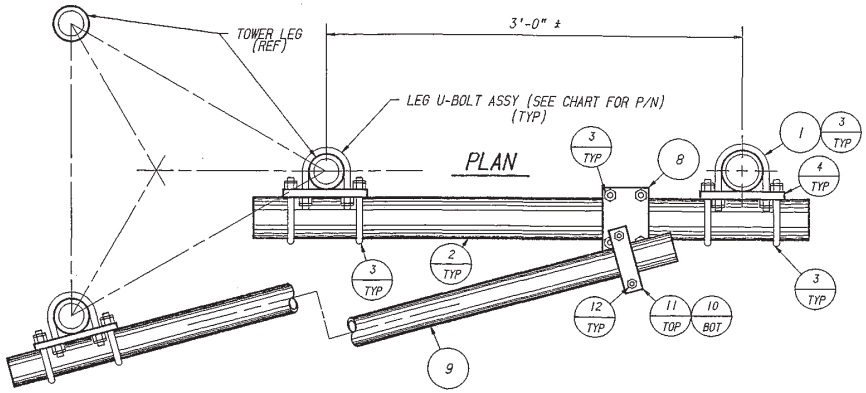

SIDE ARM ASSEMBLY BILL OF MATERIAL				
ITEM	QTY	PART NO.	DESCRIPTION	DWG NO.
1	1	KH275	MOUNTING PIPE 2STD X 5'-0" LG.	B770160
2	2	KH1279	MOUNTING PIPE 2STD X 4'-0" LG.	B770160
3	16	JR83A	U-BOLT ASSY	B651028
4	2	KY14	CONNECTION PLATE	C740106
5	1	230015	1/2" ANCO NUT	N/A
6	3	KH1614	MOUNTING PLATE	B810894
7	6	SEE CHART	LEG U-BOLT ASSY W/WASHERS	B651028
8	1	KY1159	TIE-BACK CONNECTION PLATE	B641241
9	1	KH293	SWAY BRACE 2STD X 13'-4" LG.	B770160
10	1	KY1073	SADDLE CLAMP (LOWER)	B640924
11	1	D114	SADDLE CLAMP (UPPER)	B770214
12	2	2100136A	3/8 X 4 BOLT ASSY	C770404

NOTE: WASHERS ARE PROVIDED FOR ALL SLOTTED HOLES

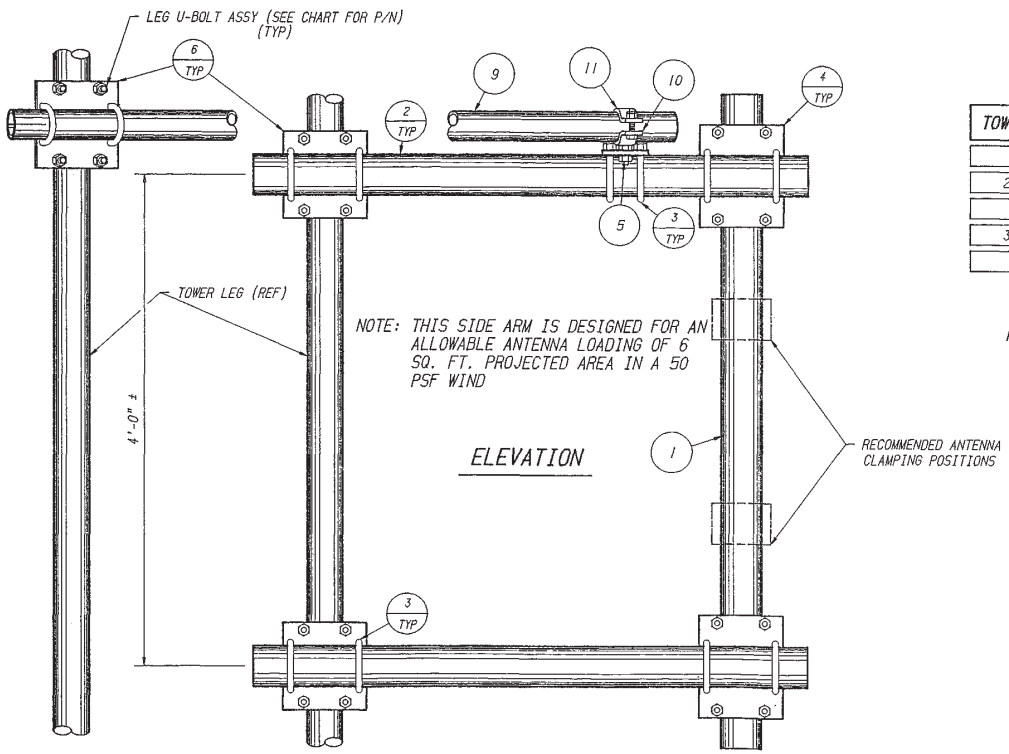

NOTE: THIS SIDE ARM IS DESIGNED FOR AN ALLOWABLE ANTENNA LOADING OF 6 SQ. FT. PROJECTED AREA IN A 50 PSF WIND

TOWER LEG SIZE	SIDE ARM ASSY P/N	LEG U-BOLT ASSY P/N
2" PIPE	SA32PL1TB	JR83AW
2 1/2" PIPE	SA325PL1TB	JR84AW
3" PIPE	SA33PL1TB	JR88AW
3 1/2" PIPE	SA335PL1TB	JR89AW
4" PIPE	SA34PL1TB	JR85AW

NOTE: THIS TIE-BACK ARRANGEMENT IS TO BE USED ONLY AT LOCATIONS ON TOWERS WITH A FACE SPREAD OF 8'-6"± OR LESS

No.	Revision Description	Date	By
R2	REDRAWN & ADDED NOTE	2-6-90	FHT/JCUTS
R1	KH293 WAS KY293 IN B.O.M.	12/19/86	RKB

ROHN®

Title: 3' SIDE ARM ASSY W/1 TIE-BACK FOR STRAIGHT OR TAPERED TOWER SECTIONS

Scale: NONE

Unless otherwise specified, dimensions are given in inches. Tolerances: Decimals ±, Fractions ±, Angles ±

Drawn by RKB 11/4/86 Date

Checked by GPW 12/4/86 Date

Material | Finish | Weight

Approved by Engineering 12/5/86 Date

Approved by Production Date

Approved by Sales JC 12/5/86 Date

File Number

Drawing Number: C861003 R2

BRUNING 41503

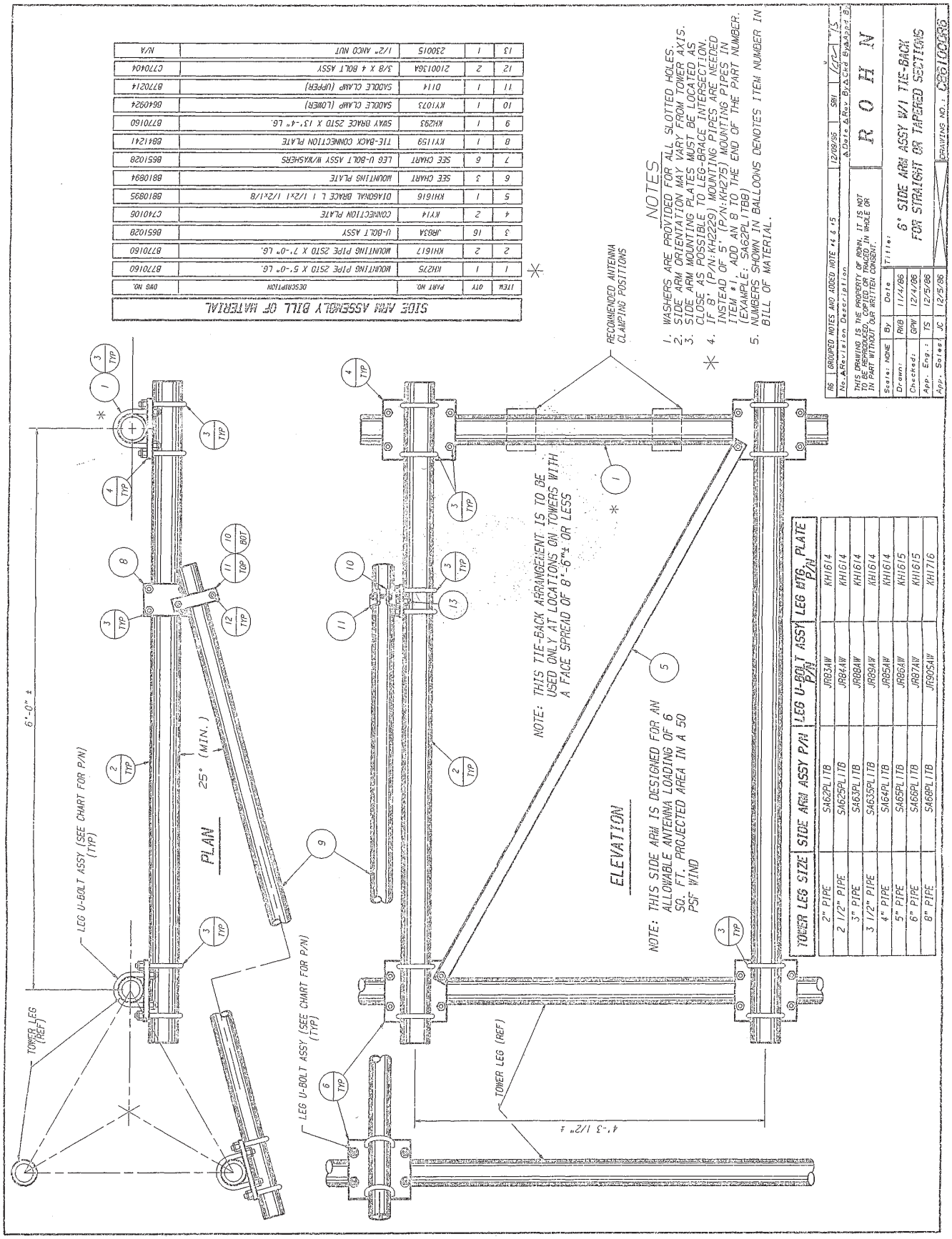
PLAN
25° (MIN.)
6'-0" ±
LEG U-BOLT ASSY (SEE CHART FOR P/N) (TYP)
TOWER LEG (REF)
ELEVATION
NOTE: THIS TIE-BACK ARRANGEMENT IS TO BE USED ONLY AT LOCATIONS ON TOWERS WITH A FACE SPREAD OF 8'-6"± OR LESS
NOTE: THIS SIDE ARM IS DESIGNED FOR AN ALLOWABLE ANTENNA LOADING OF 6 SQ. FT. PROJECTED AREA IN A 50 PSF WIND
RECOMMENDED ANTENNA CLAMPING POSITIONS
4'-3 1/2" ±
NOTES
1. WASHERS ARE PROVIDED FOR ALL SLOTTED HOLES.
2. SIDE ARM ORIENTATION MAY VARY FROM TOWER AXIS.
3. SIDE ARM MOUNTING PLATES MUST BE LOCATED AS CLOSE AS POSSIBLE TO LEG-BRACE INTERSECTION.
4. IF 8' (P/N:KH2229) MOUNTING PIPES ARE NEEDED INSTEAD OF 5' (P/N:KH275) MOUNTING PIPES IN ITEM #1, ADD AN 8 TO THE END OF THE PART NUMBER. (EXAMPLE: SA62PL1TBB)
5. NUMBERS SHOWN IN BALLOONS DENOTES ITEM NUMBER IN BILL OF MATERIAL.
SIDE ARM ASSEMBLY BILL OF MATERIAL
ITEM | QTY | PART NO. | DESCRIPTION | DWG NO.
1 | 1 | KH275 | MOUNTING PIPE 2STD X 5'-0" LG. | B770160
2 | 2 | KH1617 | MOUNTING PIPE 2STD X 7'-0" LG. | B770160
3 | 16 | JR83A | U-BOLT ASSY | B651028
4 | 2 | KY14 | CONNECTION PLATE | C740106
5 | 1 | KH1616 | DIAGONAL BRACE L 1 1/2x1 1/2x1/8 | B881095
6 | 3 | SEE CHART | MOUNTING PLATE | B810894
7 | 6 | SEE CHART | LEG U-BOLT ASSY W/WASHERS | B651028
8 | 1 | KY1159 | TIE-BACK CONNECTION PLATE | B841241
9 | 1 | KH293 | SWAY BRACE 2STD X 13'-4" LG. | B770160
10 | 1 | KY1075 | SADDLE CLAMP (LOWER) | B640924
11 | 1 | D114 | SADDLE CLAMP (UPPER) | B770214
12 | 2 | 2100136A | 5/8 X 4 BOLT ASSY | C770404
13 | 1 | 250015 | 1/2" ANCO NUT | N/A
TOWER LEG SIZE | SIDE ARM ASSY P/N | LEG U-BOLT ASSY P/N | LEG MTG. PLATE P/N
2" PIPE | SA62PL1TB | JR83AW | KH1614
2 1/2" PIPE | SA625PL1TB | JR84AW | KH1614
3" PIPE | SA63PL1TB | JR88AW | KH1614
3 1/2" PIPE | SA635PL1TB | JR89AW | KH1614
4" PIPE | SA64PL1TB | JR85AW | KH1614
5" PIPE | SA65PL1TB | JR86AW | KH1615
6" PIPE | SA66PL1TB | JR87AW | KH1615
8" PIPE | SA68PL1TB | JR90SAW | KH1716
R6 | GROUPED NOTES AND ADDED NOTE #4 & #5 | 12/09/96 | SBW
No. | Revision Description | Date & Rev By & Ckd By & App'd By
THIS DRAWING IS THE PROPERTY OF ROHN, IT IS NOT TO BE REPRODUCED, COPIED OR TRACED IN WHOLE OR IN PART WITHOUT OUR WRITTEN CONSENT.
ROHN
Scale: NONE | By | Date
Drawn: | RHB | 11/4/96
Checked: | GPW | 12/4/96
App. Eng.: | TS | 12/5/96
App. Sales: | JC | 12/5/96
Title: 6' SIDE ARM ASSY W/ TIE-BACK FOR STRAIGHT OR TAPERED SECTIONS
DRAWING NO.: C261006R6

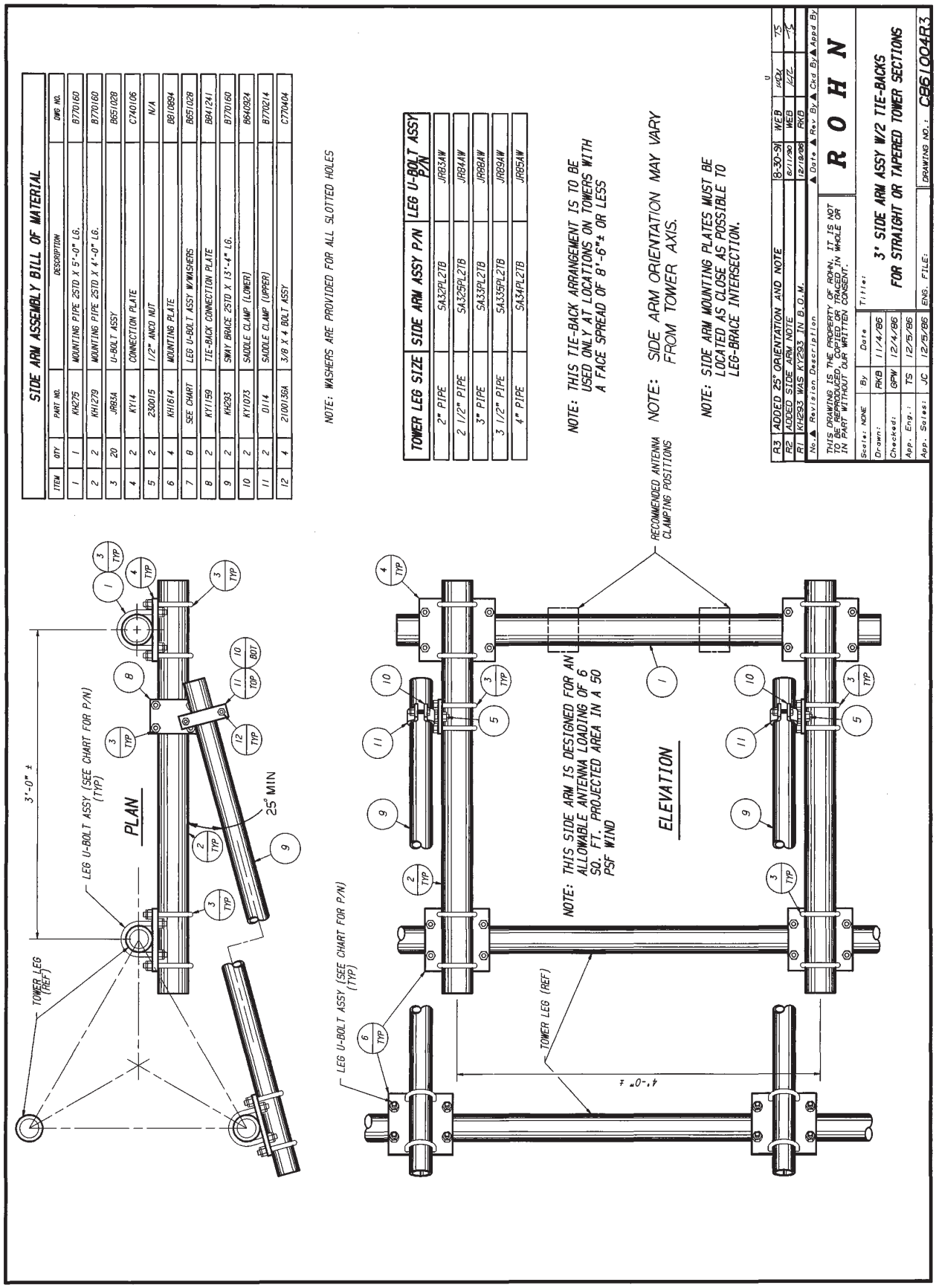
SIDE ARM ASSEMBLY BILL OF MATERIAL
ITEM | QTY | PART NO. | DESCRIPTION | DWG NO.
1 | 1 | KH275 | MOUNTING PIPE 2STD X 5'-0" LG. | B770160
2 | 2 | KH1279 | MOUNTING PIPE 2STD X 4'-0" LG. | B770160
3 | 20 | JR83A | U-BOLT ASSY | B651028
4 | 2 | KY14 | CONNECTION PLATE | C740106
5 | 2 | 230015 | 1/2" ANCO NUT | N/A
6 | 4 | KH1614 | MOUNTING PLATE | B810894
7 | 8 | SEE CHART | LEG U-BOLT ASSY W/WASHERS | B651028
8 | 2 | KY11159 | TIE-BACK CONNECTION PLATE | B841241
9 | 2 | KH293 | SWAY BRACE 2STD X 13'-4" LG. | B770160
10 | 2 | KY1073 | SADDLE CLAMP (LOWER) | B640924
11 | 2 | D114 | SADDLE CLAMP (UPPER) | B770214
12 | 4 | 210013SA | 3/8 X 4 BOLT ASSY | C770404
NOTE: WASHERS ARE PROVIDED FOR ALL SLOTTED HOLES
TOWER LEG SIZE | SIDE ARM ASSY P/N | LEG U-BOLT ASSY P/N
2" PIPE | SA32PL27B | JR83AW
2 1/2" PIPE | SA325PL27B | JR84AW
3" PIPE | SA33PL27B | JR86AW
3 1/2" PIPE | SA335PL27B | JR89AW
4" PIPE | SA34PL27B | JR85AW
NOTE: THIS TIE-BACK ARRANGEMENT IS TO BE USED ONLY AT LOCATIONS ON TOWERS WITH A FACE SPREAD OF 8'-6"± OR LESS
NOTE: SIDE ARM ORIENTATION MAY VARY FROM TOWER AXIS.
NOTE: SIDE ARM MOUNTING PLATES MUST BE LOCATED AS CLOSE AS POSSIBLE TO LEG-BRACE INTERSECTION.
R3 ADDED 25° ORIENTATION AND NOTE 8-30-91 WEB
R2 ADDED SIDE ARM NOTE 6/11/90 WEB
R1 KH293 WAS KY293 IN B.O.M. 12/18/86 RKB
No. ▲ Revision Description ▲ Date ▲ Rev. By ▲ Ckd By ▲ Appd By
THIS DRAWING IS THE PROPERTY OF ROHN, IT IS NOT TO BE REPRODUCED, COPIED OR TRACED IN WHOLE OR IN PART WITHOUT OUR WRITTEN CONSENT.
R O H N
Scale: NONE
Drawn: RKB 11/4/86
Checked: GFW 12/4/86
App. Eng.: TS 12/5/86
App. Sales: JC 12/5/86
Title: 3' SIDE ARM ASSY W/2 TIE-BACKS FOR STRAIGHT OR TAPERED TOWER SECTIONS
ENG. FILE:
DRAWING NO.: C861004R3
PLAN
ELEVATION
TOWER LEG (REF)
LEG U-BOLT ASSY (SEE CHART FOR P/N) (TYP)
3'-0" ±
25° MIN
4'-0" ±
RECOMMENDED ANTENNA CLAMPING POSITIONS
NOTE: THIS SIDE ARM IS DESIGNED FOR AN ALLOWABLE ANTENNA LOADING OF 6 SQ. FT. PROJECTED AREA IN A 50 PSF WIND

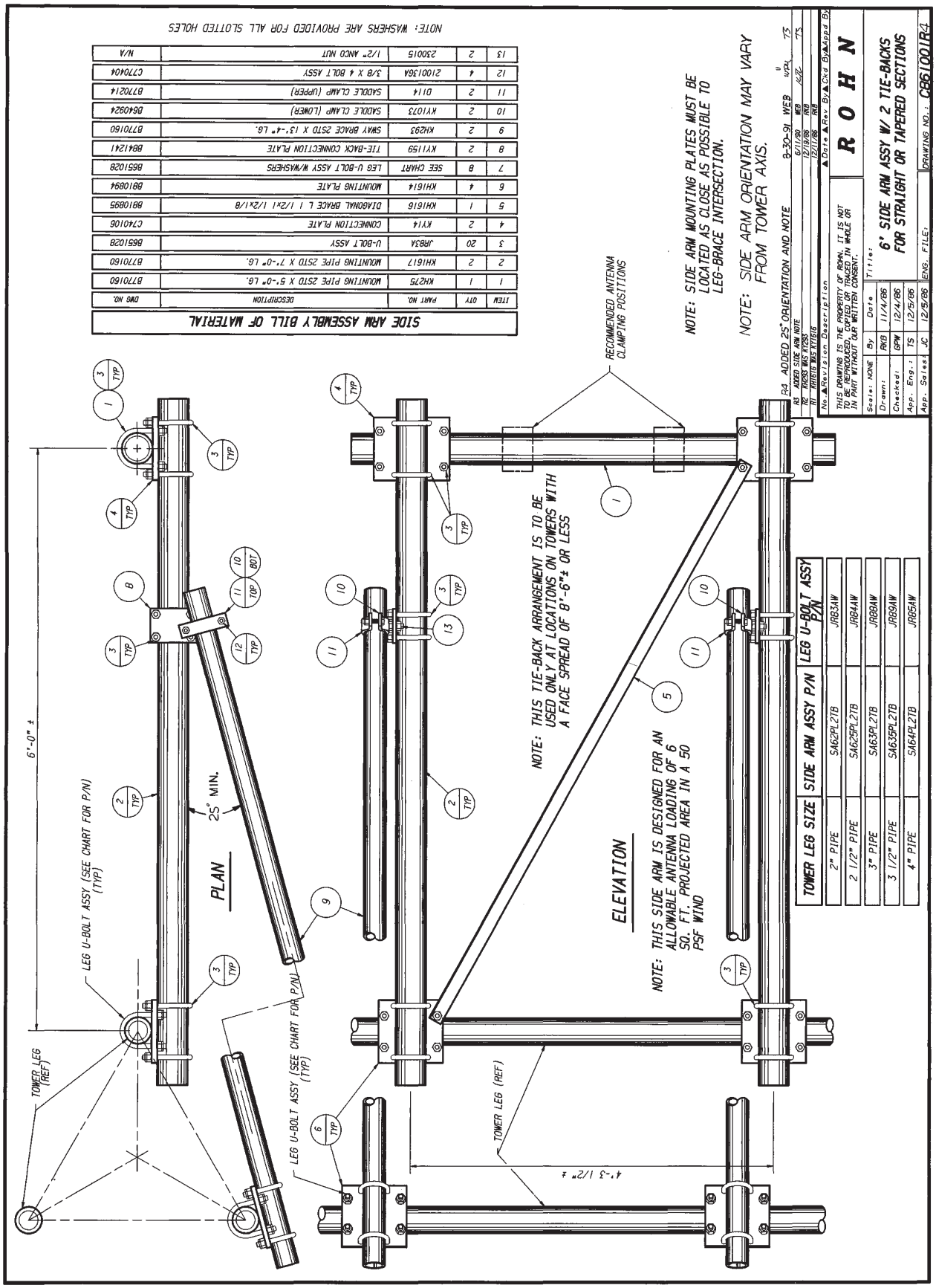

TOWER LEG SIZE	SIDE ARM ASSY P/N	LEG U-BOLT ASSY P/N
2" PIPE	SA62PL2TB	JR83AW
2 1/2" PIPE	SA62PL2TB	JR84AW
3" PIPE	SA63PL2TB	JR89AW
3 1/2" PIPE	SA63PL2TB	JR89AW
4" PIPE	SA64PL2TB	JR85AW

SIDE ARM ASSEMBLY BILL OF MATERIAL

ITEM	QTY	PART NO.	DESCRIPTION	DWG NO.
1	1	KH275	MOUNTING PIPE 2STD X 5'-0" LG.	B770160
2	2	KH1617	MOUNTING PIPE 2STD X 7'-0" LG.	B770160
3	20	JR83A	U-BOLT ASSY	B651028
4	2	KY14	CONNECTION PLATE	C740106
5	1	KH1616	DIAGONAL BRACE L 1 1/2x1 1/2x1/8	B881089 5
6	4	KH1614	MOUNTING PLATE	B881089 4
7	8	SEE CHART	LEG U-BOLT ASSY W/WASHERS	B651028
8	2	KY1159	TIE-BACK CONNECTION PLATE	B841241
9	2	KH293	SWAY BRACE 2STD X 13'-4" LG.	B770160
10	2	KY1073	SADDLE CLAMP (LOWER)	B864092 4
11	2	D114	SADDLE CLAMP (UPPER)	B770214
12	4	210013 6A	3/8 X 4 BOLT ASSY	C770404
13	2	230015	1/2" ANCO NUT	N/A

NOTE: WASHERS ARE PROVIDED FOR ALL SLOTTED HOLES

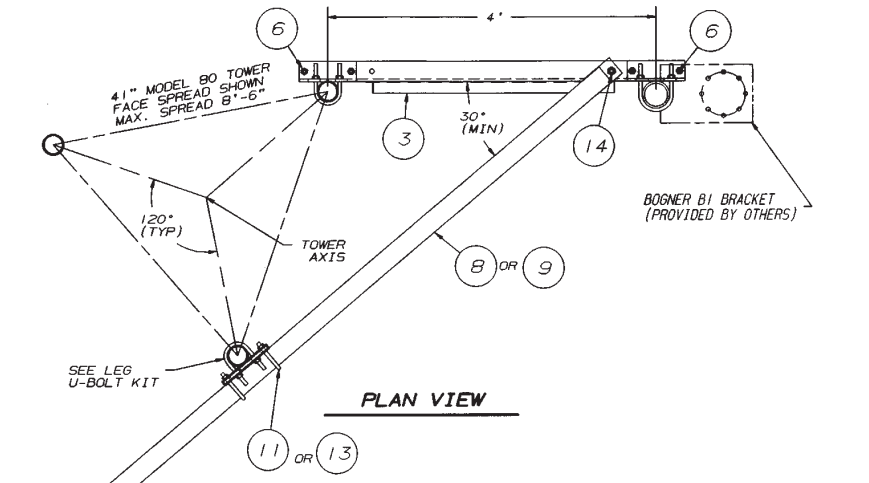

PLAN VIEW

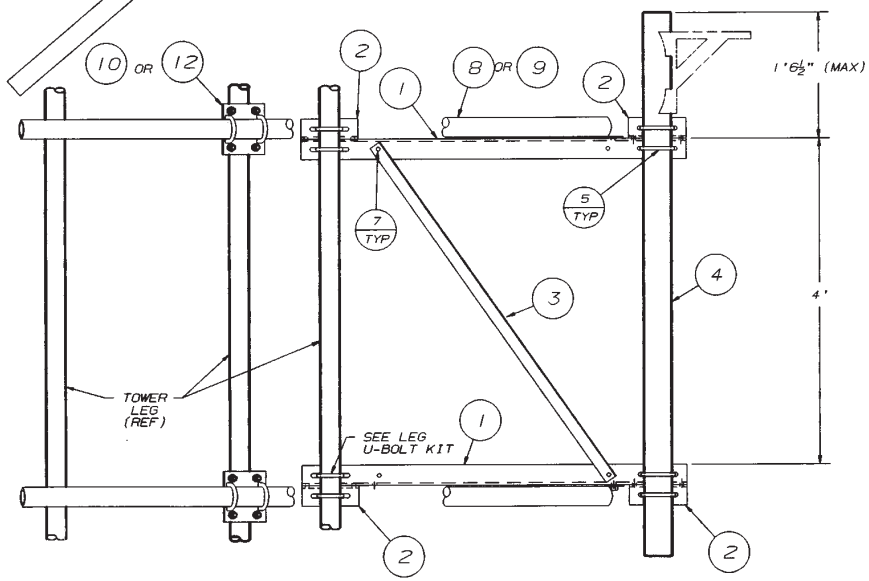

ELEVATION

P/N VY4493A SIDE ARM ASSEMBLY BILL OF MATERIAL				
ITEM	QTY	PART NO.	DESCRIPTION	DWG NO.
1	2	VY4491	TOP AND BOTTOM SUPPORT ANGLE	B911105
2	4	VY4483	TOP AND BOTTOM BRACKET SUPPORTS	B910998
3	1	VY4490	DIAG. KNEE BRACE	B911102
4	1	KH1215	MOUNTING PIPE (3 1/2EH X 6'-8")	B790909
5	4	JR89A	U-BOLT ASSY.	B651028
6	8	210019GA	BOLT ASSY 1/2 X 1 3/4"	C770404
7	2	210018GA	BOLT ASSY 1/2 X 1 1/2"	C770404

★ P/N VY4496A 11'TIE-BACK ASSY(5'±MAX.F.S.)
★★ P/N VY4497A 15'TIE-BACK ASSY (8'-6"±MAX.F.S.)

ITEM	★	★★	PART NO.	DESCRIPTION	DWG NO.
8	1	---	VY4488	11' TIE-BACK 2 STD PIPE	B911101
9	---	1	VY4484	15' TIE-BACK 2 1/2 STD PIPE	B910999
10	---	1	VY4063	TIE-BACK PLATE	B871009
11	---	2	JR84A	U-BOLT ASSY	B651028
12	1	---	KH1614	TIE-BACK PLATE	B810894
13	2	---	JR83A	U-BOLT ASSY	C770404
14	1	1	210030GA	BOLT ASSY (5/8 X 1 3/4 ")	C770404

LEG U-BOLT KITS		
LEG SIZE	U-BOLT P/N (4-REQ'D)	KIT ASSY P/N
2" PIPE	JR83AW	JR83AW4
2-1/2" PIPE	JR84AW	JR84AW4
3" PIPE	JR88AW	JR88AW4
3-1/2" PIPE	JR89AW	JR89AW4
4" PIPE	JR85AW	JR85AW4

SIDE ARM ORDERING INFORMATION

1 - SIDE ARM ASSEMBLY
2 - LEG U-BOLT KIT ASSEMBLIES
2 - TIE-BACK KIT ASSEMBLIES

GENERAL NOTES

1. PAL NUTS ARE PROVIDED FOR ALL BOLTS.
2. FLAT WASHERS ARE PROVIDED FOR ALL SLOTTED HOLES.
3. SIDE ARM MOUNTING PLATES MUST BE LOCATED AS CLOSE AS POSSIBLE TO LEG-BRACE INTERSECTION.
4. BRACES HAVE BEEN OMITTED FOR CLARITY OF SIDE ARM CONNECTION PLATES.
5. WASHERS ARE PROVIDED FOR ALL SLOTTED HOLES.
6. THIS SIDE ARM IS DESIGNED FOR A MAXMIUM OVERTURNING MOMENT FROM THE ANTENNA OF 4.2 FT-KIPS

No.	Revision Description	Date	Rev. By	Ckd By	Appd By
R2	QTY CHANGE IN ITEM'S 10, 12, & 14	12-29-92	JDM	WDU	TS
R1	KH1614 WAS VY1614	5-15-91	RKB	JDM	

R O H N

Scale: NONE	By	Date
Drawn:	RKB	4-18-91
Checked:	WDU	5-3-91
App. Eng.:	TS	5-10-91
App. Sales:	JC	5-10-91

Title: 4'SIDE ARM ASSY W/2 TIE BACKS BMR10 & BMR12 ANTENNAS (STRAIGHT)

ENG. FILE:

DRAWING NO.: C911040 R2

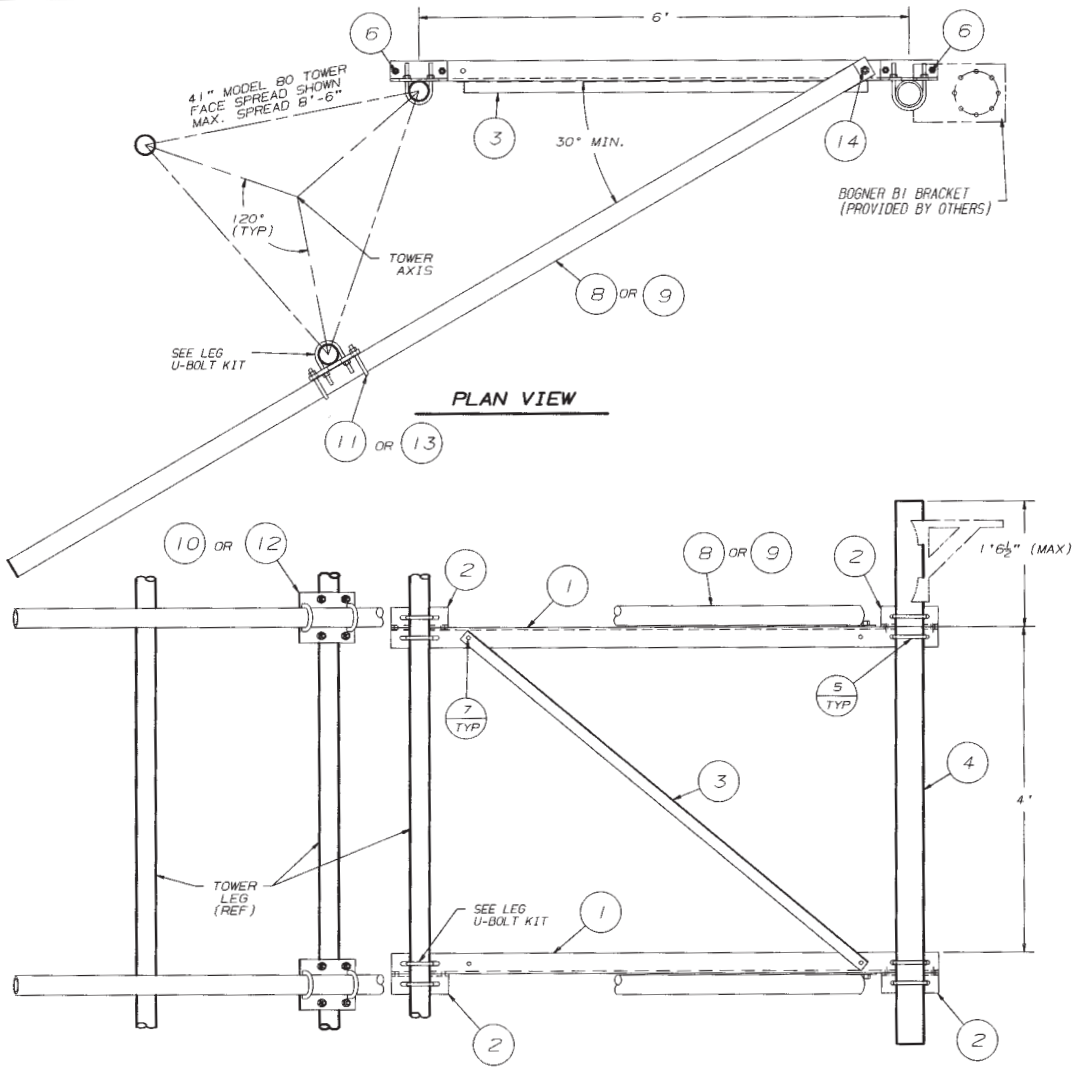

P/N VY4494A SIDE ARM ASSEMBLY BILL OF MATERIAL

ITEM	QTY	PART NO.	DESCRIPTION	DWG NO.
1	2	VY4482	TOP AND BOTTOM SUPPORT ANGLE	C910878
2	4	VY4483	TOP AND BOTTOM BRACKET SUPPORTS	B910998
3	1	VY4061	DIAG. KNEE BRACE	B871007
4	1	KH1215	MOUNTING PIPE (3 1/2EH X 6'-8")	B790909
5	4	JR89A	U-BOLT ASSY	B651028
6	8	2100190A	BOLT ASSY 1/2 X 1 3/4"	C770404
7	2	2100180A	BOLT ASSY 1/2 X 1 1/2"	C770404

★ P/N VY4496A 11'TIE-BACK ASSY(5'±MAX.F.S.)
★★ P/N VY4497A 15'TIE-BACK ASSY (8'-6"±MAX.F.S.)

ITEM	★	★★	PART NO.	DESCRIPTION	DWG NO.
8	1	---	VY4488	11' TIE-BACK 2 STD PIPE	B911101
9	---	1	VY4484	15' TIE-BACK 2 1/2 STD PIPE	B910999
10	---	1	VY4063	TIE-BACK PLATE	B871009
11	---	2	JR84A	U-BOLT ASSY	B651028
12	1	---	KH1614	TIE-BACK PLATE	B810894
13	2	---	JR83A	U-BOLT ASSY	C770404
14	1	1	2100300A	BOLT ASSY (5/8 X 1 3/4 ")	C770404

LEG U-BOLT KITS

LEG SIZE	U-BOLT P/N (4-REQ'D)	KIT ASSY P/N
2" PIPE	JR83AW	JR83AW4
2-1/2" PIPE	JR84AW	JR84AW4
3" PIPE	JR88AW	JR88AW4
3-1/2" PIPE	JR89AW	JR89AW4
4" PIPE	JR85AW	JR85AW4

SIDE ARM ORDERING INFORMATION

1 - SIDE ARM ASSEMBLY
2 - LEG U-BOLT KIT ASSEMBLIES
2 - TIE-BACK KIT ASSEMBLIES

GENERAL NOTES

1. PAL NUTS ARE PROVIDED FOR ALL BOLTS.
2. FLAT WASHERS ARE PROVIDED FOR ALL SLOTTED HOLES.
3. SIDE ARM MOUNTING PLATES MUST BE LOCATED AS CLOSE AS POSSIBLE TO LEG-BRACE INTERSECTION.
4. BRACES HAVE BEEN OMITTED FOR CLARITY OF SIDE ARM CONNECTION PLATES.
5. WASHERS ARE PROVIDED FOR ALL SLOTTED HOLES.
6. THIS SIDE ARM IS DESIGNED FOR A MAXMIUM OVERTURNING MOMENT FROM THE ANTENNA OF 4.2 FT-KIPS

No.	Revision Description	Date	Rev. By	Ckd By	Appd By
R2	QTY CHANGE IN ITEM'S 10, 12, & 14	12-29-92	JDM	WDU	TS
R1	KH1614 WAS VY1614	5-14-91	RKB	RKB	TS

R O H N

Scale: NONE	By	Date
Drawn:	RKB	4-18-91
Checked:	WDU	5-3-91
App. Eng.:	TS	5-10-91
App. Sales:	JC	5-10-91

Title: 6'SIDE ARM ASSY W/2 TIE BACKS BMR10 & BMR12 ANTENNAS (STRAIGHT)

ENG. FILE:

DRAWING NO.: C910877 R2

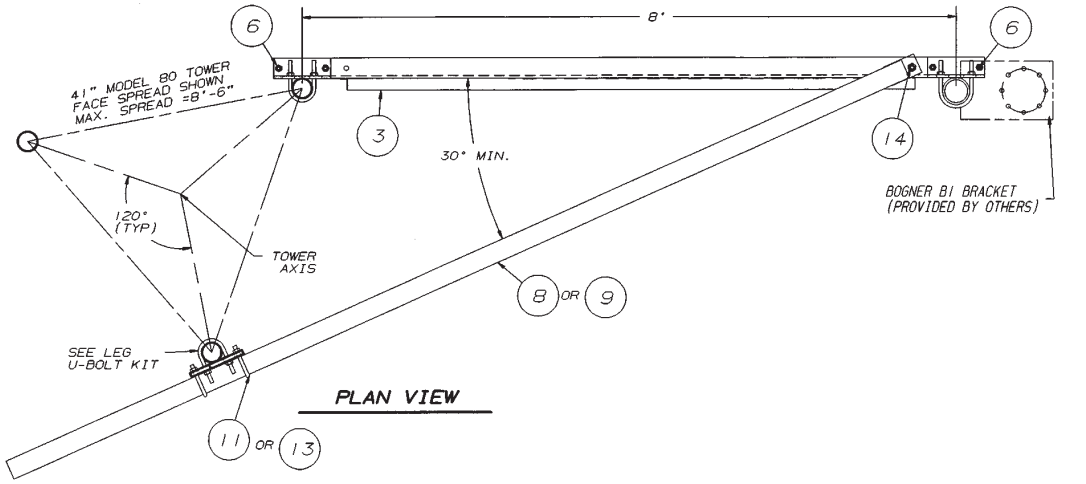

PLAN VIEW

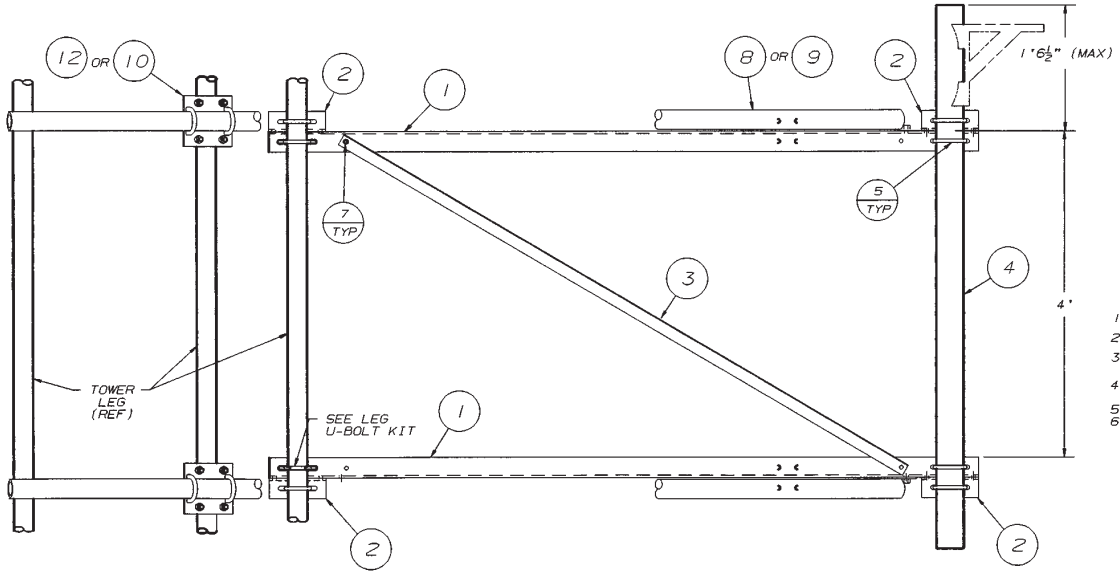

ELEVATION

P/N VY4495A SIDE ARM ASSEMBLY BILL OF MATERIAL				
ITEM	QTY	PART NO.	DESCRIPTION	DWG NO.
1	2	VY4492	TOP AND BOTTOM SUPPORT ANGLE	C911037
2	4	VY4483	TOP AND BOTTOM BRACKET SUPPORTS	B910998
3	1	VY4512	DIAG. KNEE BRACE	B911103
4	1	KH1215	MOUNTING PIPE (3 1/2EH X 6'-8")	B790909
5	4	JR89A	U-BOLT ASSY	B651028
6	8	210019GA	BOLT ASSY 1/2 X 1 3/4"	C770404
7	2	210018GA	BOLT ASSY 1/2 X 1 1/2"	C770404

★ P/N VY4496A 11'TIE-BACK ASSY(5'±MAX.F.S.)
★★ P/N VY4497A 15'TIE-BACK ASSY (8'-6"±MAX.F.S.)

ITEM	★	★★	PART NO.	DESCRIPTION	DWG NO.
8	1	---	VY4488	11' TIE-BACK 2 STD PIPE	B911101
9	---	1	VY4484	15' TIE-BACK 2 1/2 STD PIPE	B910999
10	---	1	VY4063	TIE-BACK PLATE	B871009
11	---	2	JR84A	U-BOLT ASSY	B651028
12	1	---	KH1614	TIE-BACK PLATE	B810894
13	2	---	JR83A	U-BOLT ASSY	C770404
14	1	1	210030GA	BOLT ASSY (5/8 X 1 3/4 ")	C770404

LEG U-BOLT KITS		
LEG SIZE	U-BOLT P/N (4-REQ'D)	KIT ASSY P/N
2" PIPE	JR83AW	JR83AW4
2-1/2" PIPE	JR84AW	JR84AW4
3" PIPE	JR88AW	JR88AW4
3-1/2" PIPE	JR89AW	JR89AW4
4" PIPE	JR85AW	JR85AW4

SIDE ARM ORDERING INFORMATION

1 - SIDE ARM ASSEMBLY
2 - LEG U-BOLT KIT ASSEMBLIES
2 - TIE-BACK KIT ASSEMBLIES

GENERAL NOTES

1. PAL NUTS ARE PROVIDED FOR ALL BOLTS.
2. FLAT WASHERS ARE PROVIDED FOR ALL SLOTTED HOLES.
3. SIDE ARM MOUNTING PLATES MUST BE LOCATED AS CLOSE AS POSSIBLE TO LEG-BRACE INTERSECTION.
4. BRACES HAVE BEEN OMITTED FOR CLARITY OF SIDE ARM CONNECTION PLATES.
5. WASHERS ARE PROVIDED FOR ALL SLOTTED HOLES.
6. THIS SIDE ARM IS DESIGNED FOR A MAXMIUM OVERTURNING MOMENT FROM THE ANTENNA OF 4.2 FT-KIPS

No.	Revision Description	Date	Rev By	Ckd By	Appd By
R2	QTY CHANGE IN ITEM'S 10, 12, & 14	12-29-92	JDM	WDU	TS
R1	KH1614 WAS VY1614 & VY4512 WAS VY4491	5-14-91	RKB	WDU	

R O H N

Scale: NONE	By	Date
Drawn:	RKB	4-18-91
Checked:	WDU	5-3-91
App. Eng.:	TS	5-10-91
App. Sales:	JC	5-10-91

Title: 8'SIDE ARM ASSY W/2 TIE BACKS BMR10 & BMR12 ANTENNAS (STRAIGHT)

ENG. FILE:

DRAWING NO.: C911041 R2

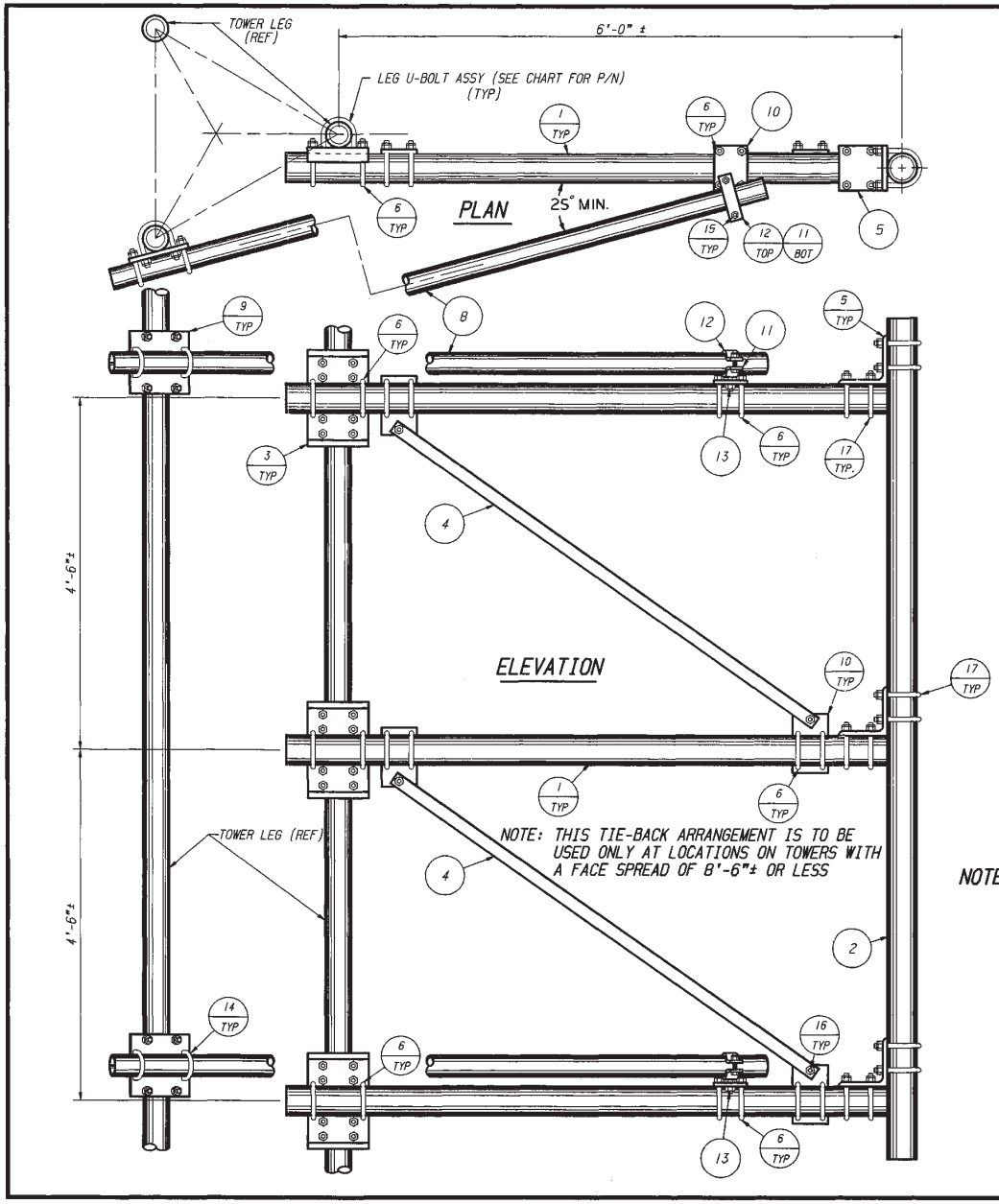

SIDE ARM ASSEMBLY BILL OF MATERIAL

ITEM	QTY	PART NO.	DESCRIPTION	DWG NO.
1	3	KH2541	HORIZONTAL MOUNTING PIPE	B770160
2	1	KH366	MOUNTING PIPE 2-1/2STD X 12'-0" LG.	B770160
3	3	KY1296	SIDE ARM PLATE	C860413
4	2	KB272	SIDE ARM BRACE	B830453
5	3	KY1215	SIDE ARM ANGLE	B850443
6	18	JR84A	U-BOLT ASSY	B651028
7	16	SEE CHART	LEG U-BOLT ASSY W/WASHERS	B651028
8	2	KH293	SWAY BRACE	B770160
9	2	KH1614	CONNECTION PLATE	B810894
10	6	KY1078	CONNECTION PLATE	B830985
11	2	KY1073	SADDLE CLAMP (LOWER)	B640924
12	2	D114	SADDLE CLAMP (UPPER)	B770214
13	2	230015	1/2" ANCO NUT	N/A
14	4	JR83A	U-BOLT ASSY	B651028
15	4	2100136A	3/8 X 4 BOLT ASSY	C770404
16	4	2100186A	1/2 X 1-1/2 BOLT ASSY	C770404
17	12	JR84SA	U-BOLT ASSY	B730637

NOTE: WASHERS ARE PROVIDED FOR ALL SLOTTED HOLES

TOWER LEG SIZE	SIDE ARM ASSY P/N	LEG U-BOLT ASSY P/N
2" PIPE	KY1297A	JR83AW
2 1/2" PIPE	KY1298A	JR84AW
3" PIPE	KY1299A	JR88AW
3 1/2" PIPE	KY1300A	JR89AW
4" PIPE	KY1301A	JR85AW

NOTE: 1. SIDE ARM MOUNTING PLATES MUST BE LOCATED AS CLOSE AS POSSIBLE TO LEG-BRACE INTERSECTION.
2. SIDE ARM ORIENTATION MAY VARY FROM TOWER AXIS.

No.	Revision Description	Date	Rev By	Ckd By	Appd By
R4	ADDED 25° ORIENTATION AND NOTE	8-30-91	WEB	[illegible]	TS
R3	REVISED U-BOLT LOCATIONS	6/27/91	WEB	[illegible]	TS
R2	P/N KY1296 WAS KY1151; REDRAWN	7/7/88	JHD/WRF	KTL	TS
R1	ADD 2-KY1078 & BRACES WERE KY1077	1/11/88	JHD	WDU	TS

ROHN

Scale: NONE	By	Date
Drawn:	GLJ	4/30/86
Checked:	KTL	4/30/86
App. Eng.:	TS	5/6/86
App. Sales:	JC	5/6/86

Title: UNIVERSAL HEAVY SIDE ARM ASSEMBLY FOR PD1132D ANTENNA

ENG. FILE:

DRAWING NO.: C860449R4

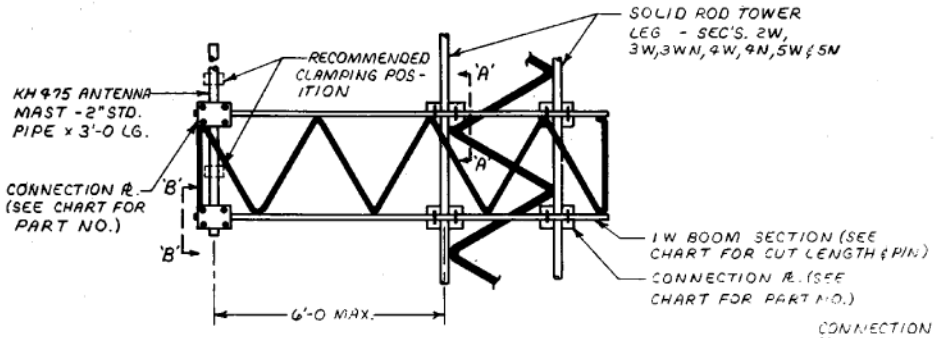

1W BOOM INSTALLATION FOR WELDED SECTIONS

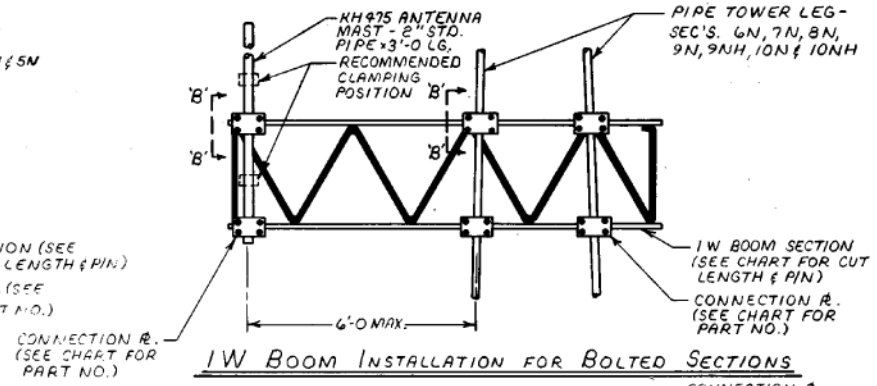

1W BOOM INSTALLATION FOR BOLTED SECTIONS

GENERAL NOTES

*1. ONE ANTENNA MAST KIT PROVIDED w/ EACH BOOM ASS'Y. IF ADDITIONAL MAST KITS ARE REQUIRED THEY MUST BE PURCHASED SEPARATELY. SEE CHART FOR ASS'Y. NO. AND DATA.

2. OUTSIDE LEG OF 1W BOOM SECTION HAS BEEN OMITTED FOR CLARITY OF BOOM CONNECTIONS.

3. ALL BOOMS ARE DESIGNED TO SUPPORT A MAXIMUM THRUST OF 90 LBS., 6' FROM THE TOWER LEG AND 3' ABOVE THE BOOM AXIS.

ASS'Y. NO. DESCRIPTION		
SSV -	25 -	6B
TOWER MODEL	SECT. NO.	BOOM CUT LENGTH

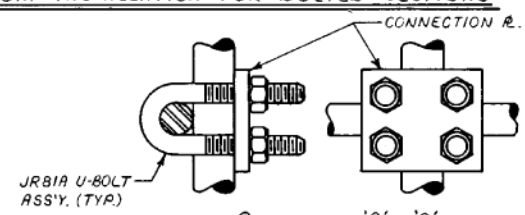

SECTION 'A'-'A'

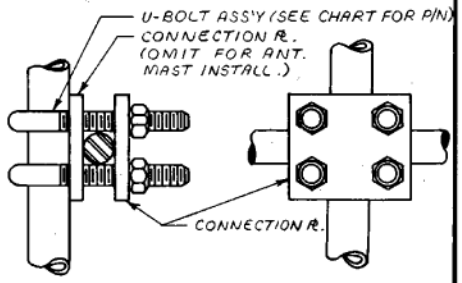

SECTION 'B'-'B'

BILL OF MATERIAL

Ass'y. No.	Part No.	Qty.	Description	Dwg. No.
SSV-25-6B	VY 971	2	CONNECTION R.	B-710330R1
	VY 970	4	CONNECTION R.	B-710330R1
	VY 973	1	6' LG. 1W BOOM	B-770479
	JR81A	8	U-BOLT ASS'Y.	B-651028R14
	JR83A	4	U-BOLT ASS'Y.	B-651028R14
	KH 475	1	ANTENNA MAST	B-770160R2
SSV-25-9B	VY 971	2	CONNECTION R.	B-710330R1
	VY 970	4	CONNECTION R.	B-710330R1
	VY 974	1	9' LG. 1W BOOM	B-770479
	JR81A	8	U-BOLT ASS'Y.	B-651028R14
	JR83A	4	U-BOLT ASS'Y.	B-651028R14
	KH 475	1	ANTENNA MAST	B-770160R2
SSV-6-6B	VY 971	10	CONNECTION R.	B-710330R1
	VY 973	1	6' LG. 1W BOOM	B-770479
	JR83A	12	U-BOLT ASS'Y.	B-651028R14
	KH 475	1	ANTENNA MAST	B-770160R2
SSV-67-9B	VY 971	10	CONNECTION R.	B-710330R1
	VY 974	1	9' LG. 1W BOOM	B-770479
	JR83A	12	U-BOLT ASS'Y.	B-651028R14
	KH 475	1	ANTENNA MAST	B-770160R2
SSV-67-12B	VY 971	10	CONNECTION R.	B-710330R1
	VY 975	1	12' LG. 1W BOOM	B-770479
	JR83A	12	U-BOLT ASS'Y.	B-651028R14
	KH 475	1	ANTENNA MAST	B-770160R2
SSV-7-15B	VY 971	10	CONNECTION R.	B-710330R1
	VY 976	1	15' LG. 1W BOOM	B-770479
	JR83A	12	U-BOLT ASS'Y.	B-651028R14
	KH 475	1	ANTENNA MAST	B-770160R2
SSV-8-9B	VY 971	2	CONNECTION R.	B-710330R1
	VY 972	8	CONNECTION R.	B-710330R1
	VY 974	1	9' LG. 1W BOOM	B-770479
	JR83A	4	U-BOLT ASS'Y.	B-651028R14
	JR89A	8	U-BOLT ASS'Y.	B-651028R14
	KH 475	1	ANTENNA MAST	B-770160R2
SSV-89-12B	VY 971	2	CONNECTION R.	B-710330R1
	VY 972	8	CONNECTION R.	B-710330R1
	VY 975	1	12' LG. 1W BOOM	B-770479
	JR83A	4	U-BOLT ASS'Y.	B-651028R14
	JR89A	8	U-BOLT ASS'Y.	B-651028R14
	KH 475	1	ANTENNA MAST	B-770160R2
SSV-8910-15B	VY 971	2	CONNECTION R.	B-710330R1
	VY 972	8	CONNECTION R.	B-710330R1
	VY 976	1	15' LG. 1W BOOM	B-770479
	JR83A	4	U-BOLT ASS'Y.	B-651028R14
	JR89A	8	U-BOLT ASS'Y.	B-651028R14
	KH 475	1	ANTENNA MAST	B-770160R2
SSV-910-18B	VY 971	2	CONNECTION R.	B-710330R1
	VY 972	8	CONNECTION R.	B-710330R1
	VY 977	1	18' LG. 1W BOOM	B-770479
	JR83A	4	U-BOLT ASS'Y.	B-651028R14
	JR89A	8	U-BOLT ASS'Y.	B-651028R14
	KH 475	1	ANTENNA MAST	B-770160R2
VY 978*	VY 971	2	CONNECTION R.	B-710330R1
	JR83A	4	U-BOLT ASS'Y.	B-651028R14
	KH 475	1	ANTENNA MAST	B-770160R2

No. &	Revision Description	Date	By
R2	REVISED GENERAL NOTE 3. TS WM	10-15-88	STP
R1	REDRAWN & REVISED P/N'S.	6-24-77	MDI

Unarco-Rohn
Division of Unarco Industries, Inc.

Title: 1W BOOM INSTALLATIONS

Scale: NONE
Drawn by: MDI — Date: 6-24-77
Checked by: — Date: 6-27-77
Approved by Engineering: — Date: 6-28-77
Approved by Production: — Date:
Approved by Sales: PM — Date: 6-28-77

Unless otherwise specified, dimensions are given in inches.
Tolerances: Decimals ±, Fractions ±, Angles ±
Material — Finish — Weight

File Number
Drawing Number: C-710348R2

BILL OF MATERIAL

ITEM	QUAN.	PART NO.	DESCRIPTION	DWG. NO.
1	2	D 11 1	ARM	C 750106
2	1	D 11 2	CROSSBRACE	C 750106
3	2	D 11 3	BRACE	C 750106
4	4	D 11 4	CLAMP SADDLE	B770214
5	1	D 10 2	MAST SUPPORT - PIPE 2 STD. X 5' LG.	
6	4	210005GA	3/8 X 1 1/4 BOLT ASS'Y.	
7	8	210013GA	3/8 X 4 BOLT ASS'Y.	
8	2	JR 61A	U-BOLT ASS'Y.	B 651028

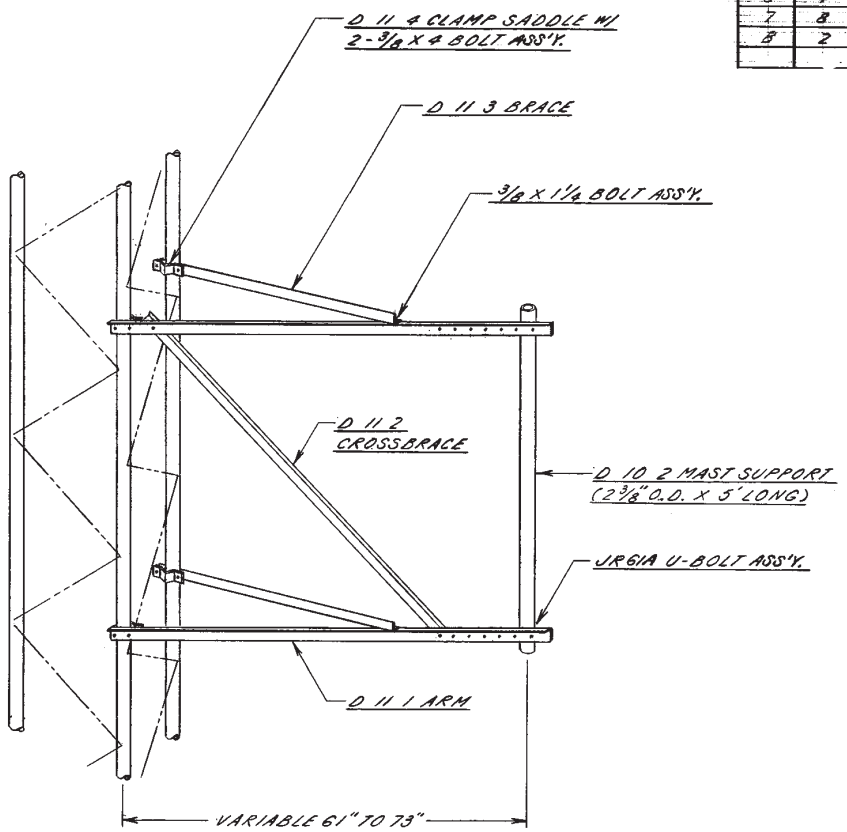

D1130 SIDE ARM

NOTE: SIDE ARM AND BRACE ANGLE MUST BE LOCATED AS CLOSE AS POSSIBLE TO LEG-BRACE INTERSECTION.

NOTE:
SIDE ARM DESIGNED TO SUPPORT A MAXIMUM LATERAL THRUST OF 150 LB. APPLIED 5 FT. ABOVE TOP OF MAST SUPPORT PIPE.

No.	Revision Description	Date	By
R4	ADDED SIDE ARM NOTE	6/11/90	WEB
R3	DELETED WIND LOAD	3/18/88	FHT
R2	REV. ASS'Y. P/N.	1/12/79	GLS
R1	REV. P/N & ADDED DESIGN WIND LOAD	10-2-78	MDI

ROHN

Title: D1130 SIDE ARM ASSEMBLY

Scale: NONE

Drawn by: GLS Date: 7/22/76

Checked by: Date: 7-29-76

Approved by Engineering: Date: 11-3-76

Approved by Production: Date:

Approved by Sales: Date: 11-3-76

Unless otherwise specified, dimensions are given in inches.
Tolerances: Decimals ± Fractions ± Angles ±
Material Finish Weight

File Number

Drawing Number: C 760571 R4

BILL OF MATERIAL

ITEM	QUAN.	PART NO.	DESCRIPTION	DWG. NO.
1	3	D 11 1	ARM	C 750106
2	1	D 11 2	CROSSBRACE	C 750106
3	3	D 11 3	BRACE	C 750106
4	6	D 11 4	CLAMP SADDLE	B770214
5	1	KH275	MAST SUPPORT - PIPE 2 STD. X 5' LG.	
6	5	210005GA	3/8 X 1 1/4 BOLT ASS'Y.	C770404
7	12	210013GA	3/8 X 4 BOLT ASS'Y.	C770404
8	3	JR 61A	U-BOLT ASSY.	B651028

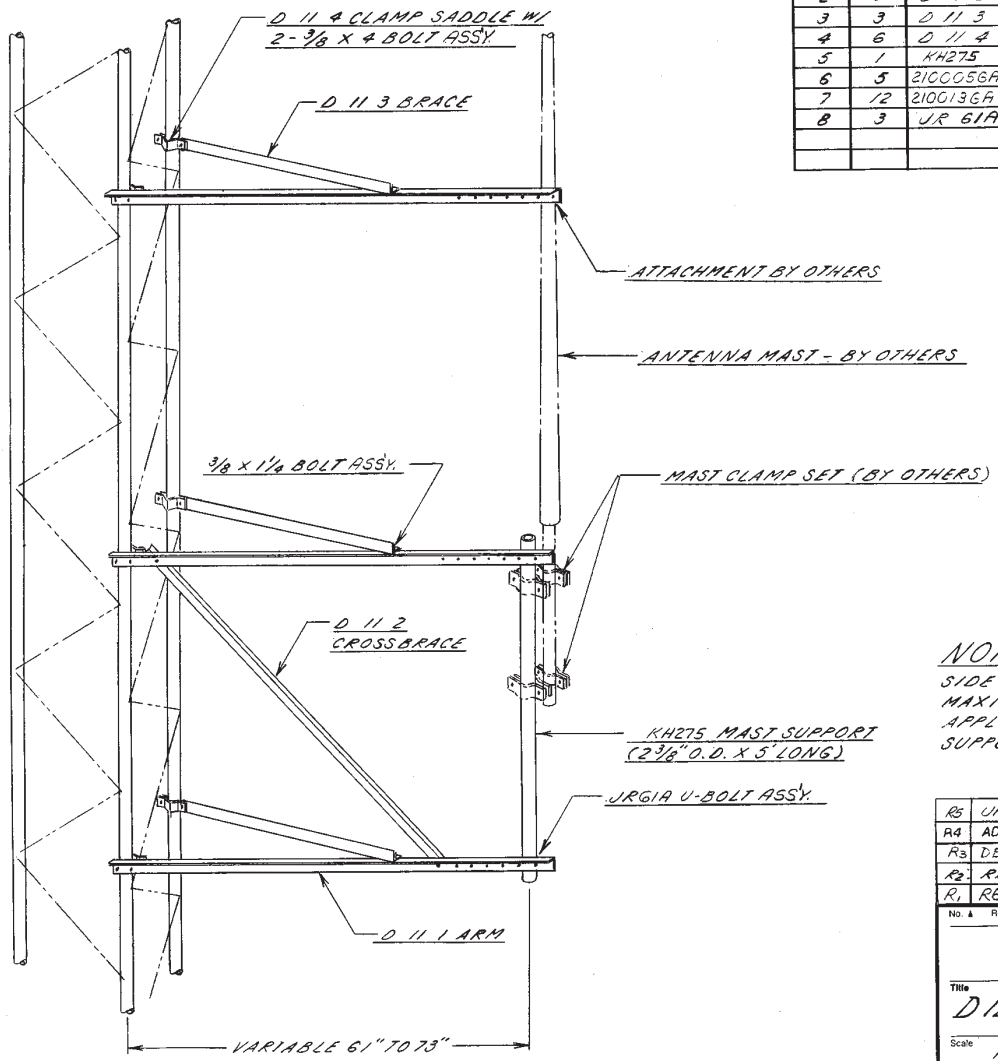

D1230 SIDE ARM

NOTE: SIDE ARM AND BRACE ANGLE MUST BE LOCATED AS CLOSE AS POSSIBLE TO LEG - BRACE INTERSECTION.

NOTE:
SIDE ARM DESIGNED TO SUPPORT A MAXIMUM LATERAL THRUST OF 150 LB. APPLIED 5 FT. ABOVE TOP OF MAST SUPPORT PIPE.

No.	Revision Description	Date	By
R5	UPDATED DWG.	3-19-91	TRTZ
R4	ADDED SIDE ARM NOTE	6/11/90	WEBV
R3	DELETED WIND LOAD	3/18/88	PHT
R2	REV. ASS'Y. P/N.	1/12/79	GLS
R1	REV. P/N & ADDED DESIGN WIND LOAD	10-2-78	MDI

ROHN

Title: D1230 SIDE ARM ASSEMBLY

Scale: NONE

Drawn by: GLS Date: 7/23/76

Checked by: WBR Date: 7-29-76

Approved by Engineering: CW Date: 11-3-76

Approved by Production: Date:

Approved by Sales: GR Date: 11-3-76

Unless otherwise specified, dimensions are given in inches.
Tolerances: Decimals ± Fractions ± Angles ±
Material: Finish: Weight:

File Number:

Drawing Number: C 760579 R5

BILL OF MATERIAL

ITEM	QUAN.	PART NO.	DESCRIPTION	DWG. NO.
1	2	D 13 1	ARM	C 760575
2	1	D 13 2	CROSSBRACE	C 760575
3	2	D 13 3	BRACE	C 760575
4	4	D 11 4	CLAMP SADDLE	B770214
5	1	KH275	MAST SUPPORT - PIPE 2 STD. X 5' LG.	
6	4	210005GA	3/8 X 1 1/4 BOLT ASS'Y	C770404
7	8	210013GA	3/8 X 4 BOLT ASS'Y	C770404
8	2	JR 61A	U-BOLT ASS'Y	B 651028

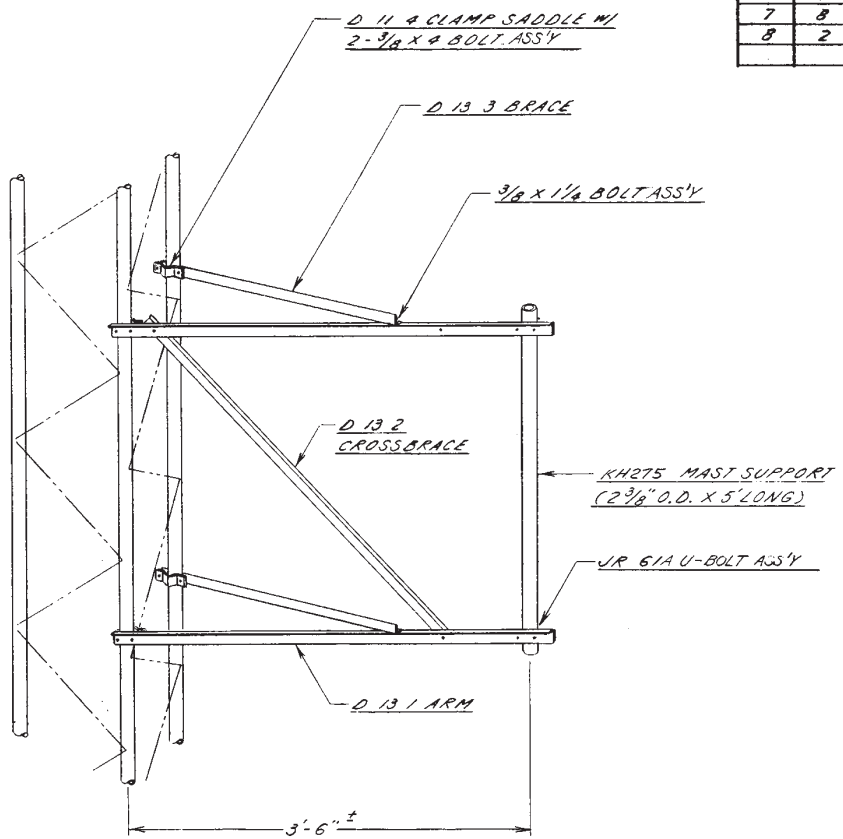

D1330 SIDE ARM

NOTE: SIDE ARM AND BRACE ANGLE MUST BE LOCATED AS CLOSE AS POSSIBLE TO LEG - BRACE INTERSECTION.

NOTE:

SIDE ARM DESIGNED TO SUPPORT A MAXIMUM LATERAL THRUST OF 150 LB. APPLIED 5 FT. ABOVE TOP OF MAST SUPPORT PIPE.

No.	Revision Description	Date	By
R7	ADDED NOTE & UPDATED DWG.	3-19-91	[illegible]
R6	DELETED WIND LOAD	3-18-98	[illegible]
R5	REV. ASS'Y. P/N.	1/12/79	GLS
R4	REV. P/N & ADDED DESIGN WIND LOAD	10-2-78	MDI
R3	CORRECTED REF. DWG. NO.	7/6/77	GLS
R2	REV. BOLT & U-BOLT P/N'S	5-24-77	JHC
R1	RE-DRAW. CHANGE BOLT LENGTHS.	7/22/76	GLS

ROHN®

Title: D1330 SIDE ARM ASSEMBLY

Scale: NONE

Drawn by: GLS — Date: 7/22/76

Checked by: [illegible] — Date: 7-29-76

Approved by Engineering: CW — Date: 11-3-76

Approved by Production — Date

Approved by Sales: BR — Date: 11-3-76

Unless otherwise specified, dimensions are given in inches.
Tolerances: Decimals ± ; Fractions ± ; Angles ±

Material | Finish | Weight

File Number

Drawing Number: C 620720 R7

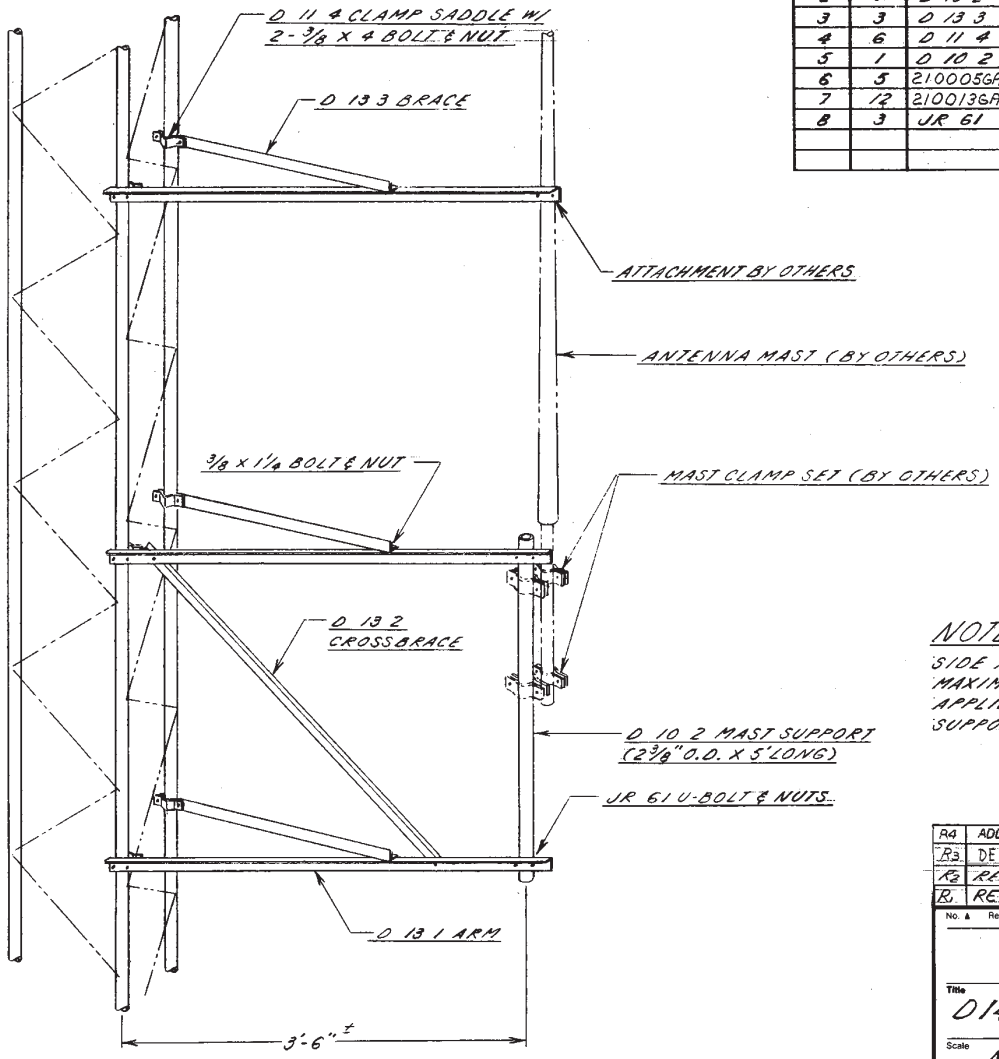

D1430 SIDE ARM

NOTE: SIDE ARM AND BRACE ANGLE MUST BE LOCATED AS CLOSE AS POSSIBLE TO LEG-BRACE INTERSECTION.

BILL OF MATERIAL

ITEM	QUAN.	PART NO.	DESCRIPTION	DWG. NO.
1	3	D 13 1	ARM	C 760575
2	1	D 13 2	CROSSBRACE	C 760575
3	3	D 13 3	BRACE	C 760575
4	6	D 11 4	CLAMP SADDLE	
5	1	D 10 2	MAST SUPPORT - PIPE 2 STD. X 5' LG.	
6	5	2100056A	3/8 X 1 1/4 BOLT ASS'Y.	
7	12	2100136A	3/8 X 4 BOLT ASS'Y.	
8	3	JR 61	U-BOLT & NUTS	A GS1030

NOTE:

SIDE ARM DESIGNED TO SUPPORT A MAXIMUM LATERAL THRUST OF 150 LB. APPLIED 5 FT. ABOVE TOP OF MAST SUPPORT PIPE.

No. ▲	Revision Description	▲Date	▲By
R4	ADDED SIDE ARM NOTE	6/11/90	WEB
R3	DELETED WIND LOAD	3/18/88	HT
R2	REV. ASSY. P/N.	4/12/79	GLS
R1	REV. P/N & ADDED DESIGN WIND LOAD	10-2-73	M.D.T.

ROHN

Title: D1430 SIDE ARM ASSEMBLY

Scale: NONE

Drawn by: GLS Date: 7/23/76

Checked by: [illegible] Date: 7-29-76

Approved by Engineering: CW Date: 11-3-76

Approved by Production: Date:

Approved by Sales: BR Date: 11-3-76

Unless otherwise specified, dimensions are given in inches.
Tolerances
Decimals ± Fractions ± Angles ±
Material Finish Weight

File Number

Drawing Number: C 760580 R4

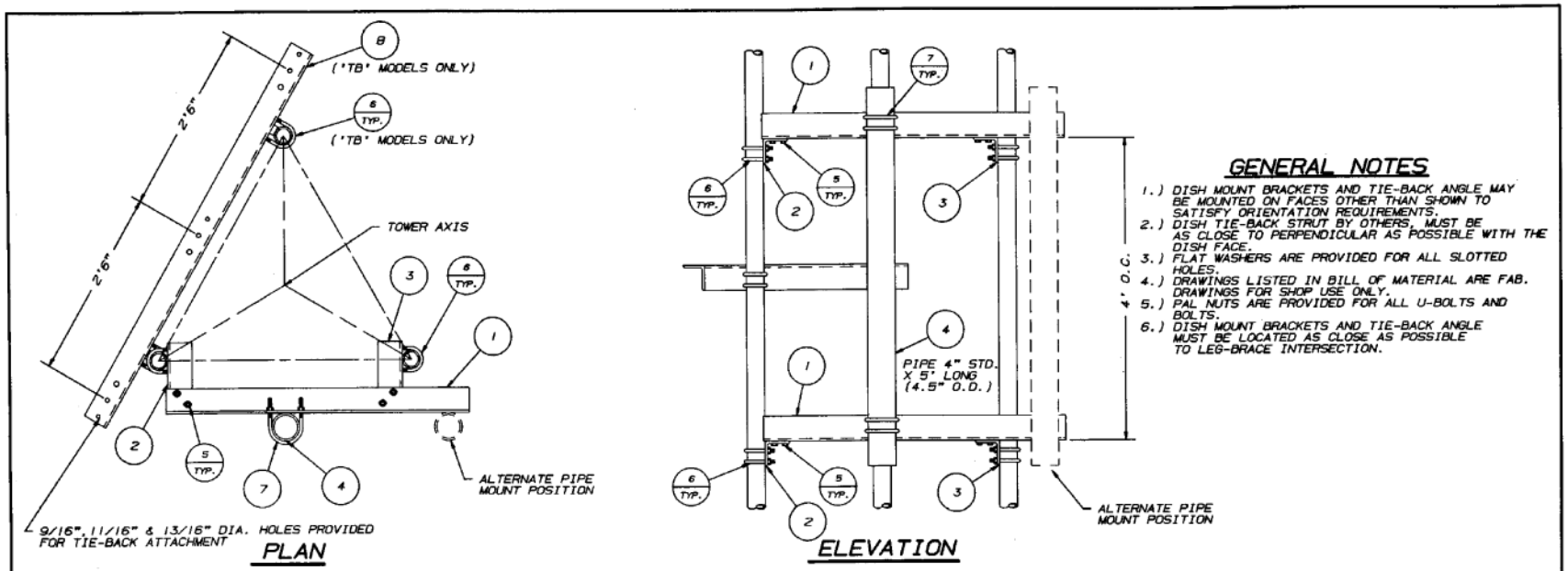

GENERAL NOTES

1.) DISH MOUNT BRACKETS AND TIE-BACK ANGLE MAY BE MOUNTED ON FACES OTHER THAN SHOWN TO SATISFY ORIENTATION REQUIREMENTS.
2.) DISH TIE-BACK STRUT BY OTHERS, MUST BE AS CLOSE TO PERPENDICULAR AS POSSIBLE WITH THE DISH FACE.
3.) FLAT WASHERS ARE PROVIDED FOR ALL SLOTTED HOLES.
4.) DRAWINGS LISTED IN BILL OF MATERIAL ARE FAB. DRAWINGS FOR SHOP USE ONLY.
5.) PAL NUTS ARE PROVIDED FOR ALL U-BOLTS AND BOLTS.
6.) DISH MOUNT BRACKETS AND TIE-BACK ANGLE MUST BE LOCATED AS CLOSE AS POSSIBLE TO LEG-BRACE INTERSECTION.

BILL OF MATERIAL

ASSEMBLY PART NO. DM834KD

ITEM	QUAN.	PART NO.	DESCRIPTION	DWG. NO.
1.	2	KY1556	DISH MOUNT BRACKET	B881444
2.	2	KY1557	SUPPORT BRACKET	B881445
3.	2	KY1558	SUPPORT BRACKET	B881445
4.	1	KH279	MOUNTING PIPE 4"STD. X 5'	B770160
5.	8	210019GAW	1/2X1-3/4 BOLT ASSY W/ WASHER	C770404
6.	8	JR83AW	U-BOLT ASSY. W/ WASHER	B651028
7.	4	JR85AW	U-BOLT ASSY. W/ WASHER	B651028

ASSEMBLY PART NO. DM834TBKD

ITEM	QUAN.	PART NO.	DESCRIPTION	DWG. NO.
1.	2	KY1556	DISH MOUNT BRACKET	B881444
2.	2	KY1557	SUPPORT BRACKET	B881445
3.	2	KY1558	SUPPORT BRACKET	B881445
4.	1	KH279	MOUNTING PIPE 4"STD. X 5'	B770160
5.	8	210019GAW	1/2X1-3/4 BOLT ASSY W/ WASHER	C770404
6.	12	JR83AW	U-BOLT ASSY. W/ WASHER	B651028
7.	4	JR85AW	U-BOLT ASSY. W/ WASHER	B651028
8.	1	KY1713	TIE-BACK ANGLE	B911150

ASSEMBLY PART NO. DM844KD

ITEM	QUAN.	PART NO.	DESCRIPTION	DWG. NO.
1.	2	KY1556	DISH MOUNT BRACKET	B881444
2.	2	KY1557	SUPPORT BRACKET	B881445
3.	2	KY1558	SUPPORT BRACKET	B881445
4.	1	KH279	MOUNTING PIPE 4"STD. X 5'	B770160
5.	8	210019GAW	1/2X1-3/4 BOLT ASSY W/ WASHER	C770404
6.	8	JR84AW	U-BOLT ASSY. W/ WASHER	B651028
7.	4	JR85AW	U-BOLT ASSY. W/ WASHER	B651028

ASSEMBLY PART NO. DM844TBKD

ITEM	QUAN.	PART NO.	DESCRIPTION	DWG. NO.
1.	2	KY1556	DISH MOUNT BRACKET	B881444
2.	2	KY1557	SUPPORT BRACKET	B881445
3.	2	KY1558	SUPPORT BRACKET	B881445
4.	1	KH279	MOUNTING PIPE 4"STD. X 5'	B770160
5.	8	210019GAW	1/2X1-3/4 BOLT ASSY W/ WASHER	C770404
6.	12	JR84AW	U-BOLT ASSY. W/ WASHER	B651028
7.	4	JR85AW	U-BOLT ASSY. W/ WASHER	B651028
8.	1	KY1713	TIE-BACK ANGLE	B911150

ASSEMBLY PART NO. DM854KD

ITEM	QUAN.	PART NO.	DESCRIPTION	DWG. NO.
1.	2	KY1556	DISH MOUNT BRACKET	B881444
2.	2	KY1557	SUPPORT BRACKET	B881445
3.	2	KY1558	SUPPORT BRACKET	B881445
4.	1	KH279	MOUNTING PIPE 4"STD. X 5'	B770160
5.	8	210019GAW	1/2X1-3/4 BOLT ASSY W/ WASHER	C770404
6.	8	JR86AW	U-BOLT ASSY. W/ WASHER	B651028
7.	4	JR85AW	U-BOLT ASSY. W/ WASHER	B651028

ASSEMBLY PART NO. DM854TBKD

ITEM	QUAN.	PART NO.	DESCRIPTION	DWG. NO.
1.	2	KY1556	DISH MOUNT BRACKET	B881444
2.	2	KY1557	SUPPORT BRACKET	B881445
3.	2	KY1558	SUPPORT BRACKET	B881445
4.	1	KH279	MOUNTING PIPE 4"STD. X 5'	B770160
5.	8	210019GAW	1/2X1-3/4 BOLT ASSY W/ WASHER	C770404
6.	12	JR86AW	U-BOLT ASSY. W/ WASHER	B651028
7.	4	JR85AW	U-BOLT ASSY. W/ WASHER	B651028
8.	1	KY1713	TIE-BACK ANGLE	B911150

No.	Revision Description	Date	Rev By	Ckd By	Appd By
R2	REDRAWN AND REVISED TO KNOCK DOWN	3-21-91	KTL	WDU	TS

R O H N

	By	Date
Scale: NONE		
Drawn:	WDU	10-4-76
Checked:	MDI	10-19-76
App. Eng.:	CW	10-25-76
App. Sales:	GR	10-28-76

Title: KNOCK-DOWN DISH MOUNT ASSEMBLY FOR MODEL 80 TOWERS

DRAWING NO.: C760776R2

Pipe - Hot Dip Galvanized

All pipe is hot dip galvanized inside and outside.

Pipe, Standard (Schedule 40)

Description		Part	
I.D.	Length	Number	Weight
2"	5'	KH275	20
2"	6'	KH1256	24
2"	6'8"	KH281	26
2"	7'	KH1617	27
2"	8'	KY863	30
2"	9'	VX1695	35
2"	10'	KH287	39
2"	11'	KH4476	43
2"	12'	KH365	47
2"	13'4"	KH293	52
2"	14'	KH2805	55
2"	15'	KH299	58
2"	16'	KH2806	62
2"	17'	KH3545	66
2"	18'	KH2807	70
2.5"	5'	KH276	31
2.5"	6'	KH2576	37
2.5"	6'8"	KH282	41
2.5"	7 '	KH2582	43
2.5"	8'	KH2541	50
2.5"	10'	KH288	62
2.5"	12'	KH366	74
2.5"	13'4"	KH294	82
2.5"	14'	KH2802	86
2.5"	15'	KH300	92
2.5"	16'	KH2803	99
2.5"	18'	KH2804	111
2.5"	20'	KH4813	123
4"	5'	KH279	58
4"	6'	KH4393	65
4"	6'8"	KH285	77
4"	7 '	KH2653	80
4"	8'	KH2447	92
4"	10'	KH291	115
4"	12'	KH369	138
4"	13'4"	KH297	153
4"	14'	KH2509	161
4"	15'	Kh303	172

Pipe, Extra Heavy (Schedule 80)

Description		Part	
I.D.	Length	Number	Weight
2"	5'	KH4400	26
2"	6'	KH1194	36
2"	6'8"	KH3791	38
2"	7 '	KH2229	43
2.5"	5'	KH1200	41
2.5"	6'8"	KH1201	55
2.5"	8'	KH2987	65
2.5"	10'	KH1202	82
2.5"	12'	KH1203	98
2.5"	13'4"	KH4390	109
2.5"	14'	KH5768	114
2.5"	15'	KH4713	122
4"	5'	KH1221	80
4"	6'8"	KH1222	106
4"	8'	KH1977	127
4"	10'	KH1223	159
4"	12'	KH1224	191
4"	13'4"	KH1225	212
4"	15'	KH1226	239
4"	16'	KH3614	254
4"	18'	KH5627	286

ROHN™ Products

Non Penetrating Roof Mounts

Products for a Growing World of Technology

Non-Penetrating Mounts

For Today's Communication Needs

Not only can ROHN provide you with towers and poles to meet the stringent demands of today's communication industry, we can also provide non-penetrating roof mounts needed to complete the project. ROHN offers many different models of non-pen mounts suitable for antennas up to 3 meters in diameter

ROHN Quality

ROHN non-penetrating mounts are all designed and engineered to handle the job of getting above ground interference. Each mount has been researched and developed to serve a specific purpose. With professionally engineered construction, you can be assured you're getting a virtually maintenance free product built to the highest standards. And because our mounts are Hot Dip Galvanized, our mounts won't rust.

Features

ROHN's Non-Penetrating Roof Mounts are designed for PCS, Wireless Cable, DBS, and UHF/VHF reception,etc. Features include:

- No penetration on roof surface
- Galvanized for corrosion protection
- Designed for concrete block ballast
- Varied mast heights are available
- Varied mast pipe O.D.'s are available
- Goes together quickly
- Minimum of bolted connections
- Engineering ballast tables available
- Optional roof pads or mats are available
- Some models are UPS shippable

Blank

25GBRM BILL OF MATERIAL

ITEM	QTY	PART NO	DESCRIPTION	DWG NO
1	1	KY2699	MAST SUB ASSEMBLY - 25G BRM	B990928
2	3	KY2698	ADJUSTABLE TOWER LEG STUB	A990147
3	6	230032	NUT 3/4 HEX FIN TO HDG (-10)	PURCHASED
4	1	BRM6X	GRAV MOUNT ANGLE PKG F/BRM6	D890722

BRM6X BILL OF MATERIAL

ITEM	QTY	PART NO	DESCRIPTION	DWG NO
5	4	KY1571	BRM6 BASE GRIT OUTER	B890740
6	4	KY1572	BRM6 BASE GRIT INNER	B890744
7	4	KY1573	BRM6 BASE DIAGONAL	B890738
8	1	KY1574	BRM6 BASE ANGLE CENTER	B890739
9	4	KY1575	BRM6 KNEE BRACE ANGLE	B890741
10	1	KY1577A	HARDWARE KIT	

KY1577A HARDWARE KIT BILL OF MATERIAL

ITEM	QTY	PART NO	DESCRIPTION	DWG NO
11	44	240085	NUT 1/2 HEX HDG	PURCHASED
12	44	210079G	BOLT 3/8 X 1	PURCHASED
13	16	KY1576	BASE CLIP 45° x 3/16 PLATE	B881269

REVISIONS				
ZONE	REV	DESCRIPTION	DATE	APPROVED

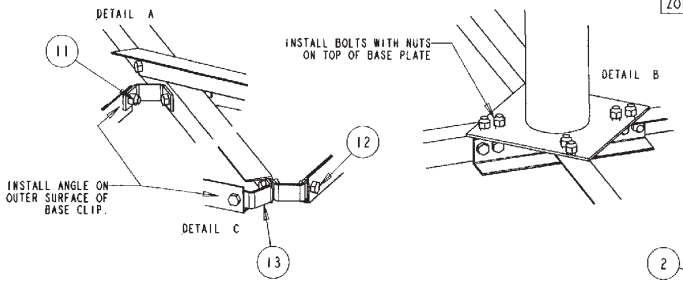

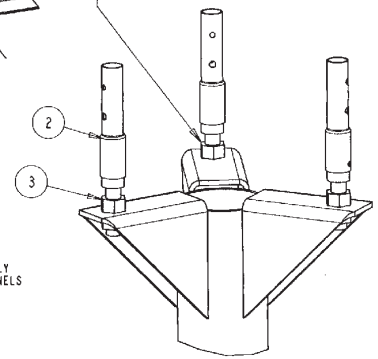

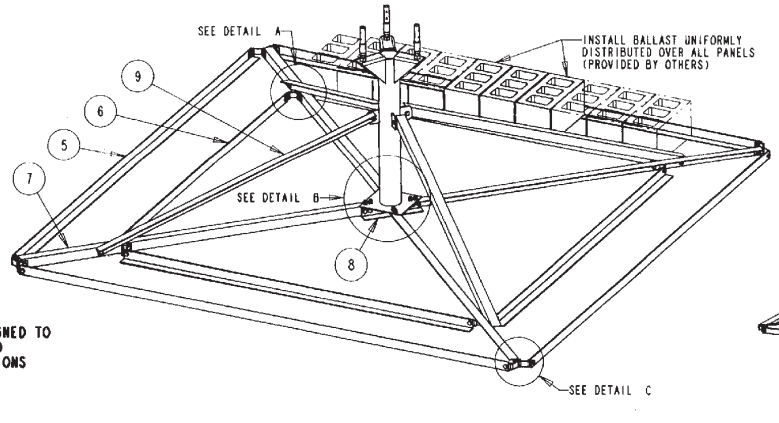

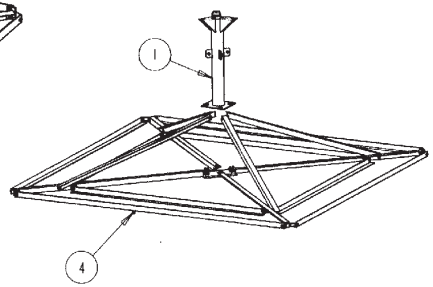

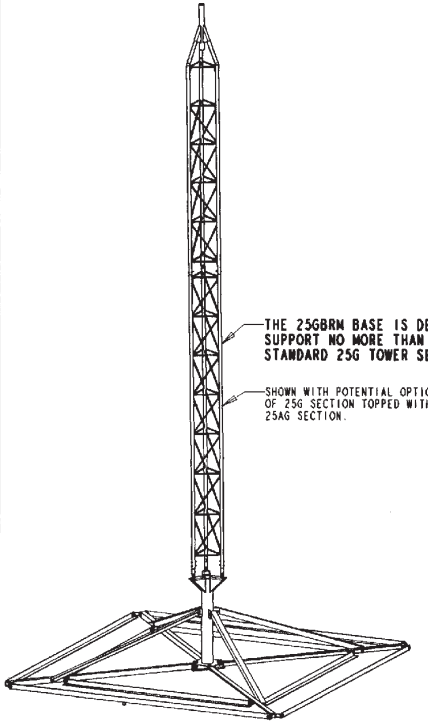

GENERAL NOTES:

1. PRIOR TO INSTALLATION, VERIFY THAT THE INSTALLATION, ROOF MATERIAL AND SUPORTING STRUCTURE HAVE BEEN INVESTIGATED AND FOUND CAPABLE OF WITHSTANDING ALL LOADS IMPOSED BY THE PROPOSED ANTENNA SYSTEM. CONFIRM THAT THE SUPPORTING SURFACES, ANCHORS, AND/OR SAFETY CABLES, IF REQUIRED, HAVE BEEN FOUND TO BE ADEQUATE TO RESIST THE REACTIONS FROM THE ANTENNA SYSTEM AND THAT THE INSTALLATION WILL BE IN CONFORMANCE WITH ALL APPLICABLE LOCAL, STATE AND FEDERAL REQUIREMENTS.
2. ALL ANTENNA INSTALLATIONS MUST BE GROUNDED TO MEET APPLICABLE CODES.
3. SAFETY CABLE KITS CONSISTING OF A 3/16 EHS SAFETY CABLE (3990 LBS ULTIMATE STRENGTH) WITH SIX CLAMPS TO SECURE MOUNT AND/OR BALLAST ARE AVAILABLE AS AN OPTION. USE THREE CABLE CLAMPS AT EACH END CONNECTION WITH THE U-BOLTS ON THE DEAD END OF THE CABLE.

SAFETY CABLE LENGTH	PART NUMBER
50FT	SCK50
100FT	SCK100
150FT	SCK150

4. ROOF PADS ARE AVAILABLE AS AN OPTION, PART NUMBER BRM6PAD
5. HIGH STRENGTH BOLTS ARE PROVIDED. NUT LOCKING IS DEPENDENT UPON INITIAL TENSION IN BOLT. INSPECT MOUNT, ANTENNA AND TIGHTNESS OF NUTS AT SIX MONTH MAXIMUM INTERVALS.
6. FOR ASSISTANCE IN DETERMINING BALLAST REQUIREMENTS REFER TO DRAWING A992094, 1-9.

DESCRIPTION: BALLAST ROOF MOUNT FOR 25G

ALL DIMENSIONS ARE GIVEN IN INCHES. TOLERANCES ARE AS GIVEN BELOW UNLESS NOTED OTHERWISE.
DECIMAL: ±0.063" ANGLES: ±2°

ROHN Products, Inc.

MATERIAL DESCRIPTION	RAW MATERIAL PART NO.	DATE 8/12/99	DRAWN BY DJL
		CHECKED BY DLB	APPROVED
		SCALE 0.025	ENG. FILE NO. 4372
BLANK SIZE	FINISH HDG	WEIGHT	SIZE C / PART NO. 25GBRM / DWG NO. C990126 / REV 0

25G BRM ALLOWABLE ANTENNA AREAS

EFFECTIVE PROJECTED AREA (EPA) (FT^2)	BALLAST (LBS)	ZERO VELOCITY LOAD (PSF)	Vs ONE SECTION (MPH) h = 12.4 FT	Vs TWO SECTIONS (MPH) h = 22.4 FT	Vmax AT CENTROID OF PROJECTED AREA (MPH) CENTROID OF ANTENNA EPA	
					h = 12.4 ft (1 sect)	h = 22.4 ft (2 sect)
2	500	5.0	131	96	111	65
	750	7.5	160	117	136	80
	1000	10.0	185	135	157	92
	1250	12.5	207	151	176	103
	1500	15.0	227	165	190	111
	1750	17.5	245	179	201	118
	2000	20.0	250	191	211	124
	2250	22.5	250	203	221	130
	2500	25.0	250	214	231	135
	2750	27.5	250	224	240	140
	3000	30.0	250	234	244	143
4	500	5.0	113	88	92	57
	750	7.5	138	107	112	70
	1000	10.0	159	124	130	81
	1250	12.5	178	139	145	91
	1500	15.0	195	152	157	98
	1750	17.5	211	164	166	104
	2000	20.0	225	175	174	109
	2250	22.5	239	186	182	114
	2500	25.0	250	196	190	119
	2750	27.5	250	206	198	124
	3000	30.0	250	215	201	126
6	500	5.0	100	82	80	52
	750	7.5	123	100	98	63
	1000	10.0	142	115	113	73
	1250	12.5	159	129	126	82
	1500	15.0	174	141	136	88
	1750	17.5	188	152	144	94
	2000	20.0	201	163	152	98
	2250	22.5	213	173	159	103
	2500	25.0	224	182	166	107
	2750	27.5	235	191	172	112
	3000	30.0	246	200	175	113

NO:	REV. DESCRIPTION:	DATE:	REV.BY:	CHKD. BY:	APPD. BY:

DRAWN BY: MSJ	DATE: 8/29/99	**ROHN Industries, Inc.**
CHECKED BY: HA	DATE: 8/30/99	
APP'D ENG: MSJ	DATE: 8/31/99	**25G BRM ALLOWABLE**
APP'D SALES:	DATE:	
FILE NUMBER: 41835DB		**ANTENNA AREAS**
DRAWING NUMBER:	A992094-1 OF 9	

25G BRM ALLOWABLE ANTENNA AREAS

EFFECTIVE PROJECTED AREA (EPA) (FT^2)	BALLAST (LBS)	ZERO VELOCITY LOAD (PSF)	Vs ONE SECTION (MPH) h = 12.4 FT	Vs TWO SECTIONS (MPH) h = 22.4 FT	Vmax AT CENTROID OF PROJECTED AREA (MPH) CENTROID OF ANTENNA EPA	
					h = 12.4 ft (1 sect)	h = 22.4 ft (2 sect)
8	500	5.0	91	76	72	48
	750	7.5	112	94	88	58
	1000	10.0	129	108	101	67
	1250	12.5	144	121	113	75
	1500	15.0	158	132	122	81
	1750	17.5	171	143	129	86
	2000	20.0	183	153	136	90
	2250	22.5	194	162	142	95
	2500	25.0	204	171	149	99
	2750	27.5	214	179	154	103
	3000	30.0	224	187	157	104
10	500	5.0	84	72	66	44
	750	7.5	103	89	80	54
	1000	10.0	119	102	93	63
	1250	12.5	133	114	104	70
	1500	15.0	146	125	112	76
	1750	17.5	158	135	118	80
	2000	20.0	169	145	124	84
	2250	22.5	179	153	130	88
	2500	25.0	189	162	136	92
	2750	27.5	198	169	141	95
	3000	30.0	207	177	144	97
12	500	5.0	79	69	61	42
	750	7.5	97	84	74	51
	1000	10.0	112	97	86	59
	1250	12.5	125	109	96	66
	1500	15.0	137	119	104	71
	1750	17.5	148	128	110	75
	2000	20.0	158	137	115	79
	2250	22.5	167	146	121	83
	2500	25.0	176	154	126	86
	2750	27.5	185	161	131	90
	3000	30.0	193	168	133	91

NO:	REV. DESCRIPTION:	DATE:	REV.BY:	CHKD. BY:	APPD. BY:

DRAWN BY: MSJ	DATE: 8/28/99	**ROHN Industries, Inc.**
CHECKED BY: HA	DATE: 8/30/99	
APP'D ENG: MSJ	DATE: 8/31/99	**25G BRM ALLOWABLE**
APP'D SALES:	DATE:	
FILE NUMBER: 41835DB		
DRAWING NUMBER:	A992094-2 OF 9	**ANTENNA AREAS**

25G BRM ALLOWABLE ANTENNA AREAS						
EFFECTIVE PROJECTED AREA (EPA) (FT^2)	BALLAST (LBS)	ZERO VELOCITY LOAD (PSF)	Vs ONE SECTION (MPH) h = 12.4 FT	Vs TWO SECTIONS (MPH) h = 22.4 FT	Vmax AT CENTROID OF PROJECTED AREA (MPH) CENTROID OF ANTENNA EPA	
					h = 12.4 ft (1 sect)	h = 22.4 ft (2 sect)
14	500	5.0	74	66	57	39
	750	7.5	91	80	70	48
	1000	10.0	105	93	80	56
	1250	12.5	117	104	90	62
	1500	15.0	129	114	97	67
	1750	17.5	139	123	103	71
	2000	20.0	149	131	108	75
	2250	22.5	158	139	113	78
	2500	25.0	166	147	118	81
	2750	27.5	174	154	123	85
	3000	30.0	182	161	125	86
16	500	5.0	70	63	54	37
	750	7.5	86	77	66	46
	1000	10.0	100	89	76	53
	1250	12.5	111	99	85	59
	1500	15.0	122	109	92	64
	1750	17.5	132	118	97	67
	2000	20.0	141	126	102	71
	2250	22.5	149	133	107	74
	2500	25.0	157	141	111	77
	2750	27.5	165	147	116	80
	3000	30.0	172	154	118	82
18	500	5.0	67	60	51	36
	750	7.5	82	74	62	44
	1000	10.0	95	86	72	50
	1250	12.5	106	96	81	56
	1500	15.0	116	105	87	61
	1750	17.5	126	113	92	64
	2000	20.0	134	121	97	68
	2250	22.5	142	128	101	71
	2500	25.0	150	135	106	74
	2750	27.5	157	142	110	77
	3000	30.0	164	148	112	78

NO:	↑REV. DESCRIPTION:	↑DATE:	↑REV.BY:	↑CHKD. BY:	↑APPD. BY:

DRAWN BY: MSJ	DATE: 8/28/99	**ROHN Industries, Inc.**
CHECKED BY: HA	DATE: 8/30/99	
APP'D ENG: MSJ	DATE: 8/31/99	**25G BRM ALLOWABLE**
APP'D SALES:	DATE:	
FILE NUMBER: 41835DB		
DRAWING NUMBER:	A992094-3 OF 9	**ANTENNA AREAS**

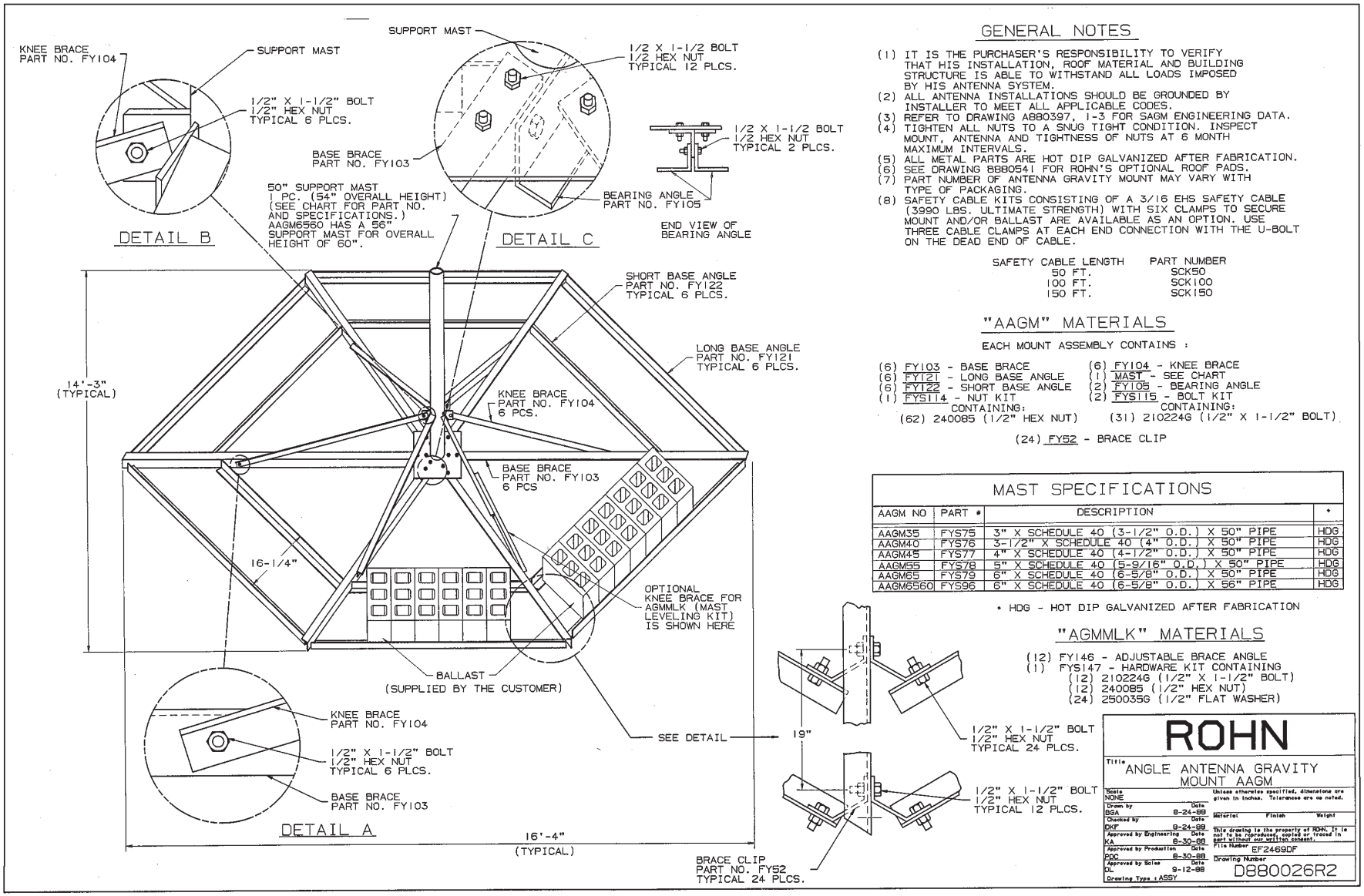

GENERAL NOTES

(1) IT IS THE PURCHASER'S RESPONSIBILITY TO VERIFY THAT HIS INSTALLATION, ROOF MATERIAL AND BUILDING STRUCTURE IS ABLE TO WITHSTAND ALL LOADS IMPOSED BY HIS ANTENNA SYSTEM.
(2) ALL ANTENNA INSTALLATIONS SHOULD BE GROUNDED BY INSTALLER TO MEET ALL APPLICABLE CODES.
(3) REFER TO DRAWING A880397, 1-3 FOR SAGM ENGINEERING DATA.
(4) TIGHTEN ALL NUTS TO A SNUG TIGHT CONDITION. INSPECT MOUNT, ANTENNA AND TIGHTNESS OF NUTS AT 6 MONTH MAXIMUM INTERVALS.
(5) ALL METAL PARTS ARE HOT DIP GALVANIZED AFTER FABRICATION.
(6) SEE DRAWING B880541 FOR ROHN'S OPTIONAL ROOF PADS.
(7) PART NUMBER OF ANTENNA GRAVITY MOUNT MAY VARY WITH TYPE OF PACKAGING.
(8) SAFETY CABLE KITS CONSISTING OF A 3/16 EHS SAFETY CABLE (3990 LBS. ULTIMATE STRENGTH) WITH SIX CLAMPS TO SECURE MOUNT AND/OR BALLAST ARE AVAILABLE AS AN OPTION. USE THREE CABLE CLAMPS AT EACH END CONNECTION WITH THE U-BOLT ON THE DEAD END OF CABLE.

SAFETY CABLE LENGTH	PART NUMBER
50 FT.	SCK50
100 FT.	SCK100
150 FT.	SCK150

"AAGM" MATERIALS

EACH MOUNT ASSEMBLY CONTAINS :

(6) FY103 - BASE BRACE
(6) FY121 - LONG BASE ANGLE
(6) FY122 - SHORT BASE ANGLE
(1) FYS114 - NUT KIT
CONTAINING:
(62) 240085 (1/2" HEX NUT)

(6) FY104 - KNEE BRACE
(1) MAST - SEE CHART
(2) FY105 - BEARING ANGLE
(2) FYS115 - BOLT KIT
CONTAINING:
(31) 210224G (1/2" X 1-1/2" BOLT)

(24) FY52 - BRACE CLIP

MAST SPECIFICATIONS

AAGM NO	PART #	DESCRIPTION	*
AAGM35	FYS75	3" X SCHEDULE 40 (3-1/2" O.D.) X 50" PIPE	HDG
AAGM40	FYS76	3-1/2" X SCHEDULE 40 (4" O.D.) X 50" PIPE	HDG
AAGM45	FYS77	4" X SCHEDULE 40 (4-1/2" O.D.) X 50" PIPE	HDG
AAGM55	FYS78	5" X SCHEDULE 40 (5-9/16" O.D.) X 50" PIPE	HDG
AAGM65	FYS79	6" X SCHEDULE 40 (6-5/8" O.D.) X 50" PIPE	HDG
AAGM6560	FYS96	6" X SCHEDULE 40 (6-5/8" O.D.) X 56" PIPE	HDG

* HDG - HOT DIP GALVANIZED AFTER FABRICATION

"AGMMLK" MATERIALS

(12) FY146 - ADJUSTABLE BRACE ANGLE
(1) FYS147 - HARDWARE KIT CONTAINING
(12) 210224G (1/2" X 1-1/2" BOLT)
(12) 240085 (1/2" HEX NUT)
(24) 250035G (1/2" FLAT WASHER)

ROHN

Title: ANGLE ANTENNA GRAVITY MOUNT AAGM

Scale: NONE	Unless otherwise specified, dimensions are given in inches. Tolerances are as noted.
Drawn by: BGA — Date: 8-24-88	Material / Finish / Weight
Checked by: DKF — Date: 8-24-88	This drawing is the property of ROHN. It is not to be reproduced, copied or traced in part without our written consent.
Approved by Engineering: KA — Date: 8-30-88	File Number: EF2469DF
Approved by Production: PDC — Date: 8-30-88	Drawing Number: D880026R2
Approved by Sales: DL — Date: 9-12-88	
Drawing Type: ASSY	

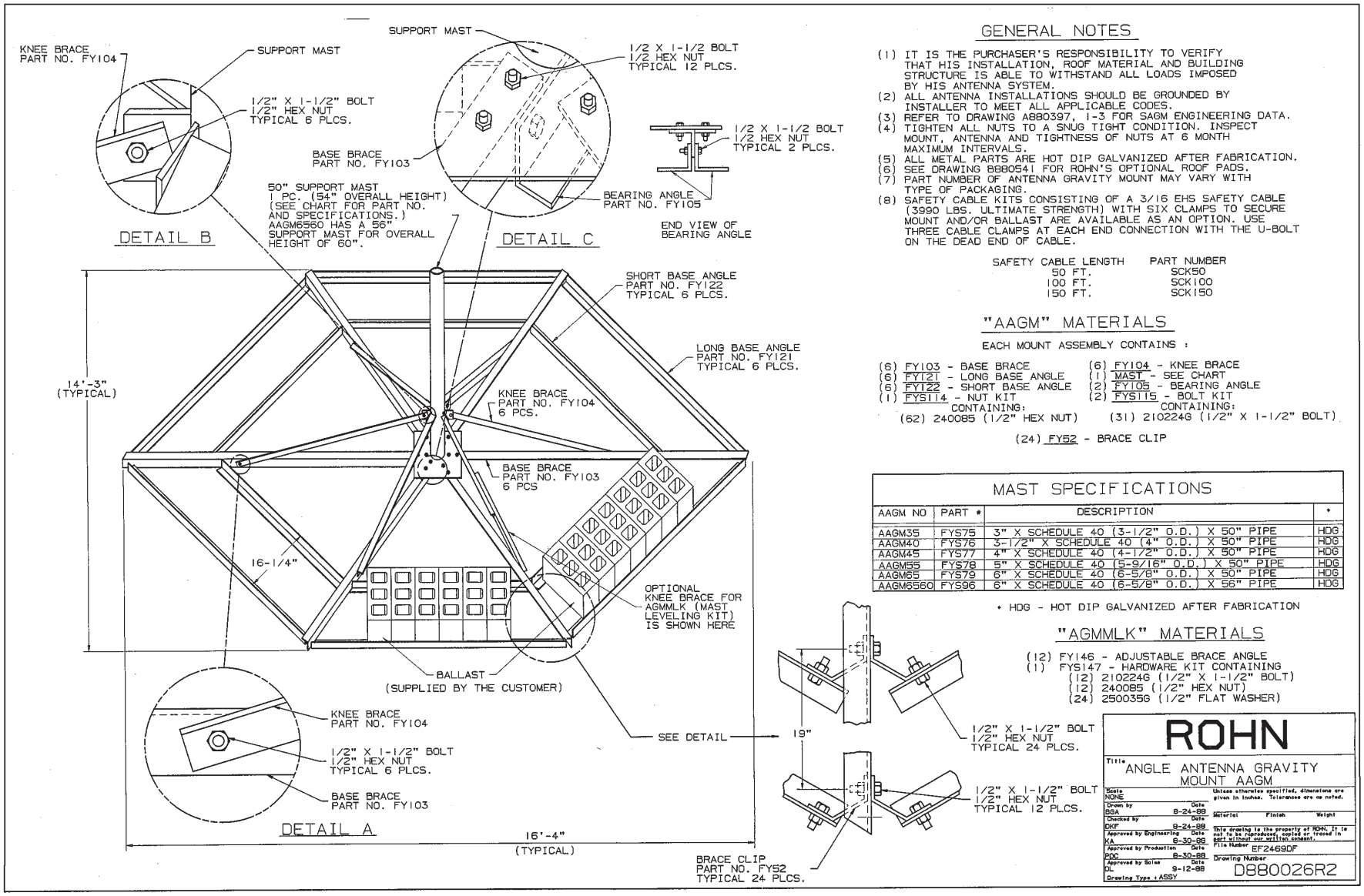

GENERAL NOTES

(1) IT IS THE PURCHASER'S RESPONSIBILITY TO VERIFY THAT HIS INSTALLATION, ROOF MATERIAL AND BUILDING STRUCTURE IS ABLE TO WITHSTAND ALL LOADS IMPOSED BY HIS ANTENNA SYSTEM.
(2) ALL ANTENNA INSTALLATIONS SHOULD BE GROUNDED BY INSTALLER TO MEET ALL APPLICABLE CODES.
(3) REFER TO DRAWING A880397, 1-3 FOR SAGM ENGINEERING DATA.
(4) TIGHTEN ALL NUTS TO A SNUG TIGHT CONDITION. INSPECT MOUNT, ANTENNA AND TIGHTNESS OF NUTS AT 6 MONTH MAXIMUM INTERVALS.
(5) ALL METAL PARTS ARE HOT DIP GALVANIZED AFTER FABRICATION.
(6) SEE DRAWING B880541 FOR ROHN'S OPTIONAL ROOF PADS.
(7) PART NUMBER OF ANTENNA GRAVITY MOUNT MAY VARY WITH TYPE OF PACKAGING.
(8) SAFETY CABLE KITS CONSISTING OF A 3/16 EHS SAFETY CABLE (3990 LBS. ULTIMATE STRENGTH) WITH SIX CLAMPS TO SECURE MOUNT AND/OR BALLAST ARE AVAILABLE AS AN OPTION. USE THREE CABLE CLAMPS AT EACH END CONNECTION WITH THE U-BOLT ON THE DEAD END OF CABLE.

SAFETY CABLE LENGTH	PART NUMBER
50 FT.	SCK50
100 FT.	SCK100
150 FT.	SCK150

"AAGM" MATERIALS

EACH MOUNT ASSEMBLY CONTAINS :

(6) FY103 - BASE BRACE
(6) FY121 - LONG BASE ANGLE
(6) FY122 - SHORT BASE ANGLE
(1) FYS114 - NUT KIT
CONTAINING:
(62) 240085 (1/2" HEX NUT)

(6) FY104 - KNEE BRACE
(1) MAST - SEE CHART
(2) FY105 - BEARING ANGLE
(2) FYS115 - BOLT KIT
CONTAINING:
(31) 210224G (1/2" X 1-1/2" BOLT)

(24) FY52 - BRACE CLIP

MAST SPECIFICATIONS

AAGM NO	PART #	DESCRIPTION	*
AAGM35	FYS75	3" X SCHEDULE 40 (3-1/2" O.D.) X 50" PIPE	HDG
AAGM40	FYS76	3-1/2" X SCHEDULE 40 (4" O.D.) X 50" PIPE	HDG
AAGM45	FYS77	4" X SCHEDULE 40 (4-1/2" O.D.) X 50" PIPE	HDG
AAGM55	FYS78	5" X SCHEDULE 40 (5-9/16" O.D.) X 50" PIPE	HDG
AAGM65	FYS79	6" X SCHEDULE 40 (6-5/8" O.D.) X 50" PIPE	HDG
AAGM6560	FYS96	6" X SCHEDULE 40 (6-5/8" O.D.) X 56" PIPE	HDG

* HDG - HOT DIP GALVANIZED AFTER FABRICATION

"AGMMLK" MATERIALS

(12) FY146 - ADJUSTABLE BRACE ANGLE
(1) FYS147 - HARDWARE KIT CONTAINING
(12) 210224G (1/2" X 1-1/2" BOLT)
(12) 240085 (1/2" HEX NUT)
(24) 250035G (1/2" FLAT WASHER)

ROHN

Title: ANGLE ANTENNA GRAVITY MOUNT AAGM

Scale: NONE		Unless otherwise specified, dimensions are given in inches. Tolerances are as noted.
Drawn by: BGA	Date: 8-24-88	Material / Finish / Weight
Checked by: DKF	Date: 8-24-88	This drawing is the property of ROHN. It is not to be reproduced, copied or traced in part without our written consent.
Approved by Engineering: KA	Date: 8-30-88	File Number: EF2469DF
Approved by Production: PDC	Date: 8-30-88	Drawing Number: D880026R2
Approved by Sales: DL	Date: 9-12-88	
Drawing Type: ASSY		

Form No. 95-2806M

ANGLE ANTENNA GRAVITY MOUNT

Ballast Requirements Chart

Antenna Diameter	Ballast (pounds)	Zero Velocity Roof Load	Max. V (MPH)	Wind Speeds Resulting in Sliding Coefficient of Friction = .50		
				EL = 0°	EL = 20°	EL = 40°
4 Ft. (1.2M)	1000	6	135	91	93	101
	1500	9	164	111	114	123
	2000	12	187	128	132	142
	2500	15	207	143	147	159
	3000	18	225	157	161	174
	3500	21	240	170	174	188
	4000	24	250	181	186	201
	5000	30	250	203	208	225
	6000	36	250	222	228	246
6 Ft. (1.8M)	1000	6	90	60	62	67
	1500	9	109	74	76	82
	2000	12	125	85	88	95
	2500	15	138	96	98	106
	3000	18	150	105	108	116
	3500	21	160	113	116	125
	4000	24	165	121	124	134
	5000	30	165	135	139	150
	6000	36	165	148	152	164
8 Ft. (2.4M)	1000	6	68	45	47	50
	1500	9	82	56	57	62
	2000	12	94	64	66	71
	2500	15	104	72	74	79
	3000	18	112	79	81	87
	3500	21	120	85	87	94
	4000	24	125	91	93	101
	5000	30	125	101	104	112
	6000	36	125	111	114	123
10 Ft. (3.0M)	1000	6	46	31	33	40
	1500	9	56	38	40	49
	2000	12	64	44	46	57
	2500	15	71	49	52	64
	3000	18	77	54	57	70
	3500	21	82	58	61	75
	4000	24	85	62	65	80
	5000	30	85	69	73	85
	6000	36	85	76	80	85

Information stated herein is based upon Engineering Drawing A880397R1 to be used as a guide in calculating the required ballast amounts for the AAGM Antenna Gravity Mount series. This infomation is the property of UNR-ROHN. It is not to be reproduced, copied or traced in whole or in part without our written consent.

1. Ballast requirements are provided to assist consumers in determining the applicability of the AAGM for an antenna installation. Refer to UNR-ROHN Engineering Report 870101 dated July 28, 1988 for test data used to generate the ballast requirements indicated. The ballast data should not be relied upon without competent local professional examination and verification of its accuracy and suitability for a specific site or application.

2. Ballast requirements are based on typical ANSI/EIA-222-D paraboloid antennas supported 12 inches from the vertex of the antenna on a 54 inch long mounting pipe on a flat supporting surface. Specific antenna types may require more stringent wind loads and ballast requirements and must be investigated for each installation. The load carrying requirements of the supporting surface, the mast, the antenna and the antenna's connection to the mast must also be investigated for each installation.

3. The ballast weights indicated are net ballast weights, and must be uniformly distributed over all panels. The effective weight of the gravity mount and antenna may be deducted from the ballast weights indicated to determine ballast pan weight requirements. The effective weight of the gravity mount and antenna may be calculated by subtracting the uplift component of wind load from the actual weight of the gravity mount and antenna. (Worst case uplift wind load component = .000910 (A) (V) 2 at an 80° elevation angle).

4. The zero velocity roof loads shown are equal to the ballast weights indicated divided by the total area enclosed by the perimeters of the gravity mounts (i.e. an area greater than the ballast pan contact area). If effective gravity mount and antenna weights are considered when determining ballast pan weight requirements, the zero velocity roof loads will be higher than those indicated due to the absence of the uplift component of wind load. The zero velocity roof load, in all cases, equals the weight of the gravity mount, antenna and ballast weight divided by the total area enclosed by the perimeter of the gravity mount (166 sq. ft.). Total roof loads under wind loading conditions would include wind forces and moments, weight of ballast, gravity mount, antenna and roof pads. (Worst case download component = .003374 (A) (V) 2 at a 60° elevation angle.

5. Maximum wind velocities are based on a minimum 1.5 factor of safety against structural failure and overturning for the worst case antenna elevation angle. The wind speeds which may occur at an installation must be determined on an individual site basis.

6. The tabulated wind speeds resulting in sliding are based on a factor of safety (F.S.) equal to 1.0 and a coefficient of friction (μ) equal to .50. Wind speeds are given for 0, 20, and 40 degree antenna elevation angles. The .50 coeffficient of friction value was determined from full-scale load tests using wet UNR-ROHN roof pads on wet troweled finished concrete. The appropriate coefficient of friction to determine wind speeds resulting in sliding must be determined on an individual site basis.

   Wind speeds resulting in sliding for other factors of safety or for other coefficients of friction may be found by multiplying the tabulated wind speeds resulting in sliding by the following factor:

$$\frac{\mu}{.5\ (F.S.)}$$

μ = Coefficient of Friction
F.S. = Factor of Safety

7. UNR-ROHN recommends that ballast material always be placed prior to mounting the antenna and that roof pads and gravity mount be secured to prevent hazards from occurring under extreme wind loading conditions.

8. Roof pads are recommended to prevent damage to roof membranes. Pads should be placed under all ballast rails and under the mast pipe. When roof pads are utilized, the minimum coefficient of friction between ballast rails and roof pad or between the roof pads and supporting surface must be used to calculate the wind speeds resulting in sliding.

9. When adhesives, sealants, or pads are utilized, they must be compatible with the supporting surface. They must also be durable and have adequate strength. Precautions should also be taken to ensure that damage to the supporting surface will not occur upon wind loading.

10. Adhesives and sealants must be capable of resisting shear, otherwise they may act as a lubricant and decrease the effective coefficient of friction between the ballast rails and the supporting surface. Windward ballast rails may partially lift off at wind speeds well below the maximum wind speeds indicated. Adhesives or sealants may be disturbed under such circumstances and may require repairing after major wind loading events.

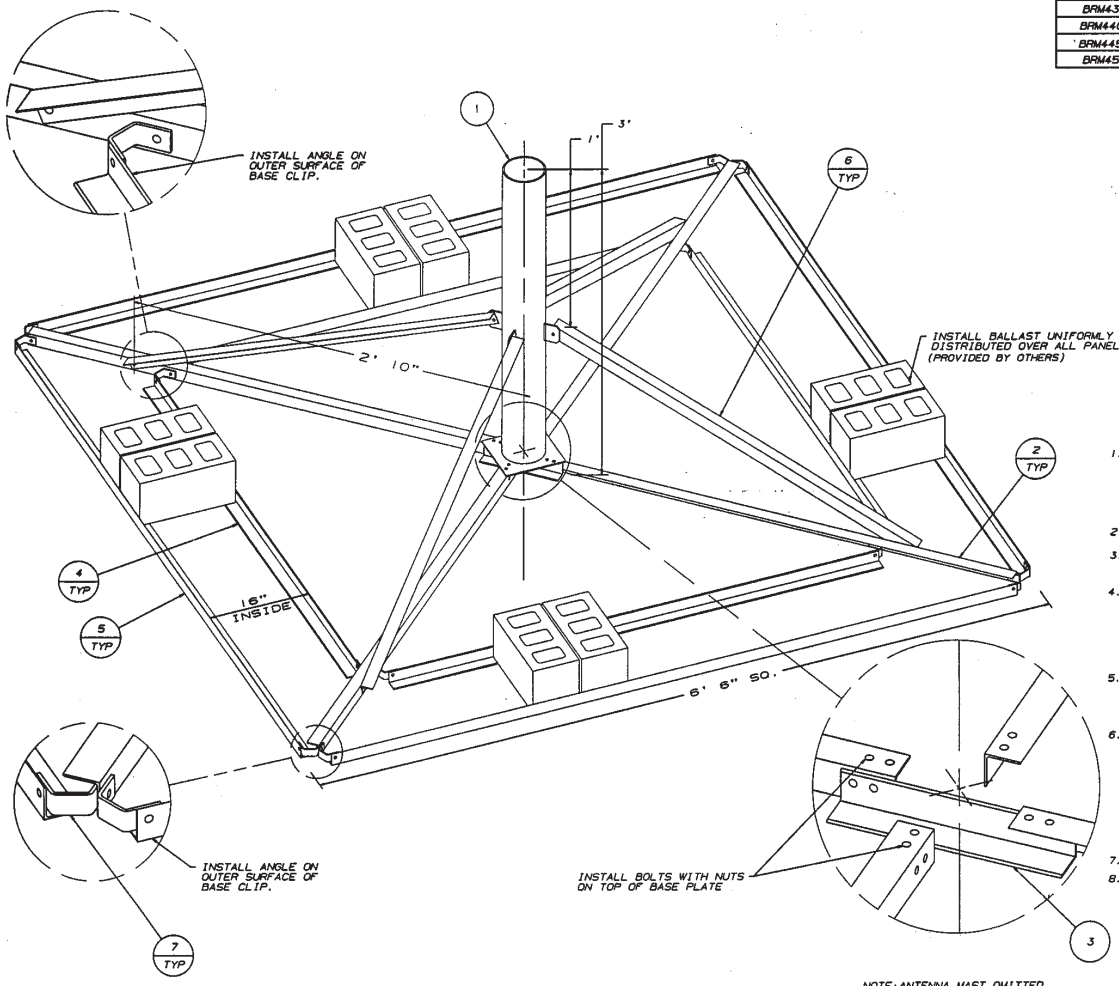

BRM4 NO.	MAST SPECIFICATIONS		
	WT. LBS.	PART NO.	DESCRIPTION
BRM425	112.9	KY1590	BRM4 WITH 2 STD. PIPE(2-3/8 OD) X 34-1/4"
BRM430	118.9	KY1592	BRM4 WITH 2-1/2 STD. PIPE (2-7/8 OD) X 34-1/4"
BRM435	124	KY1594	BRM4 WITH 3 STD. PIPE(3-1/2 OD) X 34-1/4"
BRM440	128.4	KY1596	BRM4 WITH 3-1/2 STD. PIPE (4 OD) X 34-1/4"
BRM445	133.1	KY1598	BRM4 WITH 4 STD. PIPE(4-1/2 OD) X 34-1/4"
BRM455	144	KY1600	BRM4 WITH 5 STD. PIPE(5-9/16 OD) X 34-1/4"

BRM4 BILL OF MATERIAL

ITEM	QUAN.	PART NO.	DESCRIPTION	DWG. NO.
1	1	SEE CHART	ANTENNA MAST SUPPORT	C981163
2	4	KY1602	BASE DIAGONAL	B981268
3	1	KY1601	BASE ANGLE CENTER	B981266
4	4	KY1603	BASE GIRT INNER	B981270
5	4	KY1605	BASE GIRT OUTER	B981271
6	4	KY1604	KNEE BRACE ANGLE	B981267
7	1	KY1577A	HARDWARE KIT	N/A

KY1577A HARDWARE KIT BILL OF MATERIAL

ITEM	QUAN.	PART NO.	DESCRIPTION	DWG. NO.
8	16	KY1576	BASE CLIPS	B981269
9	44	210079G	BOLT 3/8 X 1	N/A
10	44	230024	NUT 3/8 DIA.	N/A

NOTE: ALL PARTS HOT DIP GALVANIZED

GENERAL NOTES

1. PRIOR TO INSTALLATION VERIFY THAT THE INSTALLATION, ROOF MATERIAL AND SUPPORTING STRUCTURE HAVE BEEN INVESTIGATED AND FOUND CAPABLE OF WITHSTANDING ALL LOADS IMPOSED BY THE PROPOSED ANTENNA SYSTEM. CONFIRM THAT THE SUPPORTING SURFACES, ANCHORS, AND/OR SAFETY CABLES, IF REQUIRED, HAVE BEEN FOUND TO BE ADEQUATE TO RESIST THE REACTIONS FROM THE ANTENNA SYSTEM AND THAT THE INSTALLATION WILL BE IN CONFORMANCE WITH ALL APPLICABLE LOCAL, STATE AND FEDERAL REQUIREMENTS.
2. ALL ANTENNA INSTALLATIONS MUST BE GROUNDED TO MEET APPLICABLE CODES.
3. ADEQUATE BALLAST MATERIAL MUST BE DETERMINED AND PROVIDED BY OTHERS TO PREVENT OVERTURNING AND SLIDING AT THE DESIGN WIND LOAD. SEE DRAWING A981104 FOR BALLAST AND ALLOWABLE ANTENNA AREAS INFORMATION.
4. ROHN RECOMMENDS THAT BALLAST MATERIAL ALWAYS BE PLACED PRIOR TO MOUNTING THE ANTENNA AND THAT ROOF PADS AND MOUNT BE SECURED TO PREVENT HAZARDS FROM OCCURRING UNDER EXTREME WIND LOADING CONDITIONS. PRECAUTIONS SHOULD ALWAYS BE TAKEN TO PREVENT THE INADVERTENT REMOVAL OF BALLAST MATERIAL AFTER INSTALLATION AND TO INSURE THAT BALLAST MATERIAL IS FULLY SUPPORTED BY THE BALLAST SUPPORT ANGLES (REQUIRED FOR BALLAST TO BE EFFECTIVE IN RESISTING OVERTURNING AND SLIDING).
5. WHEN ADHESIVES, SEALANTS OR PADS ARE UTILIZED, THEY MUST BE COMPATIBLE WITH THE SUPPORTING SURFACE. THEY MUST ALSO BE DURABLE AND HAVE ADEQUATE STRENGTH. PRECAUTIONS SHOULD ALSO BE TAKEN TO INSURE THAT DAMAGE TO THE SUPPORTING SURFACE WILL NOT OCCUR UPON WIND LOADING.
6. SAFETY CABLE KITS CONSISTING OF A 3/16 EHS SAFETY CABLE (3990 LBS. ULTIMATE STRENGTH) WITH SIX CLAMPS TO SECURE MOUNT AND/OR BALLAST ARE AVAILABLE AS AN OPTION. USE THREE CABLE CLAMPS AT EACH END CONNECTION WITH THE U-BOLT ON THE DEAD END OF THE CABLE.

SAFETY CABLE LENGTH	PART NUMBER
50 FT	SCK50
100 FT	SCK100
150 FT	SCK150

7. ROOF PADS AND MATS ARE AVAILABLE AS AN OPTION, PART NUMBERS: BRM4PAD & BRM4MAT
8. HIGH STRENGTH BOLTS ARE PROVIDED. NUT LOCKING IS DEPENDENT UPON INITIAL TENSION IN BOLT. INSPECT MOUNT, ANTENNA AND TIGHTNESS OF NUTS AT SIX MONTH MAXIMUM INTERVALS.

No. & Revision Description	& Date	& Rev. By	& Chk. By	& Appr. By
R2 REVISED NOTE 3 & 7	5/1/99	SCP		
R1 P/N 230024 WAS 210019	12/6/99	WDU	WAN	TS

ROHN

Scale: NONE	By	Date	Title:
Drawn:	WDU	2/15/99	BRM4 BALLAST ROOF MOUNT
Checked:	WAN	11/30/99	
App. Eng.:	TS	12/1/99	
App. Sales:	DL	12/1/99	ENG. FILE: 377610L DRAWING NO.: D890728R2

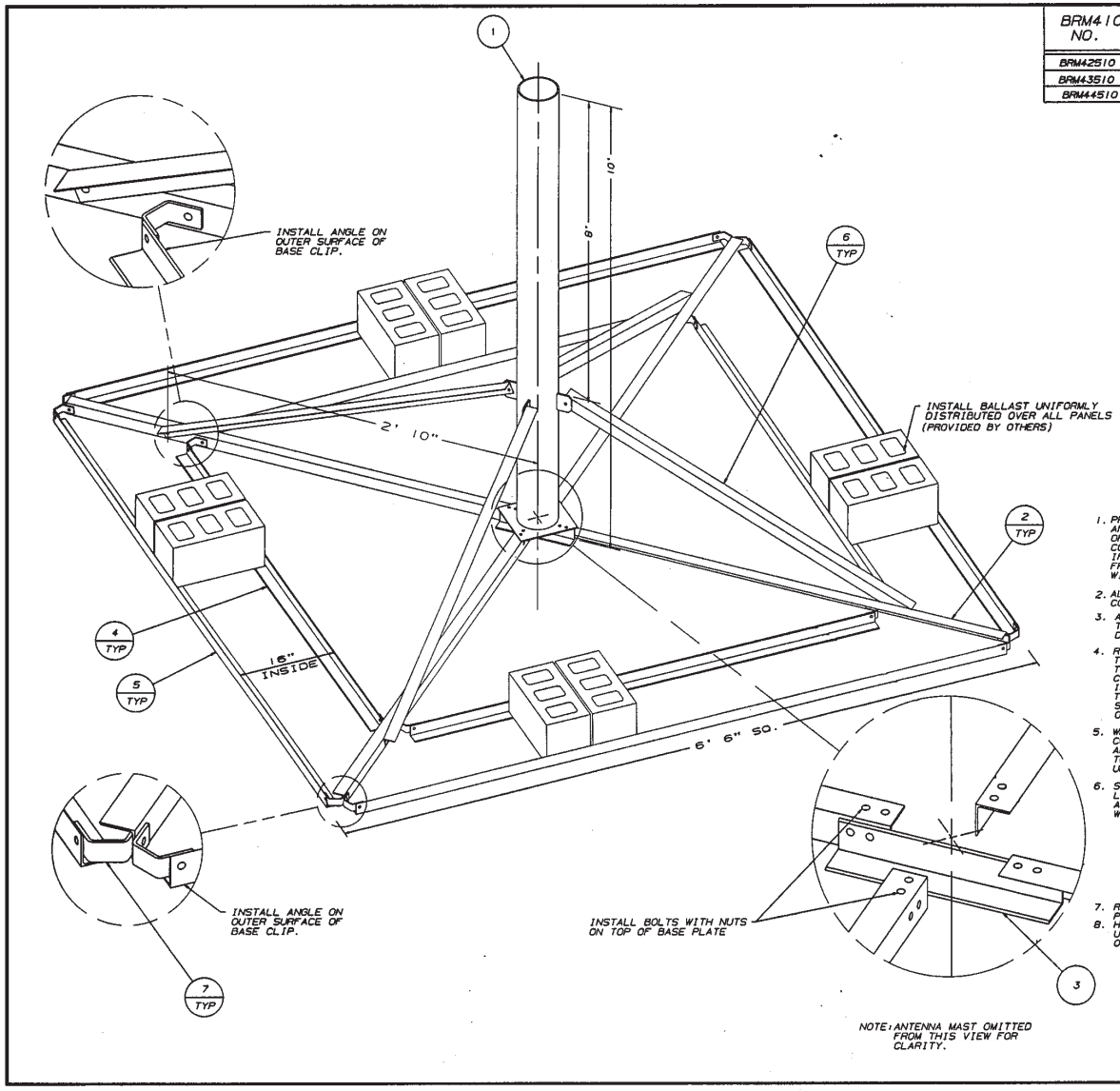

BRM410 NO.	MAST SPECIFICATIONS		
	WT. LBS.	PART NO.	DESCRIPTION
BRM42510	140	KY2061	BRM410 WITH 2 STD. PIPE(2-3/8 OD)
BRM43510	180.2	KY2063	BRM410 WITH 3 STD. PIPE(3-1/2 OD)
BRM44510	213.2	KY2065	BRM410 WITH 4 STD. PIPE(4-1/2 OD)

BRM410 BILL OF MATERIAL

ITEM	QUAN.	PART NO.	DESCRIPTION	DWG. NO.
1	1	SEE CHART	ANTENNA MAST SUPPORT	C950849
2	4	KY1602	BASE DIAGONAL	8881268
3	1	KY1601	BASE ANGLE CENTER	8881266
4	4	KY1603	BASE GIRT INNER	8881270
5	4	KY1605	BASE GIRT OUTER	8881271
6	4	KY1604	KNEE BRACE ANGLE	8881267
7	1	KY1577A	HARDWARE KIT	N/A

KY1577A HARDWARE KIT BILL OF MATERIAL

ITEM	QUAN.	PART NO.	DESCRIPTION	DWG. NO.
8	16	KY1576	BASE CLIPS	8881269
9	44	2100799	BOLT 3/8 X 1	N/A
10	44	230024	NUT 3/8 DIA.	N/A

NOTE: ALL PARTS HOT DIP GALVANIZED

GENERAL NOTES

1. PRIOR TO INSTALLATION VERIFY THAT THE INSTALLATION, ROOF MATERIAL AND SUPPORTING STRUCTURE HAVE BEEN INVESTIGATED AND FOUND CAPABLE OF WITHSTANDING ALL LOADS IMPOSED BY THE PROPOSED ANTENNA SYSTEM. CONFIRM THAT THE SUPPORTING SURFACES, ANCHORS, AND/OR SAFETY CABLES, IF REQUIRED, HAVE BEEN FOUND TO BE ADEQUATE TO RESIST THE REACTIONS FROM THE ANTENNA SYSTEM AND THAT THE INSTALLATION WILL BE IN CONFORMANCE WITH ALL APPLICABLE LOCAL, STATE AND FEDERAL REQUIREMENTS.
2. ALL ANTENNA INSTALLATIONS MUST BE GROUNDED TO MEET APPLICABLE CODES.
3. ADEQUATE BALLAST MATERIAL MUST BE DETERMINED AND PROVIDED BY OTHERS TO PREVENT OVERTURNING AND SLIDING AT THE DESIGN WIND LOAD. SEE DRAWING A981104 FOR BALLAST AND ALLOWABLE ANTENNA AREAS INFORMATION.
4. ROHN RECOMMENDS THAT BALLAST MATERIAL ALWAYS BE PLACED PRIOR TO MOUNTING THE ANTENNA AND THAT ROOF PADS AND MOUNT BE SECURED TO PREVENT HAZARDS FROM OCCURRING UNDER EXTREME WIND LOADING CONDITIONS. PRECAUTIONS SHOULD ALWAYS BE TAKEN TO PREVENT THE INADVERTENT REMOVAL OF BALLAST MATERIAL AFTER INSTALLATION AND TO INSURE THAT BALLAST MATERIAL IS FULLY SUPPORTED BY THE BALLAST SUPPORT ANGLES (REQUIRED FOR BALLAST TO BE EFFECTIVE IN RESISTING OVERTURNING AND SLIDING).
5. WHEN ADHESIVES, SEALANTS OR PADS ARE UTILIZED, THEY MUST BE COMPATIBLE WITH THE SUPPORTING SURFACE. THEY MUST ALSO BE DURABLE AND HAVE ADEQUATE STRENGTH. PRECAUTIONS SHOULD ALSO BE TAKEN TO INSURE THAT DAMAGE TO THE SUPPORTING SURFACE WILL NOT OCCUR UPON WIND LOADING.
6. SAFETY CABLE KITS CONSISTING OF A 3/16 EHS SAFETY CABLE (3990 LBS. ULTIMATE STRENGTH) WITH SIX CLAMPS TO SECURE MOUNT AND/OR BALLAST ARE AVAILABLE AS AN OPTION. USE THREE CABLE CLAMPS AT EACH END CONNECTION WITH THE U-BOLT ON THE DEAD END OF THE CABLE.

SAFETY CABLE LENGTH	PART NUMBER
50 FT	SCK50
100 FT	SCK100
150 FT	SCK150

7. ROOF PADS AND MATS ARE AVAILABLE AS AN OPTION. PART NUMBERS: BRM4PAD & BRM4MAT.
8. HIGH STRENGTH BOLTS ARE PROVIDED. NUT LOCKING IS DEPENDENT UPON INITIAL TENSION IN BOLT. INSPECT MOUNT, ANTENNA AND TIGHTNESS OF NUTS AT SIX MONTH MAXIMUM INTERVALS.

No. & Revision Description	& Date	& Rev By	& Chk By	& Appd By
R2 REVISED NOTE 3	9/1/98	SDP	MSJ	
R1 REMOVED PART NUMBERS & ADDED BRM4MAT	9/08/98	LLK	MSJ	TS

ROHN

Scale: NONE	By	Date	Title: BRM410 BALLAST ROOF MOUNT
Drawn:	WDJ	3/27/95	
Checked:	WAH	3/28/95	
App. Eng.:	TS	3/28/95	
App. Sales:	PM	3/31/95	ENG. FILE: 377610L DRAWING NO.: 0950764R2

BRM4 AND BRM410 ALLOWABLE ANTENNA AREAS

EFFECTIVE PROJECTED AREA (E.P.A.) (FT^2)	BALLAST (LBS)	ZERO VELOCITY LOAD (PSF)	Vs (MPH)	Vmax AT CENTROID OF PROJECTED AREA, (MPH)							
				h=2 FT	h=3 FT	h=4 FT	h=5 FT	h=6 FT	h=7 FT	h=8 FT	h=9 FT
2	300	7.1	171	242	198	171	153	140	130	121	114
	500	11.8	221	313	256	221	198	181	167	157	148
	700	16.6	261	370	302	262	234	214	198	185	175
	900	21.3	296	416	340	294	263	240	223	208	196
	1100	26.0	328	448	366	317	284	259	240	224	211
	1300	30.8	356	478	391	338	302	276	256	239	225
	1500	35.5	383	506	414	358	320	292	271	253	239
	1700	40.2	407	533	435	377	337	308	285	267	251
	1900	45.0	431	558	456	395	353	322	299	279	263
	2100	49.7	453	583	476	412	369	336	312	291	275
	2300	54.4	474	604	493	427	382	349	323	302	285
4	300	7.1	121	171	140	121	108	99	92	86	81
	500	11.8	156	221	181	157	140	128	118	111	104
	700	16.6	185	262	214	185	166	151	140	131	123
	900	21.3	210	294	240	208	186	170	157	147	139
	1100	26.0	232	317	259	224	201	183	169	159	149
	1300	30.8	252	338	276	239	214	195	181	169	159
	1500	35.5	271	358	292	253	226	207	191	179	169
	1700	40.2	288	377	308	267	238	218	201	188	178
	1900	45.0	305	395	322	279	250	228	211	197	186
	2100	49.7	320	412	336	291	261	238	220	206	194
	2300	54.4	335	427	349	302	270	247	228	213	201
6	300	7.1	99	140	114	99	89	81	75	70	66
	500	11.8	128	181	148	128	114	104	97	90	85
	700	16.6	151	214	175	151	135	123	114	107	101
	900	21.3	171	240	196	170	152	139	128	120	113
	1100	26.0	189	259	211	183	164	149	138	129	122
	1300	30.8	206	276	225	195	175	159	148	138	130
	1500	35.5	221	292	239	207	185	169	156	146	138
	1700	40.2	235	308	251	218	195	178	165	154	145
	1900	45.0	249	322	263	228	204	186	172	161	152
	2100	49.7	261	336	275	238	213	194	180	168	159
	2300	54.4	274	349	285	247	220	201	186	174	164
8	300	7.1	86	121	99	86	77	70	65	61	57
	500	11.8	110	157	128	111	99	90	84	78	74
	700	16.6	131	185	151	131	117	107	99	93	87
	900	21.3	148	208	170	147	132	120	111	104	98
	1100	26.0	164	224	183	159	142	129	120	112	106
	1300	30.8	178	239	195	169	151	138	128	120	113
	1500	35.5	191	253	207	179	160	146	135	127	119
	1700	40.2	204	267	218	188	169	154	142	133	126
	1900	45.0	215	279	228	197	177	161	149	140	132
	2100	49.7	226	291	238	206	184	168	156	146	137
	2300	54.4	237	302	247	213	191	174	161	151	142

NO:	▲ REVISION DESCRIPTION:	▲ DATE:	REV.BY:	▲ CHKD.BY:	▲ APPD.BY:

DRAWN BY: MSJ	DATE: 4/30/98	ROHN
CHECKED BY: HA	DATE: 4/30/98	BRM4 AND BRM410 ALLOWABLE
APP'D ENG: MSJ	DATE: 5/1/98	
APP'D. SALES DL	DATE: 5/4/98	ANTENNA AREAS
FILE NUMBER: 37761DL		
DRAWING NUMBER: A981104-1 OF 9		

BRM4 AND BRM410 ALLOWABLE ANTENNA AREAS

EFFECTIVE PROJECTED AREA (E.P.A.) (FT²)	BALLAST (LBS)	ZERO VELOCITY LOAD (PSF)	Vs (MPH)	Vmax AT CENTROID OF PROJECTED AREA, (MPH)							
				h=2 FT	h=3 FT	h=4 FT	h=5 FT	h=6 FT	h=7 FT	h=8 FT	h=9 FT
10	300	7.1	77	108	89	77	69	63	58	54	51
	500	11.8	99	140	114	99	89	81	75	70	66
	700	16.6	117	166	135	117	105	96	89	83	78
	900	21.3	133	186	152	132	118	107	100	93	88
	1100	26.0	147	201	164	142	127	116	107	100	95
	1300	30.8	159	214	175	151	135	123	114	107	101
	1500	35.5	171	226	185	160	143	131	121	113	107
	1700	40.2	182	238	195	169	151	138	127	119	112
	1900	45.0	193	250	204	177	158	144	134	125	118
	2100	49.7	203	261	213	184	165	150	139	130	123
	2300	54.4	212	270	220	191	171	156	144	135	127
12	300	7.1	70	99	81	70	63	57	53	49	47
	500	11.8	90	128	104	90	81	74	68	64	60
	700	16.6	107	151	123	107	96	87	81	76	71
	900	21.3	121	170	139	120	107	98	91	85	80
	1100	26.0	134	183	149	129	116	106	98	92	86
	1300	30.8	145	195	159	138	123	113	104	98	92
	1500	35.5	156	207	169	146	131	119	111	103	97
	1700	40.2	166	218	178	154	138	126	116	109	103
	1900	45.0	176	228	186	161	144	132	122	114	107
	2100	49.7	185	238	194	168	150	137	127	119	112
	2300	54.4	193	247	201	174	156	142	132	123	116
14	300	7.1	65	92	75	65	58	53	49	46	43
	500	11.8	84	118	97	84	75	68	63	59	56
	700	16.6	99	140	114	99	89	81	75	70	66
	900	21.3	112	157	128	111	100	91	84	79	74
	1100	26.0	124	169	138	120	107	98	91	85	80
	1300	30.8	135	181	148	128	114	104	97	90	85
	1500	35.5	145	191	156	135	121	111	102	96	90
	1700	40.2	154	201	165	142	127	116	108	101	95
	1900	45.0	163	211	172	149	134	122	113	106	100
	2100	49.7	171	220	180	156	139	127	118	110	104
	2300	54.4	179	228	186	161	144	132	122	114	108
16	300	7.1	61	86	70	61	54	49	46	43	40
	500	11.8	78	111	90	78	70	64	59	55	52
	700	16.6	92	131	107	93	83	76	70	65	62
	900	21.3	105	147	120	104	93	85	79	74	69
	1100	26.0	116	159	129	112	100	92	85	79	75
	1300	30.8	126	169	138	120	107	98	90	85	80
	1500	35.5	135	179	146	127	113	103	96	90	84
	1700	40.2	144	188	154	133	119	109	101	94	89
	1900	45.0	152	197	161	140	125	114	106	99	93
	2100	49.7	160	206	168	146	130	119	110	103	97
	2300	54.4	168	213	174	151	135	123	114	107	101

NO:	▲ REVISION DESCRIPTION:	▲ DATE:	REV.BY:	▲ CHKD.BY:	▲ APPD.BY:

DRAWN BY: MSJ	DATE: 4/30/98	ROHN
CHECKED BY: HA	DATE: 4/30/98	BRM4 AND BRM410 ALLOWABLE
APP'D ENG: MSJ	DATE: 5/1/98	
APP'D. SALES DL	DATE: 5/4/98	ANTENNA AREAS
FILE NUMBER: 37761DL		
DRAWING NUMBER: A981104-2 OF 9		

BRM4 AND BRM410 ALLOWABLE ANTENNA AREAS

EFFECTIVE PROJECTED AREA (E.P.A.) (FT^2)	BALLAST (LBS)	ZERO VELOCITY LOAD (PSF)	Vs (MPH)	Vmax AT CENTROID OF PROJECTED AREA, (MPH)							
				h=2 FT	h=3 FT	h=4 FT	h=5 FT	h=6 FT	h=7 FT	h=8 FT	h=9 FT
18	300	7.1	57	81	66	57	51	47	43	40	38
	500	11.8	74	104	85	74	66	60	56	52	49
	700	16.6	87	123	101	87	78	71	66	62	58
	900	21.3	99	139	113	98	88	80	74	69	65
	1100	26.0	109	149	122	106	95	86	80	75	70
	1300	30.8	119	159	130	113	101	92	85	80	75
	1500	35.5	128	169	138	119	107	97	90	84	80
	1700	40.2	136	178	145	126	112	103	95	89	84
	1900	45.0	144	186	152	132	118	107	100	93	88
	2100	49.7	151	194	159	137	123	112	104	97	92
	2300	54.4	158	201	164	142	127	116	108	101	95
20	300	7.1	54	77	63	54	48	44	41	38	36
	500	11.8	70	99	81	70	63	57	53	49	47
	700	16.6	83	117	96	83	74	68	63	59	55
	900	21.3	94	132	107	93	83	76	70	66	62
	1100	26.0	104	142	116	100	90	82	76	71	67
	1300	30.8	113	151	123	107	96	87	81	76	71
	1500	35.5	121	160	131	113	101	92	86	80	75
	1700	40.2	129	169	138	119	107	97	90	84	79
	1900	45.0	136	177	144	125	112	102	94	88	83
	2100	49.7	143	184	150	130	117	106	99	92	87
	2300	54.4	150	191	156	135	121	110	102	95	90
22	300	7.1	52	73	60	52	46	42	39	37	34
	500	11.8	67	94	77	67	60	54	50	47	44
	700	16.6	79	112	91	79	71	64	60	56	53
	900	21.3	89	126	102	89	79	72	67	63	59
	1100	26.0	99	135	110	96	86	78	72	68	64
	1300	30.8	107	144	118	102	91	83	77	72	68
	1500	35.5	115	153	125	108	97	88	82	76	72
	1700	40.2	123	161	131	114	102	93	86	80	76
	1900	45.0	130	168	137	119	106	97	90	84	79
	2100	49.7	137	176	143	124	111	101	94	88	83
	2300	54.4	143	182	149	129	115	105	97	91	86
24	300	7.1	49	70	57	49	44	40	37	35	33
	500	11.8	64	90	74	64	57	52	48	45	43
	700	16.6	75	107	87	76	68	62	57	53	50
	900	21.3	86	120	98	85	76	69	64	60	57
	1100	26.0	95	129	106	92	82	75	69	65	61
	1300	30.8	103	138	113	98	87	80	74	69	65
	1500	35.5	110	146	119	103	92	84	78	73	69
	1700	40.2	118	154	126	109	97	89	82	77	73
	1900	45.0	124	161	132	114	102	93	86	81	76
	2100	49.7	131	168	137	119	106	97	90	84	79
	2300	54.4	137	174	142	123	110	101	93	87	82

NO:	▲ REVISION DESCRIPTION:	▲ DATE:	REV.BY:	▲ CHKD.BY:	▲ APPD.BY:

DRAWN BY: MSJ	DATE: 4/30/98	ROHN
CHECKED BY: HA	DATE: 4/30/98	BRM4 AND BRM410 ALLOWABLE
APP'D ENG: MSJ	DATE: 5/1/98	
APP'D. SALES DL	DATE: 5/4/98	ANTENNA AREAS
FILE NUMBER: 37761DL		
DRAWING NUMBER: A981104-3 OF 9		

BALLAST REQUIREMENTS FOR 78 INCH SQUARE BRM

ANTENNA DIAMETER	BALLAST (POUNDS)	ZERO VELOCITY ROOF LOAD (PSF)	MAX. V (MPH)	WIND SPEEDS RESULTING IN SLIDING COEFFICIENT OF FRICTION = .50		
				EL = 0°	EL = 20°	EL = 40°
2 FT (.6m)	150	4	78	70	72	78
	200	5	90	81	83	90
	300	7	110	99	102	110
	400	10	127	115	118	127
	500	12	142	128	132	142
4 FT (1.2m)	200	5	45	41	42	45
	400	10	64	57	59	64
	600	14	78	70	72	78
	800	19	90	81	83	90
	1000	24	101	91	93	101
	1200	29	110	99	102	110
	1400	33	119	107	110	119
	1600	38	127	115	118	127
	1800	43	135	122	125	135
	2000	48	140	128	132	140

NO.:	▲ REVISION DESCRIPTION	▲ DATE	▲ REV.BY	▲ CHKD.BY	▲ APPD.BY

DRAWN BY: MAR	DATE: 11-23-88	UNR-ROHN
CHECKED BY: RAM	DATE: 11-23-88	BRM BALLAST REQUIREMENTS
APP'D. ENG: DGB	DATE: 12-1-88	
APP'D SALES: DL	DATE: 12-5-88	
FILE NUMBER: 24059RK		
DRAWING NUMBER: A881574-1		

Drawing No. A881574-2

1. Ballast requirements are provided to assist consumers in determining the applicability of the 78 inch square ballast roof mount (BRM) for an antenna installation. The ballast data should not be relied upon without competent local professional examination and verification of its accuracy and suitability for a specific site or application.

2. Ballast requirements are based on typical ANSI/EIA-222-D paraboloid antennas supported 12 inches from the vertex of the antenna on a 36 inch long mounting pipe on a flat supporting surface (See note 11). Specific antenna types may require more stringent wind loads and ballast requirements and must be investigated for each installation. The load carrying requirements of the supporting surface, the mast, the antenna and the antenna's connection to the mast must also be investigated for each installation.

3. The ballast weights indicated are net ballast weights, and must be uniformly distributed over all panels. The effective weight of the mount and antenna may be deducted from the ballast weights indicated to determine ballast panel weight requirements. The effective weight of the mount and antenna may be calculated by subtracting the uplift component of wind load from the actual weight of the mount and antenna.
(Worst case ANSI/EIA-222-D uplift wind load component = .000910 (A) (V) 2 at an 80° elevation angle).

4. The zero velocity roof loads shown are equal to the ballast weights indicated divided by the total area enclosed by the perimeter of the mount (i.e. an area greater than the ballast panel contact area). If effective mount and antenna weights are considered when determining ballast panel weight requirements, the zero velocity roof loads will be higher than those indicated due to the absence of the uplift component of wind load. The zero velocity roof load, in all cases, equals the weight of the mount, antenna, and ballast panel weights, divided by the total area enclosed by the perimeter of the mount (42 sq. ft.). Total roof loads under wind loading conditions would include wind forces and moments, weights of ballast, mount, antenna and roof pads. (Worst case ANSI/EIA-222-D download wind component =.003374 (A) (V) 2 at a 60° elevation angle).

5. Maximum wind velocities are based on a minimum 1.5 factor of safety against structural failure and overturning for the worst case antenna elevation angle. (See notes 12 and 13). The wind speeds which may occur at an installation must be determined on an individual site basis.

6. The tabulated wind speeds resulting in sliding are based on a factor of safety (F.S.) equal to 1.0 and a coefficient of friction (μ) equal to .50. (See note 13). A 1.0 factor of safety was used assuming that at higher wind speeds, safety cables or other suitable attachments to the support structure would prevent sliding beyond a safe, designated area. Wind speeds are given for 0, 20, and 40 degree antenna elevation angles. The .50 coefficient of friction value was determined from full-scale load tests using wet UNR-Rohn roof pads on wet troweled finished concrete. The appropriate coefficient of friction to determine wind speeds resulting in sliding must be determined on an individual site basis. The coefficient of friction may vary under changing moisture and temperature conditions.

Drawing No. A881574-2

Wind speeds resulting in sliding for other factors of saftey or for other coefficients of friction may be found by multiplying the tabulated wind speeds resulting in sliding by the following factor:

$$\left[\frac{\mu}{.5\ (F.S.)}\right]^{1/2}$$

μ = Coefficient of Friction
F.S. = Factor of Safety

7. UNR-R0HN recommends that ballast material always be placed prior to mounting the antenna and that roof pads and mount be secured to prevent hazards from occurring under extreme wind loading conditions. Precautions should also be taken to prevent the inadvertent removal of ballast material after installation and to insure that ballast material is fully supported by the ballast support angles (required for ballast to be effective in resisting overturning and slidng).

8. Roof pads are recommended to prevent damage to roof membranes. Pads should be placed under all ballast panels and under the mast pipe. When roof pads are utilized, the minimum coefficient of friction between the ballast panels and roof pad or between the roof pads and supporting surface must be used to calculate the wind speeds resulting in sliding.

9. When adhesives, sealants or pads are utilized, they must be compatible with the supporting surface. They must also be durable and have adequate strength. Precautions should also be taken to insure that damage to the supporting surface will not occur upon wind loading.

10. Adhesives and sealants must be capable of resisting shear, otherwise, they may act as a lubricant and decrease the effective coefficient of friction between the ballast panels and the supporting surface. Windward ballast panels may partially lift off at wind speeds well below the maximum wind speeds indicated. Adhesives or sealants may be disturbed under such circumstances and may require repairing after major wind loading events.

Wind speeds resulting in sliding for other factors of saftey or for other coefficients of friction may be found by multiplying the tabulated wind speeds resulting in sliding by the following factor:

$$\left[\frac{\mu}{.5\ (F.S.)}\right]^{1/2}$$

μ = Coefficient of Friction
F.S. = Factor of Safety

7. UNR-R0HN recommends that ballast material always be placed prior to mounting the antenna and that roof pads and mount be secured to prevent hazards from occurring under extreme wind loading conditions. Precautions should also be taken to prevent the inadvertent removal of ballast material after installation and to insure that ballast material is fully supported by the ballast support angles (required for ballast to be effective in resisting overturning and slidng).

8. Roof pads are recommended to prevent damage to roof membranes. Pads should be placed under all ballast panels and under the mast pipe. When roof pads are utilized, the minimum coefficient of friction between the ballast panels and roof pad or between the roof pads and supporting surface must be used to calculate the wind speeds resulting in sliding.

9. When adhesives, sealants or pads are utilized, they must be compatible with the supporting surface. They must also be durable and have adequate strength. Precautions should also be taken to insure that damage to the supporting surface will not occur upon wind loading.

10. Adhesives and sealants must be capable of resisting shear, otherwise, they may act as a lubricant and decrease the effective coefficient of friction between the ballast panels and the supporting surface. Windward ballast panels may partially lift off at wind speeds well below the maximum wind speeds indicated. Adhesives or sealants may be disturbed under such circumstances and may require repairing after major wind loading events.

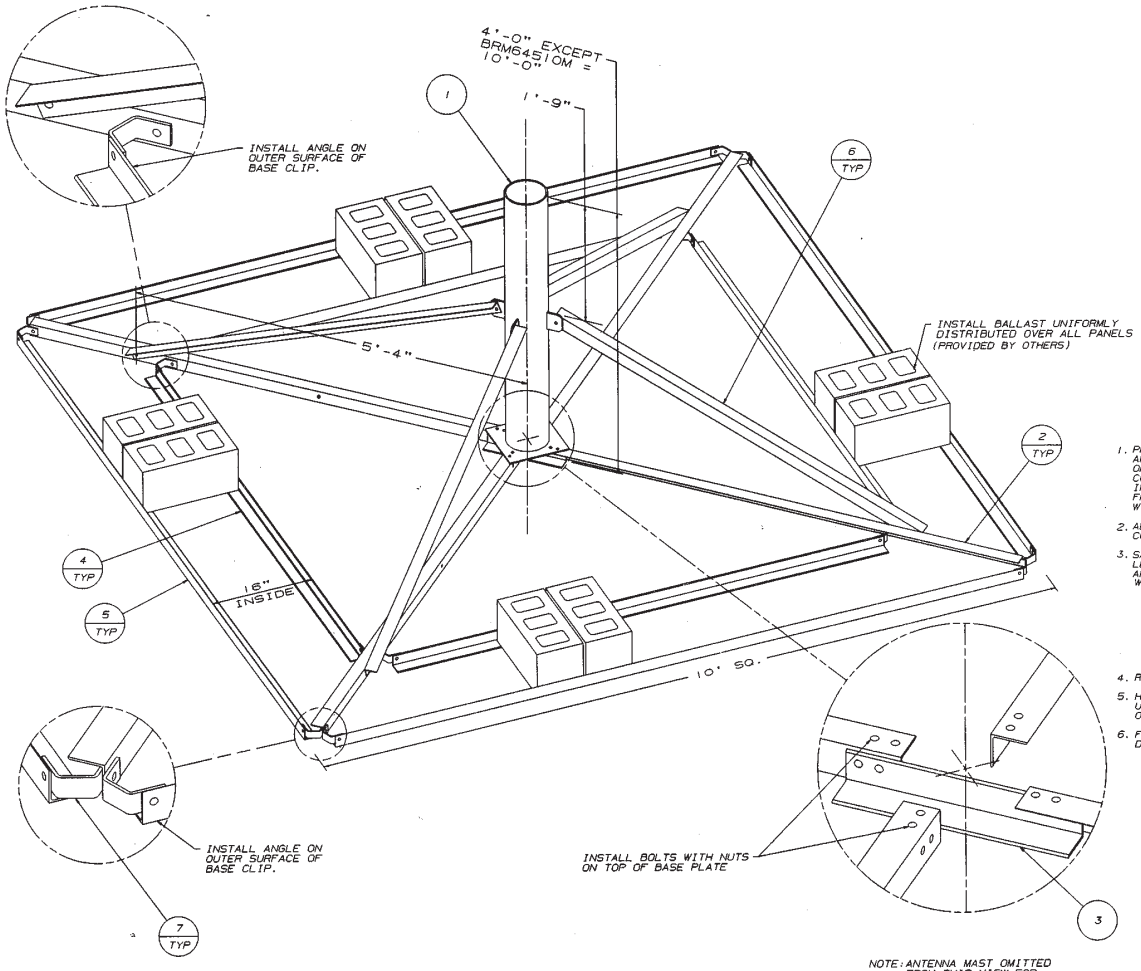

BRM6 NO.	MAST SPECIFICATIONS	
	PART NO.	DESCRIPTION
BRM630M	KY2110	BRM6 WITH 2.5 STD. PIPE(2-7/8 OD) X 45-3/4"
BRM635M	KY1570	BRM6 WITH 3 STD. PIPE(3-1/2 OD) X 45-3/4"
BRM640M	KY1578	BRM6 WITH 3-1/2 STD. PIPE(4 OD) X 45-3/4"
BRM645M	KY1579	BRM6 WITH 4 STD. PIPE(4-1/2 OD) X 45-3/4"
BRM655M	KY1580	BRM6 WITH 5 STD. PIPE(5-9/16 OD) X 45-3/4"
BRM665M	KY1581	BRM6 WITH 6 STD. PIPE(6-5/8 OD) X 45-3/4"
BRM64510M	KY2043	BRM6 WITH 4 STD. PIPE(4-1/2 OD) X 117-3/4"

BRM6 BILL OF MATERIAL

ITEM	QUAN.	PART NO.	DESCRIPTION	DWG. NO.
1	1	SEE CHART	ANTENNA MAST SUPPORT	C890745
2	4	KY1573M	BASE DIAGONAL	B890738
3	1	KY1574	BASE ANGLE CENTER	B890739
4	4	KY1572	BASE GIRT INNER	B890744
5	4	KY1571	BASE GIRT OUTER	B890740
6	4	KY1575	KNEE BRACE ANGLE	B890741
7	1	KY1577A	HARDWARE KIT	N/A

KY1577A HARDWARE KIT BILL OF MATERIAL

ITEM	QUAN.	PART NO.	DESCRIPTION	DWG. NO.
8	16	KY1576	BASE CLIPS	B881269
9	44	210079G	BOLT 3/8 X 1	N/A
10	44	230024	NUT 3/8 DIA.	N/A

NOTE: ALL PARTS HOT DIP GALVANIZED

GENERAL NOTES

1. PRIOR TO INSTALLATION VERIFY THAT THE INSTALLATION, ROOF MATERIAL AND SUPPORTING STRUCTURE HAVE BEEN INVESTIGATED AND FOUND CAPABLE OF WITHSTANDING ALL LOADS IMPOSED BY THE PROPOSED ANTENNA SYSTEM. CONFIRM THAT THE SUPPORTING SURFACES, ANCHORS, AND/OR SAFETY CABLES, IF REQUIRED, HAVE BEEN FOUND TO BE ADEQUATE TO RESIST THE REACTIONS FROM THE ANTENNA SYSTEM AND THAT THE INSTALLATION WILL BE IN CONFORMANCE WITH ALL APPLICABLE LOCAL, STATE AND FEDERAL REQUIREMENTS.
2. ALL ANTENNA INSTALLATIONS MUST BE GROUNDED TO MEET APPLICABLE CODES.
3. SAFETY CABLE KITS CONSISTING OF A 3/16 EHS SAFETY CABLE (3990 LBS ULTIMATE STRENGTH) WITH SIX CLAMPS TO SECURE MOUNT AND/OR BALLAST ARE AVAILABLE AS AN OPTION. USE THREE CABLE CLAMPS AT EACH END CONNECTION WITH THE U-BOLT ON THE DEAD END OF THE CABLE.

SAFETY CABLE LENGTH	PART NUMBER
50 FT	SCK50
100 FT	SCK100
150 FT	SCK150

4. ROOF PADS ARE AVAILABLE AS AN OPTION, PART NUMBER BRM6PAD.
5. HIGH STRENGTH BOLTS ARE PROVIDED. NUT LOCKING IS DEPENDENT UPON INITIAL TENSION IN BOLT. INSPECT MOUNT, ANTENNA AND TIGHTNESS OF NUTS AT SIX MONTH MAXIMUM INTERVALS.
6. FOR ASSISTANCE IN DETERMINING BALLAST REQUIREMENTS REFER TO DRAWING AB90747, 1-6, AND AS42359, 1-8.

No.	Revision Description	Date	Rev By	Chk By	Appd By
R5	ADD P/N BRM630M	6-13-96	JDM	WMN	TS
R4	ADD P/N BRM64510M	11/7/94	WDU	WMN	TS
R3	P/N 230024 WAS 240019	12/8/89	WDU	WMN	TWS
R2	ADD HOLE FOR ADD. BALLAST KIT	11/30/89	WDU	WMN	TS
R1	P/N 240019 WAS P/N 340034	3/7/89	WDU	WMN	TS

ROHN

Scale: NONE	By	Date
Drawn:	WDU	2/10/89
Checked:	WMN	2/14/89
App. Eng.:	TS	2/24/89
App. Sales:	DL	2/24/89

Title: BRM6 BALLAST ROOF MOUNT

ENG. FILE:

DRAWING NO.: D890722R5

BRM6 BALLAST REQUIREMENTS TABLE

ANTENNA DIAMETER	BALLAST (POUNDS)	ZERO VELOCITY LOAD (PSF)	DESIGN WIND VELOCITIES COEFFICIENT OF FRICTION = .50					
			EL = 0°		EL = 20°		EL = 40°	
			Vmax	Vs	Vmax	Vs	Vmax	Vs
4 FT (1.2m)	500	5.0	87	67	103	75	112	92
	750	7.5	107	82	131	92	142	113
	1000	10.0	125	95	154	107	167	131
	1250	12.5	139	106	169	119	189	146
	1500	15.0	148	117	180	131	203	160
	1750	17.5	157	126	190	141	211	173
	2000	20.0	165	135	196	151	211	185
6 FT (1.8m)	500	5.0	58	45	65	50	69	61
	750	7.5	71	55	83	61	89	75
	1000	10.0	83	63	99	71	106	87
	1250	12.5	93	71	112	79	120	97
	1500	15.0	99	78	120	87	129	107
	1750	17.5	105	84	127	94	137	115
	2000	20.0	110	90	130	101	141	123
	2250	22.5	115	95	130	107	141	131
	2500	25.0	120	100	130	113	141	138
	2750	27.5	125	105	130	118	141	141
	3000	30.0	127	110	130	123	141	141
8 FT (2.4m)	750	7.5	53	41	57	46	60	56
	1000	10.0	62	47	69	53	73	65
	1250	12.5	69	53	79	59	84	73
	1500	15.0	74	58	85	65	90	80
	1750	17.5	78	63	91	70	96	86
	2000	20.0	82	67	97	75	102	92
	2250	22.5	86	71	98	80	103	98
	2500	25.0	90	75	98	84	103	103
	2750	27.5	94	79	98	88	103	103
	3000	30.0	95	82	98	92	103	103

NO.:	▲ REVISION DESCRIPTION	▲ DATE	▲ REV.BY	▲ CHKD.BY	▲ APPD.BY

DRAWN BY: CSR	DATE: 2-8-89	UNR-ROHN
CHECKED BY: MJW	DATE: 3/7/89	BRM6 BALLAST REQUIREMENTS
APP'D. ENG: DGB	DATE: 3/7/89	
APP'D SALES: PL	DATE: 3/7/89	
FILE NUMBER: 24330RK		
DRAWING NUMBER: A890747-1 of 6		

NOTES FOR BRM6 BALLAST REQUIREMENTS TABLE

1. Ballast requirements are provided to assist consumers in determining the applicability of the BRM6 for an antenna installation. Refer to sheets 4, 5, and 6 for the criteria used to develop the ballast requirements table. The ballast data and development criteria should not be relied upon without competent local professional examination and verification of its accuracy and suitability for a specific site or application.

2. Ballast requirements are based on typical ANSI/EIA-222-D paraboloid antennas supported 12 inches from the vertex of the antenna on a 48 inch long mounting pipe on a flat supporting surface. The vertex of the antenna is assumed to be at the top of the mounting pipe. Specific antenna types and/or other mounting configurations may require more stringent strength and ballast requirements and must be investigated for each installation. The load carrying requirements of the supporting surface, the mast, the antenna and the antenna's connection to the mast must also be investigated for each installation.

3. The ballast weights indicated are net ballast weights, and must be uniformly distributed over all panels. The weight of the mount and antenna may be considered as ballast. The following table summarizes the weight of the BRM6 mount:

BRM6 Antenna Mount Weights					
Mount No.	BRM635	BRM640	BRM645	BRM655	BRM665
Mast Pipe Size	3″ Std.	3 1/2″ Std.	4″ Std.	5″ Std.	6″ Std.
Weight (lbs.)	244	251	257	273	290

4. The zero velocity loads shown are equal to the ballast weights indicated divided by the total area enclosed by the perimeter of the mount (100 sq. ft.). This area is greater than the ballast panel contact area. Loads which must also be investigated include reactions caused by wind forces and movements, live loads, and dead loads of ballast, mount, antenna, miscellaneous equipment and roof pads. Refer to sheet 4 for maximum ANSI/EIA-222-D wind load coefficients for paraboloid antennas supported as described in note 2.

5. The tabulated maximum wind velocities (Vmax) are based on a minimum 1.5 factor of safety against structural failure and overturning. The wind velocity and the appropriate factor of safety for an installation must be determined on an individual site basis. Potential increases in wind velocity due to channeling, roof projections, and other obstructions, must be considered when determining ballast requirements.

NOTES FOR BRM6 BALLAST REQUIREMENTS TABLE

6. The tabulated wind velocities resulting in sliding (Vs) are based on a factor of safety equal to 1.0 and a coefficient of friction equal to .50. A 1.0 factor of safety was used assuming that at higher wind velocities, safety cables or other suitable attachments to the support structure would prevent sliding beyond a safe, designated area. Wind velocities are given for 0, 20 and 40 degree antenna elevation angles. The appropriate coefficient of friction and factor of safety to determine wind velocities resulting in sliding must be determined on an individual site basis. The coefficient of friction may vary under changing moisture and temperature conditions. The minimum coefficient of friction must be used to evaluate sliding resistance.

7. The values of Vs indicated do not apply for installations which are prevented from sliding by cables or other suitable attachments to the supporting structure. Attachments to the supporting structure, under such conditions, must resist the portion of wind load which exceeds the frictional sliding resistance of the mount.

8. Refer to sheets 4, 5, and 6 for assistance in determining Vmax and Vs for specific wind load coefficients and/or other factors of safety and coefficients of friction.

9. Roof pads are recommended to prevent damage to roof membranes. Pads should be placed under all ballast panels and under the mast pipe. The minimum coefficient of friction must be considered for calculating the wind velocities resulting in sliding. When roof pads are utilized, the surface between the ballast panels and the roof pads and the surface between the roof pads and the supporting surface must both be considered.

10. Rohn recommends that ballast material always be placed prior to mounting the antenna and that roof pads and mount be secured to prevent hazards from occurring under extreme wind loading conditions. Precautions should also be taken to prevent the inadvertent removal of ballast material after installation and to insure that ballast material is fully supported by the ballast support angles (required for ballast to be effective in resisting overturning and sliding).

11. When adhesives, sealants or pads are utilized, they must be compatible with the supporting surface. They must also be durable and have adequate strength. Precautions should also be taken to insure that damage to the supporting surface will not occur upon wind loading.

12. Adhesives and sealants must be capable of resisting shear, otherwise, they may act as a lubricant and decrease the effective coefficient of friction between the ballast panels and the supporting surface. Windward ballast panels may partially lift off at wind velocities below the maximum wind velocities indicated. Adhesives or sealants may be disturbed under such circumstances and may require repairing after major wind loading events.

13. The installation, roof material and supporting structure must be capable of withstanding all loads imposed by the antenna system. Supporting surfaces, anchors and/or safety cables must be sufficient to resist the reactions from the antenna system. The installation must meet all applicable local, state and federal requirements. Due to the many variables involved, Rohn does not accept responsibility for verifying the applicability of the BRM6 for a specific installation.

BRM64510 ALLOWABLE ANTENNA AREAS

EFFECTIVE PROJECTED AREA (E.P.A.)	BALLAST (LBS)	ZERO VELOCITY LOAD (PSF)	Vs (MPH)	Vmax AT CENTROID OF PROJECTED AREA, (MPH) 4" STD. PIPE MAST, 4.5" O.D., GRADE 50						
				CENTROID OF E.P.A.						
				h=4 FT	h=5 FT	h=6 FT	h=7 FT	h=8 FT	h=9 FT	h=10 FT
10 FT^2	500	5.0	99	128	114	104	96	90	85	81
	750	7.5	121	156	140	128	118	110	104	99
	1000	10.0	140	180	161	147	136	128	120	114
	1250	12.5	156	202	180	165	152	143	134	128
	1500	15.0	171	218	195	178	165	154	145	138
	1750	17.5	185	230	206	188	174	163	154	146
	2000	20.0	198	242	217	198	183	171	162	153
	2250	22.5	210	254	227	207	192	179	169	160
	2500	25.0	221	265	237	216	200	187	176	167
	2750	27.5	232	275	246	225	208	195	183	174
	3000	30.0	242	280	250	228	211	198	186	177
15 FT^2	500	5.0	81	104	93	85	79	74	69	66
	750	7.5	99	128	114	104	96	90	85	81
	1000	10.0	114	147	132	120	111	104	98	93
	1250	12.5	128	165	147	134	125	116	110	104
	1500	15.0	140	178	159	145	134	126	119	113
	1750	17.5	151	188	168	154	142	133	125	119
	2000	20.0	161	198	177	162	150	140	132	125
	2250	22.5	171	207	185	169	157	147	138	131
	2500	25.0	180	216	193	176	163	153	144	137
	2750	27.5	189	225	201	183	170	159	150	142
	3000	30.0	198	228	204	186	173	161	152	144
20 FT^2	500	5.0	70	90	81	74	68	64	60	57
	750	7.5	86	110	99	90	84	78	74	70
	1000	10.0	99	128	114	104	96	90	85	81
	1250	12.5	110	143	128	116	108	101	95	90
	1500	15.0	121	154	138	126	116	109	103	97
	1750	17.5	131	163	146	133	123	115	109	103
	2000	20.0	140	171	153	140	130	121	114	108
	2250	22.5	148	179	160	147	136	127	120	113
	2500	25.0	156	187	167	153	141	132	125	118
	2750	27.5	164	195	174	159	147	138	130	123
	3000	30.0	171	198	177	161	149	140	132	125

NO.:	▲ REVISION DESCRIPTION	▲DATE:	▲REV.BY:	▲CHKD.BY	▲APPD.BY

DRAWN BY: CSR	DATE: 9/14/94	UNR-ROHN
CHECKED BY: HA	DATE: 11-3-94	BRM64510 ALLOWABLE ANTENNA AREAS
APP'D.ENG: DGB	DATE: 11-3-94	
APP'D. SALES: DL	DATE: 11-4-94	
FILE NUMBER: 24330RK		
DRAWING NUMBER: A942359-1 of 8		

BRM64510 ALLOWABLE ANTENNA AREAS

EFFECTIVE PROJECTED AREA (E.P.A.)	BALLAST (LBS)	ZERO VELOCITY LOAD (PSF)	Vs (MPH)	Vmax AT CENTROID OF PROJECTED AREA, (MPH) 4" STD. PIPE MAST, 4.5" O.D., GRADE 50						
				CENTROID OF E.P.A.						
				h=4 FT	h=5 FT	h=6 FT	h=7 FT	h=8 FT	h=9 FT	h=10 FT
25 FT^2	500	5.0	63	81	72	66	61	57	54	51
	750	7.5	77	99	88	81	75	70	66	63
	1000	10.0	88	114	102	93	86	81	76	72
	1250	12.5	99	128	114	104	96	90	85	81
	1500	15.0	108	138	123	113	104	97	92	87
	1750	17.5	117	146	130	119	110	103	97	92
	2000	20.0	125	153	137	125	116	108	102	97
	2250	22.5	133	160	144	131	121	113	107	101
	2500	25.0	140	167	150	137	127	118	112	106
	2750	27.5	147	174	156	142	132	123	116	110
	3000	30.0	153	177	158	144	134	125	118	112
30 FT^2	500	5.0	57	74	66	60	56	52	49	47
	750	7.5	70	90	81	74	68	64	60	57
	1000	10.0	81	104	93	85	79	74	69	66
	1250	12.5	90	116	104	95	88	82	78	74
	1500	15.0	99	126	113	103	95	89	84	80
	1750	17.5	107	133	119	109	101	94	89	84
	2000	20.0	114	140	125	114	106	99	93	89
	2250	22.5	121	147	131	120	111	104	98	93
	2500	25.0	128	153	137	125	115	108	102	97
	2750	27.5	134	159	142	130	120	112	106	100
	3000	30.0	140	161	144	132	122	114	108	102
35 FT^2	500	5.0	53	68	61	56	52	48	45	43
	750	7.5	65	84	75	68	63	59	56	53
	1000	10.0	75	96	86	79	73	68	64	61
	1250	12.5	84	108	96	88	82	76	72	68
	1500	15.0	91	116	104	95	88	82	78	74
	1750	17.5	99	123	110	101	93	87	82	78
	2000	20.0	106	130	116	106	98	92	86	82
	2250	22.5	112	136	121	111	103	96	90	86
	2500	25.0	118	141	127	115	107	100	94	89
	2750	27.5	124	147	132	120	111	104	98	93
	3000	30.0	129	149	134	122	113	106	100	94

NO.:	▲ REVISION DESCRIPTION	▲DATE:	▲REV.BY:	▲CHKD.BY	▲APPD.BY

DRAWN BY: CSR	DATE: 9/14/94	UNR-ROHN
CHECKED BY: HA	DATE: 11-3-94	BRM64510 ALLOWABLE ANTENNA AREAS
APP'D.ENG: DGB	DATE: 11-3-94	
APP'D. SALES:	DATE:	
FILE NUMBER: 24330RK		
DRAWING NUMBER: A942359-2 of 8		

BRM64510 ALLOWABLE ANTENNA AREAS

EFFECTIVE PROJECTED AREA (E.P.A.)	BALLAST (LBS)	ZERO VELOCITY LOAD (PSF)	Vs (MPH)	Vmax AT CENTROID OF PROJECTED AREA, (MPH) 4" STD. PIPE MAST, 4.5" O.D., GRADE 50						
				CENTROID OF E.P.A.						
				h=4 FT	h=5 FT	h=6 FT	h=7 FT	h=8 FT	h=9 FT	h=10 FT
40 FT^2	500	5.0	49	64	57	52	48	45	43	40
	750	7.5	61	78	70	64	59	55	52	49
	1000	10.0	70	90	81	74	68	64	60	57
	1250	12.5	78	101	90	82	76	71	67	64
	1500	15.0	86	109	97	89	82	77	73	69
	1750	17.5	92	115	103	94	87	81	77	73
	2000	20.0	99	121	108	99	92	86	81	77
	2250	22.5	105	127	113	104	96	90	85	80
	2500	25.0	110	132	118	108	100	94	88	84
	2750	27.5	116	138	123	112	104	97	92	87
	3000	30.0	121	140	125	114	106	99	93	88
45 FT^2	500	5.0	47	60	54	49	45	43	40	38
	750	7.5	57	74	66	60	56	52	49	47
	1000	10.0	66	85	76	69	64	60	57	54
	1250	12.5	74	95	85	78	72	67	63	60
	1500	15.0	81	103	92	84	78	73	68	65
	1750	17.5	87	109	97	89	82	77	72	69
	2000	20.0	93	114	102	93	86	81	76	72
	2250	22.5	99	120	107	98	90	85	80	76
	2500	25.0	104	125	112	102	94	88	83	79
	2750	27.5	109	130	116	106	98	92	86	82
	3000	30.0	114	132	118	108	100	93	88	83
50 FT^2	500	5.0	44	57	51	47	43	40	38	36
	750	7.5	54	70	63	57	53	49	47	44
	1000	10.0	63	81	72	66	61	57	54	51
	1250	12.5	70	90	81	74	68	64	60	57
	1500	15.0	77	97	87	80	74	69	65	62
	1750	17.5	83	103	92	84	78	73	69	65
	2000	20.0	88	108	97	89	82	77	72	69
	2250	22.5	94	113	101	93	86	80	76	72
	2500	25.0	99	118	106	97	89	84	79	75
	2750	27.5	104	123	110	100	93	87	82	78
	3000	30.0	108	125	112	102	94	88	83	79

NO.:	▲ REVISION DESCRIPTION	▲DATE:	▲REV.BY:	▲CHKD.BY	▲APPD.BY

DRAWN BY: CSR	DATE: 9/14/94	UNR-ROHN
CHECKED BY: HA	DATE: 11-3-94	BRM64510 ALLOWABLE ANTENNA AREAS
APP'D.ENG: DGB	DATE: 11-3-94	
APP'D. SALES:	DATE:	
FILE NUMBER: 24330RK		
DRAWING NUMBER: A942359-3 of 8		

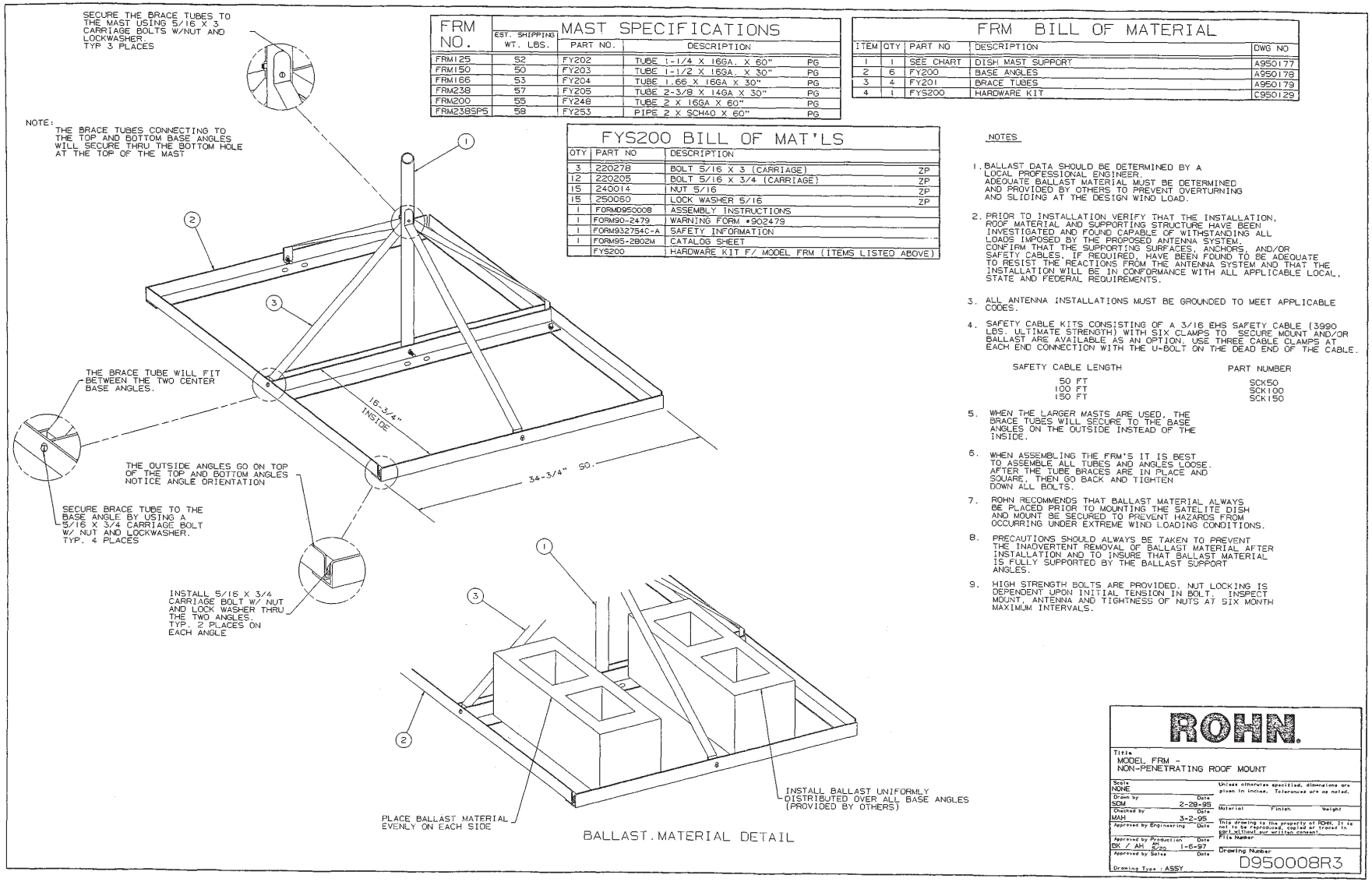

MAST SPECIFICATIONS

FRM NO.	EST. SHIPPING WT. LBS.	PART NO.	DESCRIPTION	
FRM125	52	FY202	TUBE 1-1/4 X 16GA. X 60"	PG
FRM150	50	FY203	TUBE 1-1/2 X 16GA. X 30"	PG
FRM166	53	FY204	TUBE 1.66 X 16GA X 30"	PG
FRM238	57	FY205	TUBE 2-3/8 X 14GA X 30"	PG
FRM200	55	FY248	TUBE 2 X 16GA X 60"	PG
FRM238SPS	58	FY253	PIPE 2 X SCH40 X 60"	PG

FRM BILL OF MATERIAL

ITEM	QTY	PART NO	DESCRIPTION	DWG NO
1	1	SEE CHART	DISH MAST SUPPORT	A950177
2	6	FY200	BASE ANGLES	A950178
3	4	FY201	BRACE TUBES	A950179
4	1	FYS200	HARDWARE KIT	C950129

FYS200 BILL OF MAT'LS

QTY	PART NO	DESCRIPTION	
3	220278	BOLT 5/16 X 3 (CARRIAGE)	ZP
12	220205	BOLT 5/16 X 3/4 (CARRIAGE)	ZP
15	240014	NUT 5/16	ZP
15	250050	LOCK WASHER 5/16	ZP
1	FORM0950008	ASSEMBLY INSTRUCTIONS	
1	FORM90-2479	WARNING FORM #902479	
1	FORM932754C-A	SAFETY INFORMATION	
1	FORM95-2802M	CATALOG SHEET	
	FYS200	HARDWARE KIT F/ MODEL FRM (ITEMS LISTED ABOVE)	

NOTES

1. BALLAST DATA SHOULD BE DETERMINED BY A LOCAL PROFESSIONAL ENGINEER. ADEQUATE BALLAST MATERIAL MUST BE DETERMINED AND PROVIDED BY OTHERS TO PREVENT OVERTURNING AND SLIDING AT THE DESIGN WIND LOAD.
2. PRIOR TO INSTALLATION VERIFY THAT THE INSTALLATION, ROOF MATERIAL AND SUPPORTING STRUCTURE HAVE BEEN INVESTIGATED AND FOUND CAPABLE OF WITHSTANDING ALL LOADS IMPOSED BY THE PROPOSED ANTENNA SYSTEM. CONFIRM THAT THE SUPPORTING SURFACES, ANCHORS, AND/OR SAFETY CABLES, IF REQUIRED, HAVE BEEN FOUND TO BE ADEQUATE TO RESIST THE REACTIONS FROM THE ANTENNA SYSTEM AND THAT THE INSTALLATION WILL BE IN CONFORMANCE WITH ALL APPLICABLE LOCAL, STATE AND FEDERAL REQUIREMENTS.
3. ALL ANTENNA INSTALLATIONS MUST BE GROUNDED TO MEET APPLICABLE CODES.
4. SAFETY CABLE KITS CONSISTING OF A 3/16 EHS SAFETY CABLE (3990 LBS. ULTIMATE STRENGTH) WITH SIX CLAMPS TO SECURE MOUNT AND/OR BALLAST ARE AVAILABLE AS AN OPTION. USE THREE CABLE CLAMPS AT EACH END CONNECTION WITH THE U-BOLT ON THE DEAD END OF THE CABLE.

SAFETY CABLE LENGTH	PART NUMBER
50 FT	SCK50
100 FT	SCK100
150 FT	SCK150

5. WHEN THE LARGER MASTS ARE USED, THE BRACE TUBES WILL SECURE TO THE BASE ANGLES ON THE OUTSIDE INSTEAD OF THE INSIDE.
6. WHEN ASSEMBLING THE FRM'S IT IS BEST TO ASSEMBLE ALL TUBES AND ANGLES LOOSE. AFTER THE TUBE BRACES ARE IN PLACE AND SQUARE, THEN GO BACK AND TIGHTEN DOWN ALL BOLTS.
7. ROHN RECOMMENDS THAT BALLAST MATERIAL ALWAYS BE PLACED PRIOR TO MOUNTING THE SATELITE DISH AND MOUNT BE SECURED TO PREVENT HAZARDS FROM OCCURRING UNDER EXTREME WIND LOADING CONDITIONS.
8. PRECAUTIONS SHOULD ALWAYS BE TAKEN TO PREVENT THE INADVERTENT REMOVAL OF BALLAST MATERIAL AFTER INSTALLATION AND TO INSURE THAT BALLAST MATERIAL IS FULLY SUPPORTED BY THE BALLAST SUPPORT ANGLES.
9. HIGH STRENGTH BOLTS ARE PROVIDED. NUT LOCKING IS DEPENDENT UPON INITIAL TENSION IN BOLT. INSPECT MOUNT, ANTENNA AND TIGHTNESS OF NUTS AT SIX MONTH MAXIMUM INTERVALS.

ROHN

Title
MODEL FRM -
NON-PENETRATING ROOF MOUNT

Scale NONE
Unless otherwise specified, dimensions are given in inches. Tolerances are as noted.
Drawn by SDM Date 2-28-95
Checked by MAH Date 3-2-95
Approved by Engineering Date
Material Finish Weight

Approved by Production BK / AH Date 1-6-97
Approved by Sales Date
File Number
Drawing Number D950008R3
Drawing Type : ASSY

Form No. 95-2802MR1

ROHN® NON-PENETRATING ROOF MOUNT

For Wirelss Cable, DBS, and UHF/VHF Reception
- No penetration of roof surface
- Galvanized for corrosion protection
- Designed for concrete block ballast

Specifications		
Model	**Mast Height**	**Mast O.D.**
FRM125	60″	1-1/4″
FRM150	26″	1-1/2″
FRM166	26″	1.66″
FRM238	30″	2-3/8″
FRM238SP5	60″	2-3/8″

The FRM series is one of the latest additions to the complete line of ROHN antenna support products. Other receive antenna mounts include gable end mounts, tripod mounts, telescoping masts, towers and wall brackets. The FRM series goes together quickly, with a minimum of bolted connections. The angle steel frame provides sufficient room to hold up to eight concrete blocks (blocks not provided). Disassembled, the lightweight UPS Shippable FRM stores in very small spaces with the angle members nested and the tube braces bundled. Varied mast heights are available to keep a low profile or to allow the antenna to “look” over rooftop obstructions.

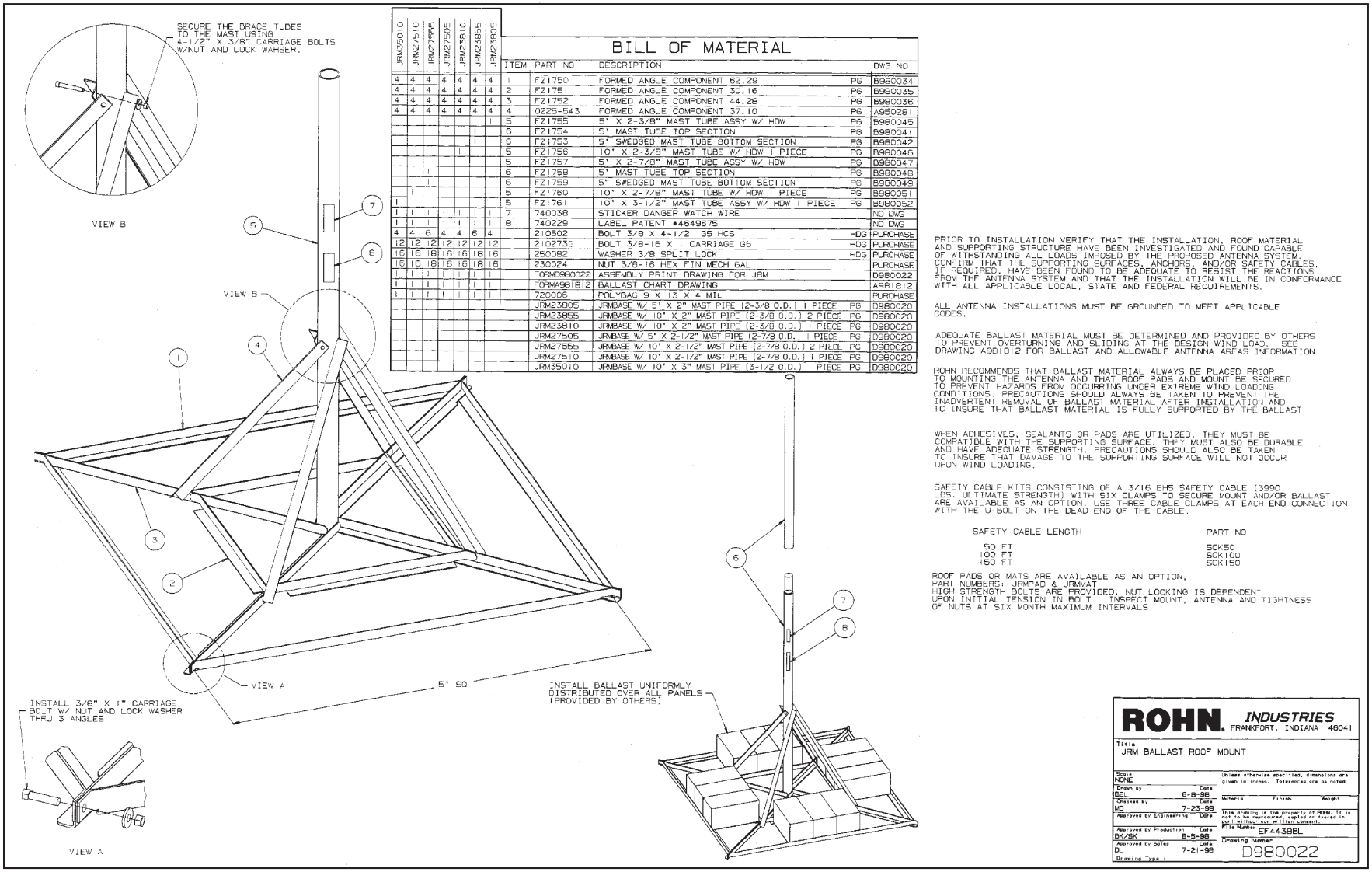

BILL OF MATERIAL

JRM35010	JRM27510	JRM27555	JRM27505	JRM23810	JRM23855	JRM23905	ITEM	PART NO	DESCRIPTION		DWG NO
4	4	4	4	4	4	4	1	FZ1750	FORMED ANGLE COMPONENT 62.29	PG	B980034
4	4	4	4	4	4	4	2	FZ1751	FORMED ANGLE COMPONENT 30.16	PG	B980035
4	4	4	4	4	4	4	3	FZ1752	FORMED ANGLE COMPONENT 44.28	PG	B980036
4	4	4	4	4	4	4	4	0225-543	FORMED ANGLE COMPONENT 37.10	PG	A950281
							5	FZ1755	5' X 2-3/8" MAST TUBE ASSY W/ HDW	PG	B980045
					1		6	FZ1754	5' MAST TUBE TOP SECTION	PG	B980041
					1		6	FZ1753	5' SWEDGED MAST TUBE BOTTOM SECTION	PG	B980042
				1			5	FZ1756	10' X 2-3/8" MAST TUBE W/ HDW 1 PIECE	PG	B980046
			1				5	FZ1757	5' X 2-7/8" MAST TUBE ASSY W/ HDW	PG	B980047
		1					6	FZ1758	5' MAST TUBE TOP SECTION	PG	B980048
		1					6	FZ1759	5" SWEDGED MAST TUBE BOTTOM SECTION	PG	B980049
	1						5	FZ1760	10' X 2-7/8" MAST TUBE W/ HDW 1 PIECE	PG	B980051
1							5	FZ1761	10' X 3-1/2" MAST TUBE ASSY W/ HDW 1 PIECE	PG	B980052
1	1	1	1	1	1	1	7	740038	STICKER DANGER WATCH WIRE		NO DWG
1	1	1	1	1	1	1	8	740229	LABEL PATENT #4649675		NO DWG
4	4	6	4	4	6	4		210502	BOLT 3/8 X 4-1/2 G5 HCS	HDG	PURCHASE
12	12	12	12	12	12	12		2102730	BOLT 3/8-16 X 1 CARRIAGE G5	HDG	PURCHASE
16	16	18	16	16	18	16		250082	WASHER 3/8 SPLIT LOCK	HDG	PURCHASE
16	16	18	16	16	18	16		230024	NUT 3/8-16 HEX FIN MECH GAL		PURCHASE
1	1	1	1	1	1	1		FORMD980022	ASSEMBLY PRINT DRAWING FOR JRM		D980022
1	1	1	1	1	1	1		FORMA981812	BALLAST CHART DRAWING		A981812
1	1	1	1	1	1	1		720006	POLYBAG 9 X 13 X 4 MIL		PURCHASE
								JRM23905	JRMBASE W/ 5' X 2" MAST PIPE (2-3/8 O.D.) 1 PIECE	PG	D980020
								JRM23855	JRMBASE W/ 10' X 2" MAST PIPE (2-3/8 O.D.) 2 PIECE	PG	D980020
								JRM23810	JRMBASE W/ 10' X 2" MAST PIPE (2-3/8 O.D.) 1 PIECE	PG	D980020
								JRM27505	JRMBASE W/ 5' X 2-1/2" MAST PIPE (2-7/8 O.D.) 1 PIECE	PG	D980020
								JRM27555	JRMBASE W/ 10' X 2-1/2" MAST PIPE (2-7/8 O.D.) 2 PIECE	PG	D980020
								JRM27510	JRMBASE W/ 10' X 2-1/2" MAST PIPE (2-7/8 O.D.) 1 PIECE	PG	D980020
								JRM35010	JRMBASE W/ 10' X 3" MAST PIPE (3-1/2 O.D.) 1 PIECE	PG	D980020

PRIOR TO INSTALLATION VERIFY THAT THE INSTALLATION, ROOF MATERIAL AND SUPPORTING STRUCTURE HAVE BEEN INVESTIGATED AND FOUND CAPABLE OF WITHSTANDING ALL LOADS IMPOSED BY THE PROPOSED ANTENNA SYSTEM. CONFIRM THAT THE SUPPORTING SURFACES, ANCHORS, AND/OR SAFETY CABLES, IF REQUIRED, HAVE BEEN FOUND TO BE ADEQUATE TO RESIST THE REACTIONS FROM THE ANTENNA SYSTEM AND THAT THE INSTALLATION WILL BE IN CONFORMANCE WITH ALL APPLICABLE LOCAL, STATE AND FEDERAL REQUIREMENTS.

ALL ANTENNA INSTALLATIONS MUST BE GROUNDED TO MEET APPLICABLE CODES.

ADEQUATE BALLAST MATERIAL MUST BE DETERMINED AND PROVIDED BY OTHERS TO PREVENT OVERTURNING AND SLIDING AT THE DESIGN WIND LOAD. SEE DRAWING A981812 FOR BALLAST AND ALLOWABLE ANTENNA AREAS INFORMATION

ROHN RECOMMENDS THAT BALLAST MATERIAL ALWAYS BE PLACED PRIOR TO MOUNTING THE ANTENNA AND THAT ROOF PADS AND MOUNT BE SECURED TO PREVENT HAZARDS FROM OCCURRING UNDER EXTREME WIND LOADING CONDITIONS. PRECAUTIONS SHOULD ALWAYS BE TAKEN TO PREVENT THE INADVERTENT REMOVAL OF BALLAST MATERIAL AFTER INSTALLATION AND TO INSURE THAT BALLAST MATERIAL IS FULLY SUPPORTED BY THE BALLAST

WHEN ADHESIVES, SEALANTS OR PADS ARE UTILIZED, THEY MUST BE COMPATIBLE WITH THE SUPPORTING SURFACE. THEY MUST ALSO BE DURABLE AND HAVE ADEQUATE STRENGTH. PRECAUTIONS SHOULD ALSO BE TAKEN TO INSURE THAT DAMAGE TO THE SUPPORTING SURFACE WILL NOT OCCUR UPON WIND LOADING.

SAFETY CABLE KITS CONSISTING OF A 3/16 EHS SAFETY CABLE (3990 LBS. ULTIMATE STRENGTH) WITH SIX CLAMPS TO SECURE MOUNT AND/OR BALLAST ARE AVAILABLE AS AN OPTION. USE THREE CABLE CLAMPS AT EACH END CONNECTION WITH THE U-BOLT ON THE DEAD END OF THE CABLE.

SAFETY CABLE LENGTH	PART NO
50 FT	SCK50
100 FT	SCK100
150 FT	SCK150

ROOF PADS OR MATS ARE AVAILABLE AS AN OPTION, PART NUMBERS, JRMPAD & JRMMAT
HIGH STRENGTH BOLTS ARE PROVIDED. NUT LOCKING IS DEPENDENT UPON INITIAL TENSION IN BOLT. INSPECT MOUNT, ANTENNA AND TIGHTNESS OF NUTS AT SIX MONTH MAXIMUM INTERVALS

ROHN. INDUSTRIES
FRANKFORT, INDIANA 46041

Title: JRM BALLAST ROOF MOUNT

Scale: NONE
Drawn by: BEL — Date: 6-8-98
Checked by: MD — Date: 7-23-98
Approved by Engineering — Date:
Approved by Production: BK/SK — Date: 8-5-98
Approved by Sales: DL — Date: 7-21-98
Drawing Type:

Unless otherwise specified, dimensions are given in inches. Tolerances are as noted.
Material — Finish — Weight

File Number: EF4438BL
Drawing Number: D980022

JRM ALLOWABLE ANTENNA AREAS

EFFECTIVE PROJECTED AREA (EPA) (FT^2)	BALLAST (LBS)	ZERO VELOCITY LOAD (PSF)	Vs (MPH)	Vmax AT CENTROID OF PROJECTED AREA (MPH)							
				H=2FT	H=3FT	H=4FT	H=5FT	H=6FT	H=7FT	H=8FT	H=9FT
4	250	10.0	110	129	105	91	82	75	69	65	61
	350	14.0	131	153	125	108	97	88	82	76	72
	450	18.0	148	173	141	122	110	100	93	87	82
	550	22.0	164	191	156	135	121	111	102	96	90
	650	26.0	178	208	170	147	132	120	111	104	98
	750	30.0	191	224	183	158	141	129	120	112	105
	850	34.0	204	238	194	168	151	137	127	119	112
	950	38.0	215	252	205	178	159	145	135	126	119
	1050	42.0	226	265	216	187	167	153	141	132	125
	1150	46.0	237	277	226	196	175	160	148	138	131
	1250	50.0	247	289	236	204	183	167	154	144	136
5	250	10.0	99	115	94	82	73	67	62	58	54
	350	14.0	117	137	112	97	86	79	73	68	64
	450	18.0	133	155	126	110	98	89	83	77	73
	550	22.0	147	171	140	121	108	99	92	86	81
	650	26.0	159	186	152	132	118	107	100	93	88
	750	30.0	171	200	163	141	126	115	107	100	94
	850	34.0	182	213	174	151	135	123	114	106	100
	950	38.0	193	225	184	159	142	130	120	113	106
	1050	42.0	203	237	193	167	150	137	126	118	112
	1150	46.0	212	248	202	175	157	143	132	124	117
	1250	50.0	221	258	211	183	163	149	138	129	122
6	250	10.0	90	105	86	75	67	61	56	53	50
	350	14.0	107	125	102	88	79	72	67	62	59
	450	18.0	121	141	115	100	89	82	76	71	67
	550	22.0	134	156	128	111	99	90	84	78	74
	650	26.0	145	170	139	120	107	98	91	85	80
	750	30.0	156	183	149	129	115	105	98	91	86
	850	34.0	166	194	159	137	123	112	104	97	92
	950	38.0	176	205	168	145	130	119	110	103	97
	1050	42.0	185	216	176	153	137	125	115	108	102
	1150	46.0	193	226	185	160	143	131	121	113	107
	1250	50.0	202	236	192	167	149	136	126	118	111
7	250	10.0	84	98	80	69	62	56	52	49	46
	350	14.0	99	115	94	82	73	67	62	58	54
	450	18.0	112	131	107	93	83	76	70	65	62
	550	22.0	124	145	118	102	92	84	77	72	68
	650	26.0	135	157	128	111	100	91	84	79	74
	750	30.0	145	169	138	120	107	98	90	85	80
	850	34.0	154	180	147	127	114	104	96	90	85
	950	38.0	163	190	155	135	120	110	102	95	90
	1050	42.0	171	200	163	141	126	115	107	100	94
	1150	46.0	179	209	171	148	132	121	112	105	99
	1250	50.0	187	218	178	154	138	126	117	109	103

NO: ↑REV. DESCRIPTION: ↑DATE: ↑REV.BY: ↑CHKD. BY: ↑APPD. BY:

DRAWN BY: MSJ	DATE: 8/5/98	ROHN Industries, Inc.
CHECKED BY: HA	DATE: 8/5/98	
APP'D ENG: TS	DATE: 8/10/98	JRM ALLOWABLE
APP'D SALES:	DATE:	
FILE NUMBER:		ANTENNA AREAS
DRAWING NUMBER: A981812-1 OF 9		

JRM ALLOWABLE ANTENNA AREAS

EFFECTIVE PROJECTED AREA (EPA) (FT^2)	BALLAST (LBS)	ZERO VELOCITY LOAD (PSF)	Vs (MPH)	Vmax AT CENTROID OF PROJECTED AREA (MPH)							
				H=2FT	H=3FT	H=4FT	H=5FT	H=6FT	H=7FT	H=8FT	H=9FT
8	250	10.0	78	91	75	65	58	53	49	46	43
	350	14.0	92	108	88	76	68	62	58	54	51
	450	18.0	105	122	100	87	77	71	65	61	58
	550	22.0	116	135	111	96	86	78	72	68	64
	650	26.0	126	147	120	104	93	85	79	74	69
	750	30.0	135	158	129	112	100	91	85	79	75
	850	34.0	144	168	137	119	106	97	90	84	79
	950	38.0	152	178	145	126	113	103	95	89	84
	1050	42.0	160	187	153	132	118	108	100	94	88
	1150	46.0	168	196	160	138	124	113	105	98	92
	1250	50.0	172	204	167	144	129	118	109	102	96
10	250	10.0	70	82	67	58	52	47	44	41	38
	350	14.0	83	97	79	68	61	56	52	48	46
	450	18.0	94	110	89	77	69	63	59	55	52
	550	22.0	104	121	99	86	77	70	65	61	57
	650	26.0	113	132	107	93	83	76	70	66	62
	750	30.0	121	141	115	100	89	82	76	71	67
	850	34.0	129	151	123	106	95	87	80	75	71
	950	38.0	136	159	130	113	101	92	85	80	75
	1050	42.0	143	167	137	118	106	97	89	84	79
	1150	46.0	150	175	143	124	111	101	94	88	83
	1250	50.0	156	183	149	129	115	105	98	91	86
12	250	10.0	64	75	61	53	47	43	40	37	35
	350	14.0	75	88	72	62	56	51	47	44	42
	450	18.0	86	100	82	71	63	58	53	50	47
	550	22.0	95	111	90	78	70	64	59	55	52
	650	26.0	103	120	98	85	76	69	64	60	57
	750	30.0	110	129	105	91	82	75	69	65	61
	850	34.0	118	137	112	97	87	79	73	69	65
	950	38.0	124	145	119	103	92	84	78	73	68
	1050	42.0	131	153	125	108	97	88	82	76	72
	1150	46.0	137	160	131	113	101	92	85	80	75
	1250	50.0	143	167	136	118	105	96	89	83	79
14	250	10.0	59	69	56	49	44	40	37	35	33
	350	14.0	70	82	67	58	52	47	44	41	38
	450	18.0	79	93	76	65	59	53	49	46	44
	550	22.0	88	102	84	72	65	59	55	51	48
	650	26.0	95	111	91	79	70	64	59	56	52
	750	30.0	102	120	98	85	76	69	64	60	56
	850	34.0	109	127	104	90	80	73	68	64	60
	950	38.0	115	135	110	95	85	78	72	67	63
	1050	42.0	121	141	115	100	89	82	76	71	67
	1150	46.0	127	148	121	105	94	85	79	74	70
	1250	50.0	132	154	126	109	98	89	82	77	73

NO:	REV. DESCRIPTION:	DATE:	REV.BY:	CHKD. BY:	APPD. BY:

DRAWN BY: MSJ	DATE: 8/5/98	ROHN Industries, Inc.
CHECKED BY: HA	DATE: 8/5/98	JRM ALLOWABLE
APP'D ENG: TS	DATE: 8/10/98	ANTENNA AREAS
APP'D SALES:	DATE:	
FILE NUMBER:		
DRAWING NUMBER:A981812-2 OF 9		

ROHN™ Products

Commercial & Residential Mounts

Products for a Growing World of Technology

ROHN™ Products

Mounts

For Today's Communication Needs

Not only can ROHN provide you with towers and poles to meet the stringent demands of today's communication industry, we can also provide the mounts and fittings needed to complete the project. ROHN offers many different models of mounts suitable for Satellites, Cellular and PCS applications, as well as mounts for amateur radio and television. The three categories of mounts offered by ROHN are Non-Penetrating Roof Mounts, Commercial Mounts and Residential Mounts.

ROHN manufactures roof and wall mounts for large aperture satellite antennas, including non-penetrating roof mounts for antennas up to 3 meters in diameter. ROHN also manufactures a compete line of towers and mounts for UHF-VHF home TV antennas. Mounts include tripods, telescoping masts, and various wall mounts.

ROHN Quality

ROHN Mounts are all designed and engineered to handle the job of getting above ground interference. Each mount has been researched and developed to serve a specific purpose. With professionally engineered construction and Hot Dip Galvanizing after construction, you can be assured you're getting a virtually maintenance free product built to the highest standards. And because of our Hot Dip Galvanizing after fabrication, our mounts won't rust.

General Assembly Information

Roof Mounts

Select a location on your roof where all Tripod or Quadpod feet are over rafters. Use lag screws of sufficient length to go through the roof surfacing material and into the rafter. A minimum of two lag screws per foot is required. If a rafter is not available, additional reinforcement should be added under the roof surface for support. Do not attach feet to roof surface only. Apply roofing compound under and around the feet for moisture sealing. Under no circumstances should anyone attempt to climb upon a Tripod or a Quadpod.

Wall Mounts

Select a location where braces will attach to a structural member (wall stud, sill plate, etc). Use lag screws of sufficient length to go through the wall sheathing and or siding and into the structural member. Apply sealant as required for moisture protection.

Facia Mounts

Make certain your facia is capable of supporting the loads created by your antenna and mount installation. Select a location where the braces will attach to a structural member. Use lag screws of sufficient length to go through the facia and any other sheathing or siding and into the structural member. Upper and lower brackets should be spaced far enough apart to support loads created by the antenna and mast.

Mast Length

Do not attach any mast over 10 feet in length without using guys in three or four directions.

Antenna Load

Any antenna over 2 square feet in size mounted within 10 feet of mast must be guyed.

Commercial Mounts

Roof Mount-TRT AG2

The ROHN TRT AG2 is a heavy duty, commercial quality roof mount. Features include:

- 5′ total effective height
- Shipped completely knocked-down for easy assembly in remote areas
- Extra length adjustable base feet for wide range of mounting conditions (anchor bolts not included) drilled to accept 3/8″ anchors
- Heavy duty steel construction
- Hot Dip Galvanized after fabrication
- 23 1/8″ O.D. mast pipe extending approximately 12″ above apex
- Ideal mount to include in antenna packages
- UPS shippable

The House Bracket Unit Pole Mount

The ROHN HBUPMTVRO is an inexpensive alternative to elaborate ground or yard mounts. In just three easy steps, the HBUPMTVRO can be mounted to the side or end of a building, and it can be fastened to the roof with an optional Roof Mounting Kit.

Capable of receiving up to 5" O.D. maximum, optional ROHN TVRO Mounting Poles, and utilizing the ROHN TVRO ground base, your selected antenna will be elevated above common ground mounted interference hazards. Additional features include:

- Hot Dip Galvanized after fabrication
- Will support most TVRO, PCS, Cellular and Microwave antennas
- Optional Roof Mounting Kit
- Easy three-step installation
- Model: HBUPMTVRO
- Adjustable from 0″-36″ out from wall
- UPS shippable

The Pole Support Mount

The ROHN Pole Support Mount (PSM) can be mounted to the side or end of a building in easy one-step installation. Capable of receiving all sizes of the optional ROHN TVRO mounting poles and utilizing the ROHN TVRO ground base, your TVRO antenna will be elevated above common ground mounting hazards like trees, bushes, houses, etc... Additional features include:

- Hot Dip Galvanized after fabrication
- Will support most TVRO, PCS, Cellular and Microwave antennas
- Easy one-step installation
- Easy one-step installation
- Model: PSM
- UPS shippable

The Pole Support Mount

The ROHN Pole Wall Mount (PWM) is designed to support most Satellite, PCS, Cellular or Microwave antennas. With the use of 5′ - 7′ pipe, the ROHN PWM can be located so antenna and electronics can be easily reached and the pipe distance from the wall adjusts as needed. Additional features include:

- Hot Dip Galvanized after fabrication
- Accepts up to a 5 ½″ O.D. pipe
- Optional mounting hardware and pipe available
- Ideal for a variety of antennas
- Easy to reach antenna from rooftop
- Model: PWM
- UPS shippable

Wall Mounts

The ROHN Wall Mount (WM212) is designed to support most Satellite, PCS, Cellular, or Microwave type antennas. The ROHN WM212 can be located so antenna and electronics can be easily reached and the pipe distance fromthe wall adjusts as needed. Additional features include:

- Hot Dip Galvanized after fabrication
- Includes 5′ Long x 2″ I.D. x 2 ½″ O.D. schedule 40 mounting pipe
- Optional items include installation hardware (ROHN part #HMK18M or B12 stabilizer straps)
- Available without B12 stabilizer straps

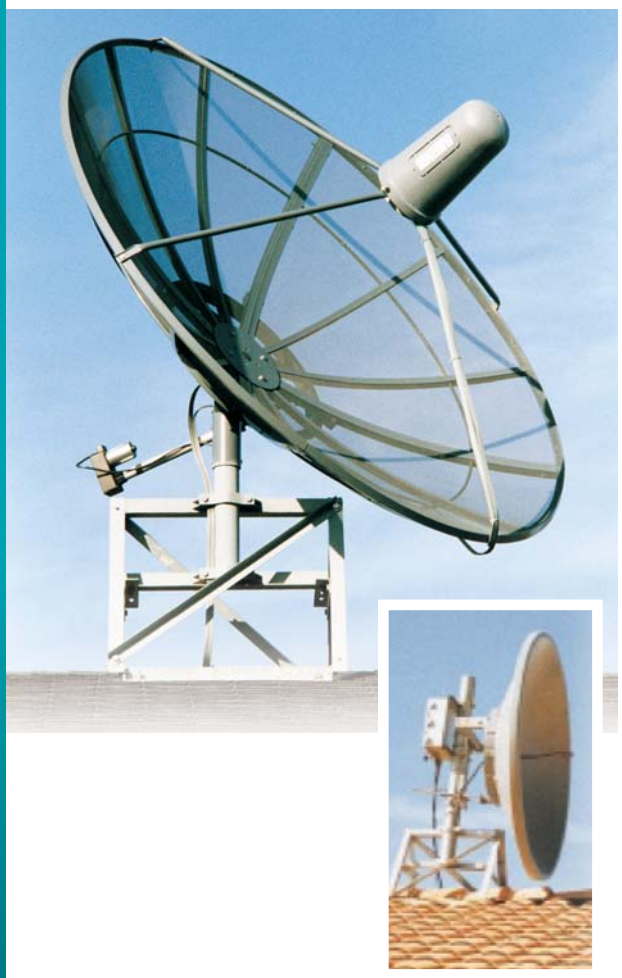

The Saw Horse Roof Mount

ROHN's Saw Horse Roof Mounts (SHRM) allow the placement of antennas on roof peaks or flat roofs, allowing them to be above interference created by close buildings and trees. At the same time, it frees up yard space, eliminates some zoning problems and increases security from theft and vandalism. The SHRM will adjust from a flat roof to any pitched roof up to 12"/12". And installation is easy because there's no need for concrete or burying cable. Additional features include:

- Hot Dip Galvanized after fabrication
- Will support most TVRO, PCS, Cellular and Microwave antennas
- Constructed of heavy angle material
- Easy one-step installation
- Model: SHRM
- UPS shippable
- Mounting pipe and installation hardware are optional

The Saw Horse Roof Mount

ROHN's Universal Roof Mount (URM) is capable of supporting most TVRO, PCS Cellular and Microwave antennas. The URM adapts to various roof pitches and the fully adjustable rear-leg allows for use on a flat or up to a 12"/12" pitched roof. Installation is easy because of the quick adaptability, plus there's no need for concrete or burying cable. At the same time, the URM frees up yard space, eliminates some zoning problems and increases security from theft and vandalism. Additional features include:

- Hot Dip Galvanized after fabrication
- Will support most TVRO, PCS Cellular and Microwave antennas
- Easy one-step installation
- Model: URM
- UPS shippable
- Mounting pipe and installation hardware are optional

Residential Mounts

The DBS Tower Mount

The DBS Tower Mount is perfect for today's new generation of reception dishes. Made for 25G towers, it's one of the latest additions to the complete line of ROHN antenna support products. Features include:

- Goes together quickly
- Minimum of bolted connections
- Angle steel cross members connect directly to the tower legs with easy to use U-bolts
- Available in Hot Dip Galvanized or pre-galvanized finish
- UPS shippable
- Disassembled, the lightweight mount stores in very small spaces with angle members nested
- Supports almost all major DBS antenna brands

The Gable End Mount

ROHN's new Gable End Mount is now even more versatile. It's designed to provide excellent support for off-air or wireless cable antennas, utilizing mast clamps capable of supporting up to 1 ½" masts (optional mast sizes are available from ROHN). The GEM is easily installed on the gable end of a house with no roof penetration required.

Gable End Mount Features:

- Galvanized Finish
- Constructed with a bottom support angle adjustable from 40" - 60"
- Versatile enough to install to almost any pitch roof
- Design has four attachment points on the facia board
- Mast brackets designed for 4" clearance from the facia
- Packaged in one box for convenience
- GEM (part number: GEM4060) Contains: 1 VWM4 (two brackets), 2 adjustable angles, 1 hardware package, lag screws

The Gable Pole Bracket

The ROHN Gable Pole Bracket is another inexpensive solution to supporting an elevated satellite antenna. It can be installed using any ROHN HMK, hardware mounting kit. Additional features include:

- Hot Dip Galvanized after fabrication
- Will support most TVRO, PCS, Cellular and Microwave antennas
- Constructed of high strength steel
- Adaptable to all gable ends
- UPS Shippable - 17 lb.
- Easy to install/Approx. 4' long
- Holds up to 5" standard pipe
- Model: GPB4

Heavy Duty All Steel Tri-Mast

ROHN's Trimast is ideal for conventional UHF-VHF or wireless cable antennas. Available in overall heights of 5' (part no. TM60) and 10' (part no. TM120), ROHN Trimasts can be installed to roof slope or peak.

- "Socket-lock" clamping device for fast and secure installation
- Features bolt-on removable swivel feet
- Includes pitch pads and lag screws
- Galvanized inside and out for lasting, durable finish
- Double base swivel feet help prevent twisting of the mast
- Conforms to most any roof slope

Tripod Roof Towers

ROHN Tripod Roof Towers feature universal mast clamp and support bracket. They arecompact folding for efficient storage and easy to install. Additional features include:

- Most TRT Snap-outs fold tightly for convenient storage
- Universal mast clamp capable of mounting up to 1 3/4" diameter mast
- Socket lock to hold the tightening bolt in place without turning
- Bolt-on swivel feet adjust to most any pitch roof
- Made of 1 1/4" tubular legs
- Installation is simple and fast by using lag screws in the base feet - securely anchoring the tower for long, trouble free service
- Lower mast support bracket
- Galvanized for long lasting corrosion protection
- Prevailing torque lock-nut is used on bolt-on feet
- Swing-Away mast support provides for quick and easy orientation before locking antenna in position
- Support has 3 set screws for clamping mast

Quadpod Roof Mounts

With ROHN Quadpod Roof Mounts, the mast pipe stays vertical whether it's installed on the sloped, peak, or flat portion of a roof. The extra leg pivots in the collar to allow for upright installation on the sloped part of a roof. The additional support of the leg also adds strength to the installation. ROHN Quadpods are ideal for wireless cable or off air channel antennas. Features include:

- Bolt-on swivel feet
- Folds down for convenient shipping and storage
- Pitch pads and lag screws included
- Galvanized and durable

Telescoping Masts

ROHN Telescoping Masts are designed for use as guyed or bracketed installations. All ROHN Telescoping Masts are galvanized and come assembled with hardware. The unique ROHN Rolled Edge Guy Rings and Clamps are already installed and erection is simply attaching guys or brackets, extending the sections, inserting the locking cotter pins, rotating the tubes to a locked position and tightening the clamps.

The unique ROHN design features interior tube flanging combined with a double crimped exterior tube to produce a stronger and more stable joint than most common masts. Disassembly is possible by pulling each section out through the bottom. Each section also extends deeper into the lower tubes than most designs, adding still further to the stability of the mast. Additional features include:

- 1 ¼" top section can accept many popular wireless cable, off air and other small antennas
- Exclusive ROHN Rolled Edge Guy Ring rotates to any direction on the mast and with five guy holes allows guying in nearly any direction
- Masts can be handled by one person
- Bracketed masts are ideal for limited space sites
- Slim design makes the ROHN mast unobtrusive in most installations

The Snake Mount®

The Snake Mount is designed to adapt. It will work as a universal wall mount, a pitched roof mount, or a peak roof mount for wireless cable, DBS and UHF/UVF antennas. The snake mount comes in two sizes, small and large. The Small Snake Mount (part number: SM125) has a 1 1/4" O.D. mast capable of supporting an antenna of 2 square feet projected area or less. The Large Snake Mount (part number: SM238) has a 2 3/8" O.D. mast capable of supporting up to a 1 meter antenna.

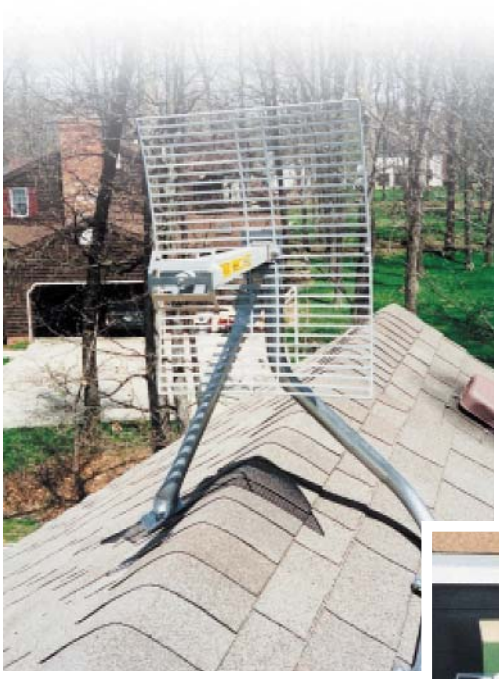

Additional Features of the ROHN Snake Mount®:

- Available in 11.4 h O.D. tubing or 23.8 h tubing (2 1/4" compatible)
- Universal mount for roof or wall installation
- Conforms to any stud spacing requirements
- Galvanized for ultimate rust protection
- Includes lag screws
- Low cost, lightweight, and UPS shippable
- Sleek, modern design
- Patented design

The Universal One-Legged Mount

The Universal One-Legged Mount may be the one and only mount that can be installed on any part of any building. This mount is designed for virtually all types of antennas - home, TV, MMDS, DBS and more (part number: 1LG). An optional chimney mounting kit will allow the One-Legged Mount to be installed on masonry chimneys (part number: 1LGCM). The One-Legged Mount can solve any mounting need.

Features include:

- A 1 ¼" O.D. mounting pipe
- Galvanized for ultimate rust protection
- Includes lag screws
- Optional chimney mounting kit available
- Low cost, low profile, lightweight, and UPS shippable
- Can be installed on any roof, wall or gable end

Wall Mounts

ROHN Wall Mounts for masonry, wood, metal and most other walls are designed to provide versatility. With six lengths, two widths and the ability to support up to a 2 3/4" O.D. mast, these mounts can be the perfect answer for nearly any setting. The mounts can be installed quickly and with minimum effort using up to 5/16" lag bolts on nearly any surface.*

All mounts are galvanized for durability, and constructed of lightweight, high strength ribbed flat stock steel. Masts are held in place with a unique "Anti-Twist" locking clamp to help ensure steady reception.

Additional Features include:

- Will extend beyond most residential roof overhangs
- Available in 4", 8", 12", 18", 24", and 30" stand-offs
- Available as single or double brackets
- UPS shippable

Upper brackets consist of horizontal members only. Lower brackets consist of horizontal members and one angled member for vertical support.

** Lag screws or attachment bolts must be ordered separately.*

Steel Tubing

ROHN Steel Tubing comes in a variety of end types, finishes, gauges and lengths. So whatever your needs, we have the steel tubing to fit every job.

End Types

Swaged - ROHN swaged tubing with locking joint is available in two finishes and four gauges. When tubing is swaged, the metal is compressed and made thicker so the joint is stronger than the original material. In fact, so strong that 18 ga. swaged tubing has the strength of most competitive 16 ga. tubing. Swaging also eliminates the "joint bulge" common with expanded tubing.

Expanded - A tube with an expanded end along with a tube with a plain end allows the tubes to be stacked.

Plain End - Tubes with a plain end cannot be stacked if they are used directly in a tripod, wall mount, etc.

Finishes

Hot Dip Galvanized - This tubing is fabricated from high strength steel - then immersed in molten zinc giving all surfaces, including the interior, an even coating of zinc for maximum corrosion protection. No seams, holes or edges are coated.

Pre-Galvanized - This tubing is made from a coil of steel which is galvanized at the steel mill, cut into strips, and then formed into a piece of tubing. Where the tubing is welded, zinc is sprayed over the weld to give it protection at that point. It does, however, have a slightly uncoated seam on the inside and ends.

Galvanized

Pre-Galvanized

Gauges

ROHN offers steel tubing in 16, 18, and 20 gauges.

Lengths

Steel tubing lengths are available from 2 ½" to 10'.

Blank

Form No. 96-2812C

TELESCOPING MASTS

For Use As Guyed or Bracketed Installations

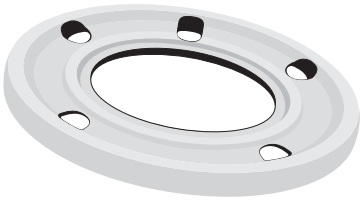

The exclusive ROHN Rolled Edge Guy Ring rotates to any direction on the mast, and with five guy holes, allows guying in nearly any direction.

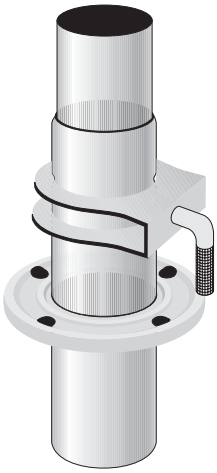

Details

Upper Joints

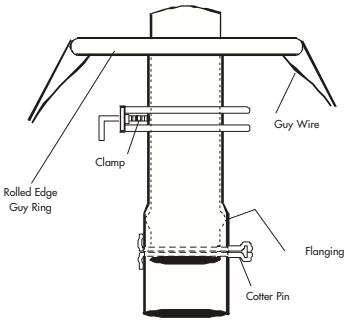

Lower Joints

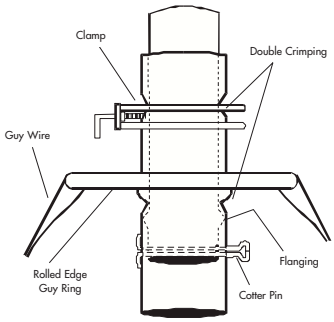

Specifications

Part Number	Bottom Section	Top Section	Mid Sections	Bottom Section O.D.	Top Section O.D.	Weight
H20	18 ga.	16 ga.	18 ga.	1-1/2″	1-1/4″	17
H30	18 ga.	16 ga.	18 ga.	1-3/4″	1-1/4″	26
H40	18 ga.	16 ga.	18 ga.	2″	1-1/4″	35
H50	18 ga.	16 ga.	18 ga.	2-1/4″	1-1/4″	46
H70	16 ga.	16 ga.	18 ga.	2-3/4″	1-1/4″	74
E20	20 ga.	18 ga.	20 ga.	1-1/2″	1-1/4″	14
E30	20 ga.	18 ga.	20 ga.	1-3/4″	1-1/4″	22
E40	20 ga.	18 ga.	20 ga.	2″	1-1/4″	30
E50	18 ga.	18 ga.	20 ga.	2-1/4″	1-1/4″	39

Last two digits in the part number references the total length of all tubing in the mast. Due to overlap in joints actual height above base will be less.
Masts have all hardware except base.
All installations must be bracketed or guyed. Brackets, guys and base are not included and should be ordered separately as needed for each type of installation.
Extend each section carefully, taking extra caution to prevent sections from pulling apart.
Do not extend mast horizontally and then rotate up from hinged base.
Sections can be disassembled through the lower end of the mast.
Telescoping masts are not recommended for commercial, ham, CB or beam antennas.
Refer to ROHN Price List for current prices.
See ROHN Safety Brochure 93-2754C for safety information. This brochure is available free from ROHN.

THE GTMBL BASE PLATE
For Mast Installations

The GTMBL Base Plate features:

- More surface area to help prevent sinking
- A longer stake for a more stable installation (especially in areas with poor soils)
- Two locations for mast placement including one that hugs the wall
- Long lasting galvanized rust prevention

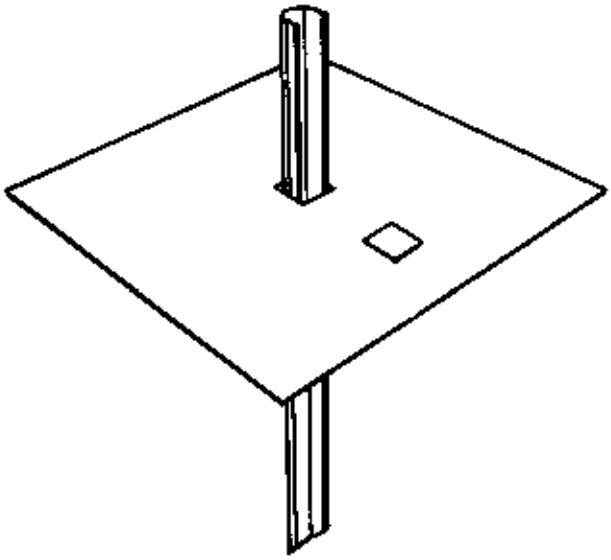

ROHN is now manufacturing a telescoping mast base plate called the GTMBL Base Plate. The GTMBL Base Plate is a full 10 inches square and features two locations for the stake and telescoping mast. The first location is the center and the second location is two inches from one side for installations in which the mast needs to be close to the wall. The drive stake is a full 18 inches in length.

The GTMBL Base Plate is now available for immediate shipment::

Part Number	Description
GTMBL	Base Plate
GTMBLX	Base Plate Individually Boxed

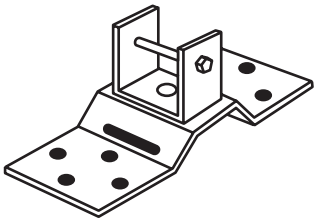

Universal Mast Base
Universal mast base can be used anywhere! Slip bolt through already drilled hole in all ROHN telescoping masts and fasten to U-piece. Can be rotated and mast can be raised from any angle. Entire base is galvanized for the finest weather protection available.

Part No.	WPSC	SC
2UMBX*	40 lbs.	25

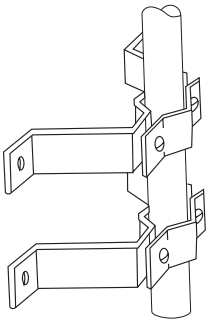

Wall Mounts
VWM4 and VWM4X are economy mounts made of heavy gauge zinc plated steel for close mounting (4" clearance). Installation hardware included. WM4 and WM4X are extra heavy deluxe mounts made of heavy gauge, galvanized steel (4" clearance). Packed with carriage bolts and 1-3/4" lag screws.

Part No.	Description	WPSC	SC
VWM4	Holds 1-1/4"-1-3/4" masts	43 lbs.	36
VWM4X*	Holds 1-1/4"-1-3/4" masts	34 lbs.	25
WM4	Holds 1-1/4"-2-1/4" masts	34 lbs.	20
WM4X*	Holds 1-1/4"-2-1/4" masts	47 lbs.	25

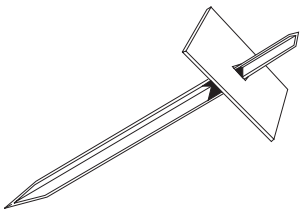

Ground Mounts
Sturdy, galvanized, drive-in type mount for all ROHN telescoping masts and 1-1/4" tubing and 1-1/2" tubing.

Part No.	WPSC	SC
GTMB	24 lbs.	12
GTMBX*	20 lbs.	10
GTMBL	45 lbs.	25

(6" x 15" plate for poor soil conditions)

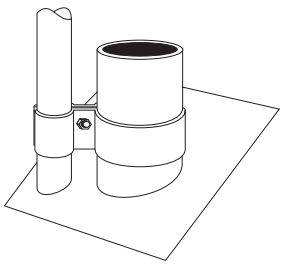

Vent Mounts
For mounting TV antenna on vents up to 2-1/4" diameter. Made of extra heavy guage steel, galvanized. Accepts masts up to 1-1/4" diameter. Complete with necessary hardware.

Part No.	Description	WPSC	SC
VTMT	Vent Mount	35	25

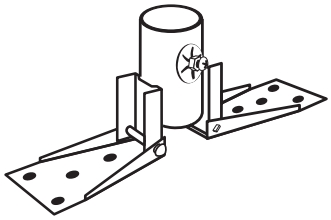

Universal Ridge Mounts
Completely assembled for quick and easy flat roof or peaked roof installation. Allows tall masts to be swung up along the ridge of the roof.

Part No.	Description	WPSC	SC
UM20	Holds masts to 1-1/2" dia.	32 lbs.	25
UM30	Holds masts to 1-3/4" dia.	34 lbs.	25
UM40	Holds masts to 2" dia.	35 lbs.	25
UM50	Holds masts to 2-1/4" dia.	36 lbs.	25

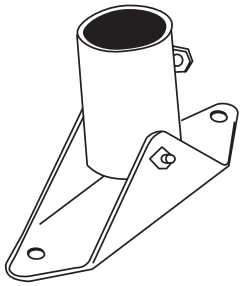

Economy Angle Base Mount
Clamp type base mount constructed of heavy gauge galvanized steel, and designed for the 5' to 10' installation job. Completely assembled to save time and money.

Part No.	WPSC	SC
SB125	42 lbs.	100

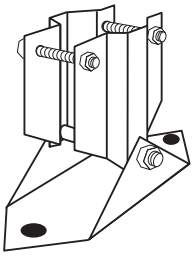

Universal Roof Mount
Features galvanized finish and heavy duty steel throughout. Completely assembled. Holds all ROHN telescoping masts, 1-1/4" tubing and 1-1/2" tubing.

Part No.	WPSC	SC
ETMB	13 lbs.	12

* "X" in part number designates item is skin packed

WPSC = Weight Per Standard Carton
SC = Standard Carton (Master Carton)

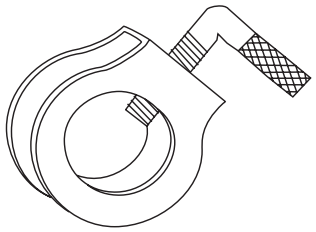

Mast Clamps

Galvanized mast clamps avvailable in a wide variety of sizes to fit every mast. Comes complete with L-bolt and nut.

Part No.	Description	WPSC	SC
C1A	For 1-1/4″ masts	13 lbs.	100
C2A	For 1-1/2″ masts	13 lbs.	100
C3A	For 1-3/4″ masts	13 lbs.	100
C4A	Fir 2″ masts	13 lbs.	100
C5A	For 2-1/4″ masts	13 lbs.	100

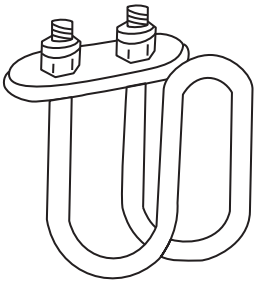

Complete clamp assembly to fasten cross bars to 1-1/4″ mast.

Part No.	WPSC	SC
TB5125BA	54 lbs.	100

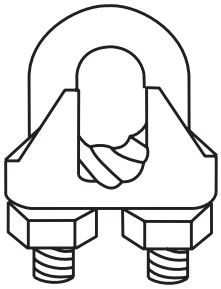

Cable Clamps

Heavy gauge steel. Fits 1/8″ to 3/16″ guy wire.

Part No.	Description	WPSC	SC
1/8CCM	1/8″ small size-electro-galvanized	3 lbs.	100
3/16CCM	3/16″standard size-hot dip galvanized	5 lbs.	100

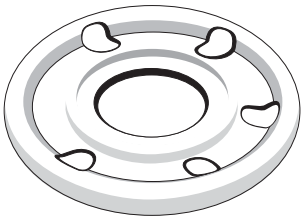

Rolled Edge Guy Rings

Part No.	Description	WPSC	SC
GR1	For 1-1/4″ masts	17 lbs.	100
GR2	For 1-1/2″ masts	17 lbs.	100
GR3	For 1-3/4″ masts	17 lbs.	100
GR4	For 2″ masts	20 lbs.	100
GR5	For 2-1/4″ masts	20 lbs.	100

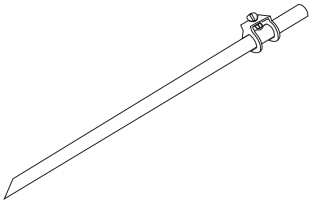

Ground Rods

Heavy gauge steel rod with sharp point for easy installation. Ground wire clamp assembled on rod.

Part No.	Description	WPSC	SC
GR384	4′, 3/8″ dia. copper plated	42 lbs.	25
GR384Z	4′, 3/8″ dia. galvanized	42 lbs.	25
GR386	6′, 3/8″ dia. copper plated	53 lbs.	25
GR386Z	6′, 3/8″ dia. galvanized	53 lbs.	25

Lag Screws

Steel, zinc plated lag screws especially made for TV antenna installations and brackets.

Part No.	Description	WPSC	SC
2550	1/4″ x 1-1/2″ long	2 lbs.	100
8061	5/16″ x 1-3/4″ long	3-1/2 lbs.	100
220352	1/4″ x 2″ Type A wood screw with hex washer head	10lbs.	100

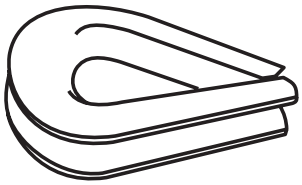

Thimble
Prevents guy wire from fraying and loosening.

Part No.	Description	WPSC	SC
1/4TH	For all sizes wire up to 1/4"	4 lbs.	100

1/4" Turnbuckle
Turnbuckle, 1-1/4" x 4" forged eye to eye. Ideal for guyed telescoping masts and tubing.

Part No.	Description	WPSC	SC
1/4TBE&E	1/4" x 4" Turnbuckle	23 lbs.	100

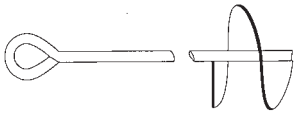

Screw Anchor
Hot dip galvanized screw anchor ideal for guyed telescoping masts and tubing.

Part No.	Description
GAS430	30" long, 1/2" dia. rod 4" dia. helix, 3lbs. each. Only bulk available

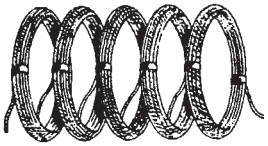

Galvanized Guy Wire
Heavy galvanized steel guy wire. Rust proof. Non-tangling 20 50' interconnected coils. Packaged 1000' per box.

Part No.	Description	WPSC	SC
618	6 strand, 18 gauge	32 lbs.	1000 ft.
620	6 strand, 20 gauge	19 lbs.	1000 ft.

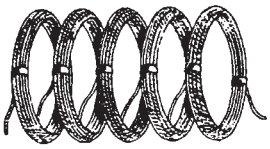

Clear Coated Guy Wire
Galvanized wire in a clear vinyl coating. Non-tangling 20 50' interconnected coils. Packaged 1000' per box.

Part No.	Description	WPSC	SC
1/8HSCC	6 strand, 20 gauge	29 lbs.	1000 ft.

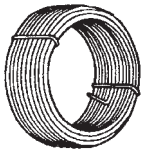

Ground Wire
Uncoated aluminum ground wire grounds mast from lightning and electrical disturbance.

Part No.	Description	WPSC	SC
AGW8	No. 8 solid wire	16 lbs.	1000 ft.

1…2…3…4…5…6…7…8…9…10 SECONDS!

"There is no quicker, more cost effective, and easier way to terminate guy wire."

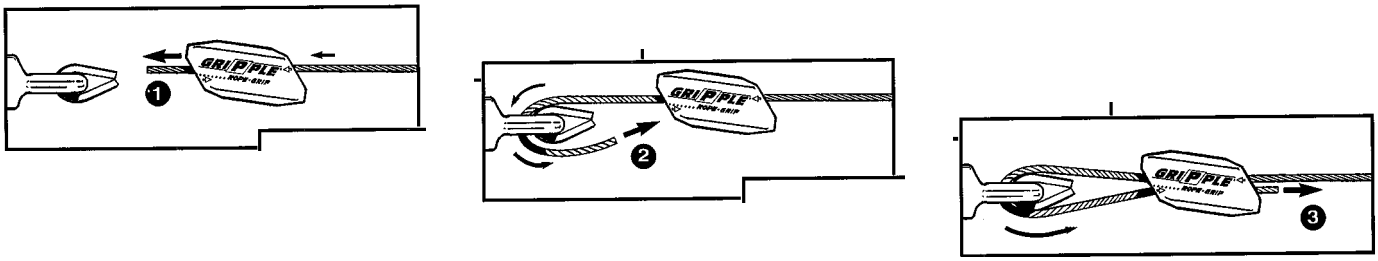

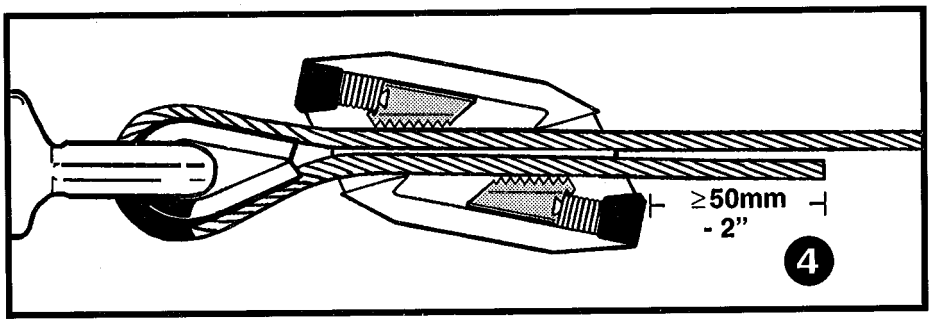

ROHN Gripple are available for the following guy wire:

- 620, 618, and 1/8HSCC — for guyed telescoping masts and tubing
- 3/16EHS and 1/4EHS — 3/16" and 1/4" guy wire

The Gripple replaces the need for a turnbuckle and cable clamp. (It is not designed to suspend or lift persons).

Properly installed Gripple Rope Gripps provide approximately 85% of the nominal breaking strength of the steel cable to which they are applied. To determine the actual holding strength of the Gripple, a pull test must be made. This will determine if the Gripple is suitable for your application. Use appropriate safety factor when calculating working load limit. Gripple Rope Gripps are not to be used in a load lifting capacity.

Part #	ROHN Guy Wire	Bag Quantity
61820GRPL	620 618 1/8HSCC	10
3/16Gripple	3/16EHS	8
1/4Gripple	1/4EHS	8

Apply up to 600 lb. tension using the long-handled Grippler tool.
Part # Grippler

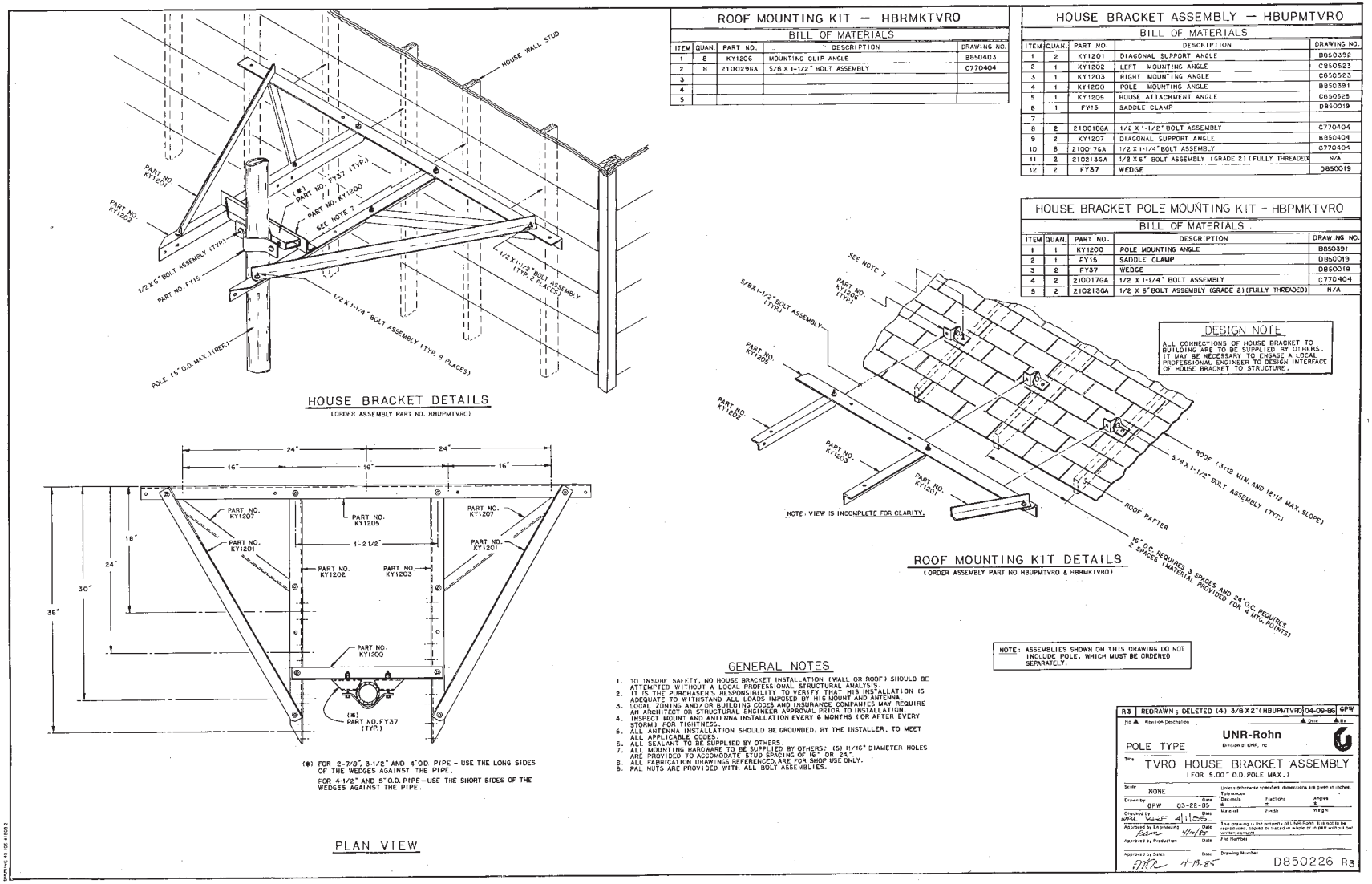

ROOF MOUNTING KIT — HBRMKTVRO

BILL OF MATERIALS

ITEM	QUAN.	PART NO.	DESCRIPTION	DRAWING NO.
1	8	KY1206	MOUNTING CLIP ANGLE	B850403
2	8	210029GA	5/8 X 1-1/2" BOLT ASSEMBLY	C770404
3				
4				
5				

HOUSE BRACKET ASSEMBLY — HBUPMTVRO

BILL OF MATERIALS

ITEM	QUAN.	PART NO.	DESCRIPTION	DRAWING NO.
1	2	KY1201	DIAGONAL SUPPORT ANGLE	B850392
2	1	KY1202	LEFT MOUNTING ANGLE	C850523
3	1	KY1203	RIGHT MOUNTING ANGLE	C850523
4	1	KY1200	POLE MOUNTING ANGLE	B850391
5	1	KY1205	HOUSE ATTACHMENT ANGLE	C850525
6	1	FY15	SADDLE CLAMP	D850019
7				
8	2	210016GA	1/2 X 1-1/2" BOLT ASSEMBLY	C770404
9	2	KY1207	DIAGONAL SUPPORT ANGLE	B850404
10	8	210017GA	1/2 X 1-1/4" BOLT ASSEMBLY	C770404
11	2	210213GA	1/2 X 6" BOLT ASSEMBLY (GRADE 2) (FULLY THREADED)	N/A
12	2	FY37	WEDGE	D850019

HOUSE BRACKET POLE MOUNTING KIT - HBPMKTVRO

BILL OF MATERIALS

ITEM	QUAN.	PART NO.	DESCRIPTION	DRAWING NO.
1	1	KY1200	POLE MOUNTING ANGLE	B850391
2	1	FY15	SADDLE CLAMP	D850019
3	2	FY37	WEDGE	D850019
4	2	210017GA	1/2 X 1-1/4" BOLT ASSEMBLY	C770404
5	2	210213GA	1/2 X 6" BOLT ASSEMBLY (GRADE 2) (FULLY THREADED)	N/A

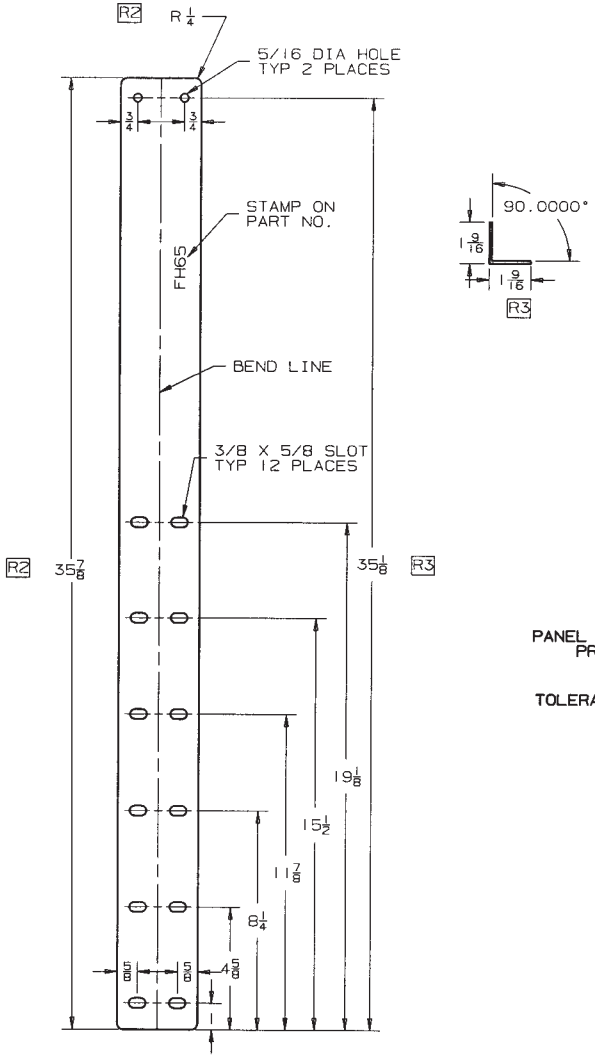

FH65

PANEL 3 X 12GA X 35-7/8
PREGALVANIZED

TOLERANCES: +/- 1/16"

BILL OF MATERIAL

HWGEM4060	GEM4060 (R4)	FH83 (R5)	PART NO	DESCRIPTION		DWG NO
	2		FH23	MAST MOUNT BRACKET 10-9/16 X 1 X 10GA	PG	C791451
R6 2			FH28	SADDLE CLAMP	PG	B800961
2			JR42	U-BOLTS 1/4 X 1-7/8 V-BTM	ZP	NO DWG
4			240005	NUT 1/4 HEX	ZP	NO DWG
1			220352PK4 R2	SCREW 1/4 X 1-1/2 AB SMS	ZP	NO DWG
4			250029	LOCK WASHER 5/16 INT	ZP	NO DWG
4			220205	BOLT 5/16 X 3/4 CARR	ZP	NO DWG
4			240014	NUT 5/16 HEX	ZP	NO DWG
	2		FH65	PANEL 3 X 12GA X 35-7/8	PG	C940022
	1		710175 R2	CARTON FOR GEM4060		
1			FLABEL	LABEL		
		1	FORM912593CR1	LITERATURE SHEET		
		1	FORM932754C-A	SAFETY INFORMATION SHEET		
1			720004	6 X 9 POLY BAG		
		1	720006	9 X 13 POLY BAG		
	1		740186	LABEL ROHN P/N GEM4060		
	1		FH83	LITERATURE PACKAGE FOR GEM4060		C940022
	1		HWGEM4060	HDWE PACKAGE FOR GEM4060	PG	C940022
			GEM4060	ADJUSTABLE MAST SUPPORT	PG	C940022

R6	QTY 2 WAS 3 FOR FH28	8-12-98	AMD	
R5	ADDED FH83 LIT PACK TO BOM OF GEM4060	5-8-96	MAH	TLO/BK
R4	ADDED HDWE PKG TO BOM HWGEM4060	11-8-95	TLO	MAH/BH PDC
R3	DIMENION 35-1/8 WAS 35-1/4 1-9/16 WAS 1-1/2	10-18-94	MAH	PJP/KSA BH
R2	CHANGED DIM & ADDED NOTES 2550 TO 220352, 710175 WAS 710172	7-26-94	SDM	PDC
R1	2550 SCREW 1/4 X 1-1/2 AB SMS WAS 8061 LAG SCREW 5/16 X 1-3/4	3-18-94	MAH	PDC

ROHN
FRANKFORT, INDIANA 46041

Title
GEM4060-ADJUSTABLE MAST SUPPORT

Scale: NONE
Drawn by: MAH — Date: 02-08-94
Checked by: MD — Date: 02-08-94
Approved by Engineering — Date
Approved by Production: MAC/MR — Date: 02-09-94
Approved by Sales — Date
Drawing Type : FAB

Unless otherwise specified, dimensions are given in inches. Tolerances are as noted.

Material | Finish | Weight

File Number

Drawing Number
C940022R6

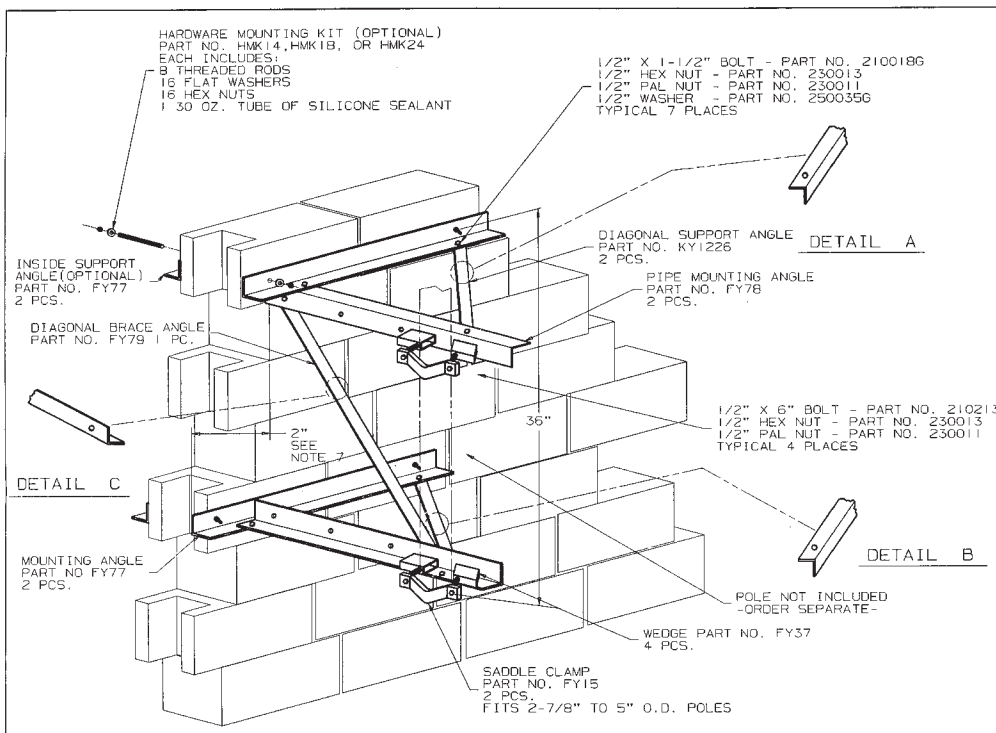

NOTE

1. IT IS THE PURCHASER'S RESPONSIBILIY TO VERIFY THAT HIS INSTALLATION AND BUILDING STRUCTURE ARE ABLE TO WITHSTAND ALL LOADS IMPOSED BY HIS ANTENNA SYSTEM.
2. ANTENNA INSTALLATIONS SHOULD BE GROUNDED BY THE INSTALLER TO MEET ALL APPLICABLE CODES.
3. INSPECT THE MOUNT AND ANTENNA EVERY 6 MONTHS.
4. OPTIONAL ROHN HARDWARE MOUNTING KITS MAY BE PURCHASED SEPARATELY FROM ROHN, (PART NOS.: HMK14, HMK18, HMK24).
5. OPTIONAL INSIDE MOUNTING ANGLES MAY BE PURCHASED SEPARATELY FROM ROHN, (PART NO.: FY77).
6. ASSEMBLY SHOWN DOES NOT INCLUDE THE POLE, WHICH MAY BE PURCHASED SEPARATELY FROM ROHN.
7. IF THE POLE IS TO BE INSTALLED PLUMB, THE LOWER MOUNTING ANGLE SHOULD BE MOVED 2" MORE TO THE LEFT, THAN THE TOP MOUNTING ANGLE, PRIOR TO ATTACHING THE MOUNT TO THE BUILDING.
8. IF THE POLE IS MOUNTED 15-3/4" FROM THE BUILDING, USE THE EXTRA 1/2" X 1-1/2" BOLT ASSEMBLY TO FASTEN THE DIAGONAL BRACE TO THE LOWER MOUNTING ANGLE.
9. PAL NUTS ARE INCLUDED WITH THE BOLT ASSEMBLIES AND ARE TO BE INSTALLED WITH THE CONCAVE SURFACE AGAINST THE STANDARD NUT.
10. TO OBTAIN MAXIMUM CAPACITY OF THE PWM, BOLTS SHOULD BE TIGHTENED IN ACCORDANCE WITH AISC RECOMMENDATIONS.
11. ALL PARTS ARE HOT DIP GALVANIZED AFTER FABRICATION.
12. REFER TO ENGINEERING REPORT 870102 FOR PWM ENGINEERING DATA.
13. ANGLES MUST BE POSITIONED AS SHOWN IN DETAILS A, B, AND C FOR INSTALLATION.

BILL OF MATERIAL

QTY	PART NO	DESCRIPTION
2	FY77	MOUNTING ANGLE
2	FY78	PIPE MOUNTING ANGLE
2	KY1226	DIAGONAL SUPPORT ANGLE
1	FY79	DIAGONAL BRACE ANGLE
2	FY15	SADDLE CLAMP
4	FY37	WEDGE
1	FYS45	HARDWARE KIT

HARDWARE KIT CONTENTS

QTY	PART NO	DESCRIPTION
8	210018G	1/2" X 1-1/2" BOLT
4	210213G	1/2" X 6" BOLT
12	230013	1/2" HEX NUT
12	230011	1/2" PAL NUT
8	250035G	1/2" FLAT WASHER

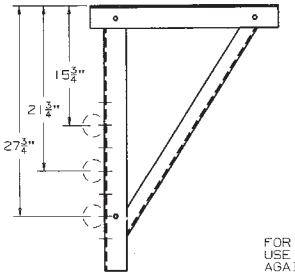

PLAN VIEW

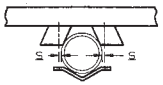

FOR 4-1/2" AND 5" O.D. POLES, USE THE SHORT SIDE OF THE WEDGE AGAINST THE POLE

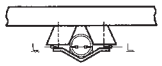

FOR 2-7/8", 3-1/2", AND 4" O.D. POLES, USE LONG SIDE OF THE WEDGE AGAINST THE POLE.

UNR-ROHN
Division of UNR, Inc.

Title: POLE WALL MOUNT - PWM

Scale: NONE
Unless otherwise specified, dimensions are given in inches. Tolerances are as noted.
Drawn by: BGA — Date: 1-7-88
Checked by: KA/WDJ — Date: 1-8-88
Approved by Engineering — Date
Approved by Production: TS — Date: 1-15-94
Approved by Sales — Date
Material — Finish — Weight

File Number
Drawing Number: D850065R8
Drawing Type: CATALOG

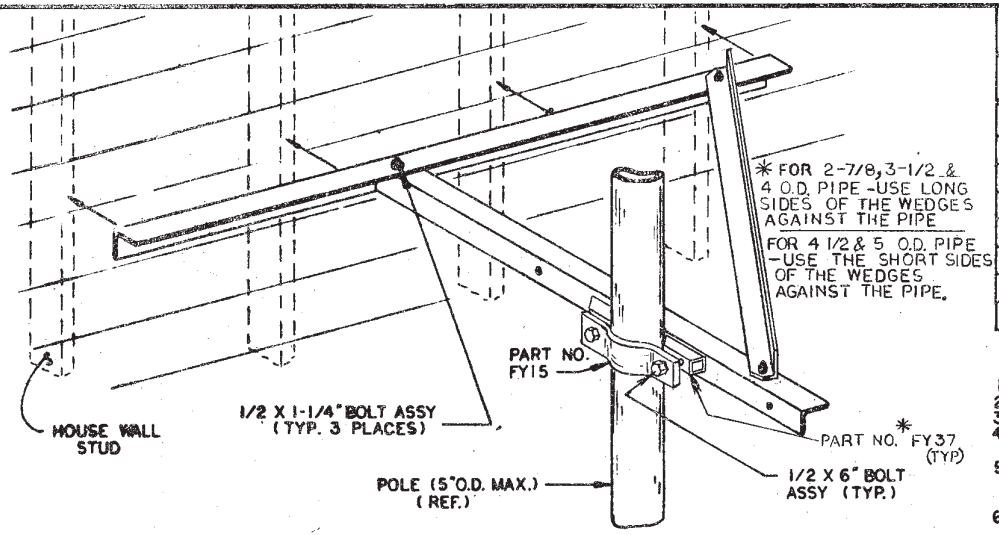

POLE SUPPORT MOUNT ASSEMBLY – PSM

BILL OF MATERIALS

ITEM	QUAN.	PART NO.	DESCRIPTION	DRAWING NO.
1	1	KY1224	HOUSE MOUNTING ANGLE	B850520
2	1	KY1225	PIPE MOUNTING ANGLE	B850521
3	1	KY1226	DIAGONAL SUPPORT ANGLE	B850522
4	1	FY15	SADDLE CLAMP	D850019
5	2	210213GA	1/2 X 6" BOLT ASSY (FULLY THREADED)	N/A
6	3	210017GA	1/2 X 1-1/4" BOLT ASSY	C770404
7	2	FY37	WEDGE	D850019

GENERAL NOTES

1. PAL NUTS ARE PROVIDED WITH ALL BOLT ASSEMBLIES.
2. ALL SEALANT, IF REQUIRED, TO BE SUPPLIED BY OTHERS.
3. ALL FABRICATION DRAWINGS REFERENCED, ARE FOR SHOP USE ONLY.
4. TO INSURE SAFETY, NO POLE SUPPORT MOUNT INSTALLATION SHOULD BE ATTEMPTED WITHOUT A LOCAL PROFESSIONAL STRUCTURAL ANALYSIS.
5. IT IS THE PURCHASER'S RESPONSIBILITY TO VERIFY THAT HIS INSTALLATION IS ADEQUATE TO WITHSTAND ALL LOADS IMPOSED BY HIS MOUNT AND ANTENNA.
6. LOCAL ZONING AND/OR BUILDING CODES AND INSURANCE COMPANIES MAY REQUIRE AN ARCHITECT OR STRUCTUAL ENGINEER APPROVAL PRIOR TO INSTALLATION.
7. ALL MOUNTING HARDWARE TO BE SUPPLIED BY OTHERS. (5) 11/16" DIA. HOLES ARE PROVIDED TO ACCOMODATE STUD SPACING OF 16" OR 24".
8. INSPECT MOUNT AND ANTENNA INSTALLATION EVERY 6 MONTHS (OR AFTER EVERY STORM) FOR TIGHTNESS.
9. ALL ANTENNA INSTALLATIONS SHOULD BE GROUNDED, BY THE INSTALLER, TO MEET ALL APPLICABLE CODES.

R1	ADDED TWO FY37 WEDGES	10-08-85 GPW

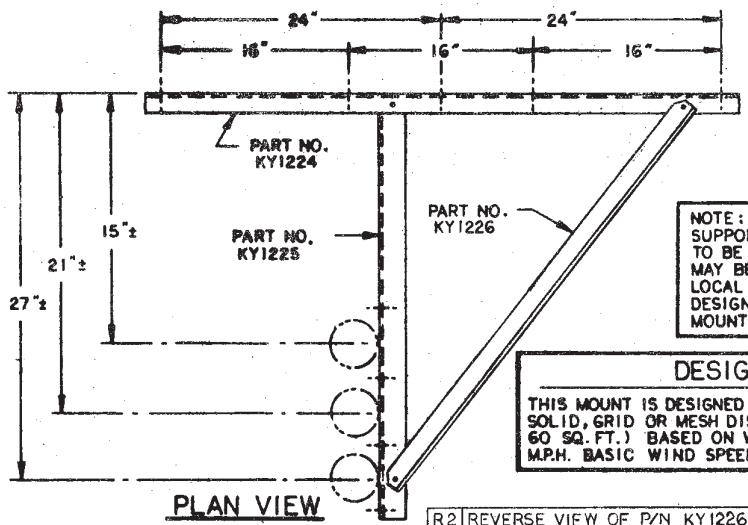

PLAN VIEW

NOTE: ASSEMBLY SHOWN DOES NOT INCLUDE POLE, WHICH MUST BE ORDERED SEPARATELY.

NOTE: ALL CONNECTIONS OF POLE SUPPORT MOUNT TO BUILDING ARE TO BE SUPPLIED BY OTHERS. IT MAY BE NECESSARY TO ENGAGE A LOCAL PROFESSIONAL ENGINEER TO DESIGN INTERFACE OF POLE SUPPORT MOUNT TO STRUCTURE.

DESIGN NOTE

THIS MOUNT IS DESIGNED TO SUPPORT A MAX. 8' DIA. SOLID, GRID OR MESH DISH (EFFECTIVE PROJ. AREA = 60 SQ. FT.) BASED ON WIND LOAD OF A.N.S.I. (70 M.P.H. BASIC WIND SPEED) A58.1, EXPOSURE "B".

R2	REVERSE VIEW OF P/N KY1226	5-15-87 EC

No.	Revision Description	Date	By

UNR-Rohn

Title: TVRO POLE SUPPORT MOUNT ASSY
(FOR 5.00" O.D. POLE MAX.)

Scale: NONE
Drawn by: GPW — Date: 05-16-85
Checked by: [illegible] — Date: 5-17-85
Approved by Engineering: [illegible] — Date: 5-20-85
Approved by Production — Date:
Approved by Sales: [illegible] — Date: 6-14-85

Unless otherwise specified, dimensions are given in inches
Tolerances: Decimals ± ; Fractions ± ; Angles ±
Material — Finish — Weight

File Number
Drawing Number: B850530 R2

BRUNING 40-105 41503 3

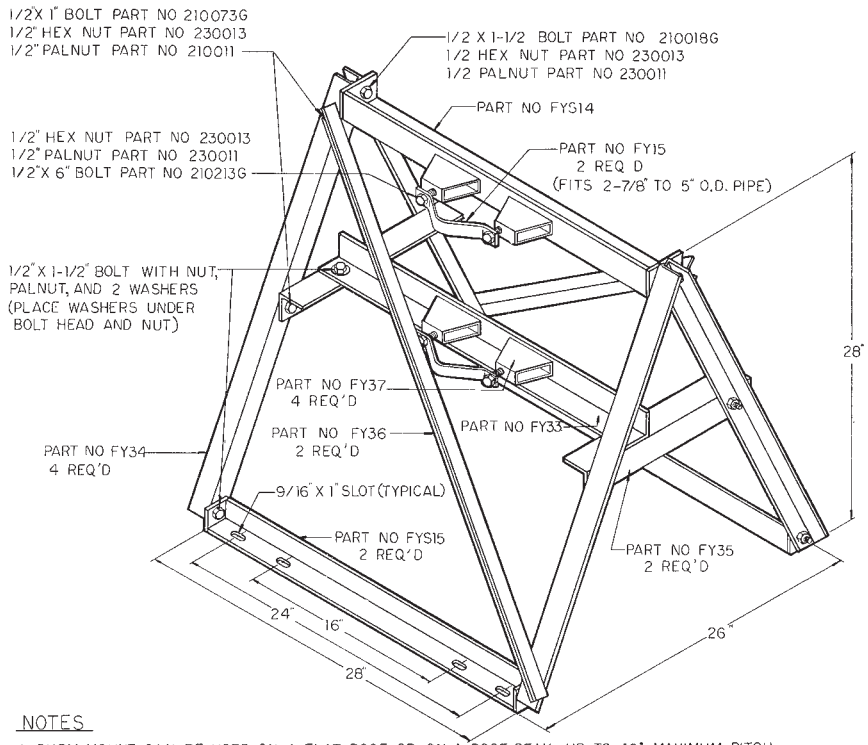

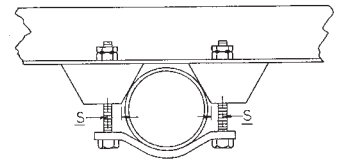

FOR 4-1/2" AND 5" O.D. PIPE USE THE SHORT SIDES OF WEDGES AGAINST THE PIPE.

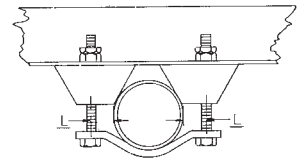

FOR 2-7/8", 3-1/2", AND 4" O.D. PIPE USE THE LONG SIDES OF WEDGES AGAINST THE PIPE.

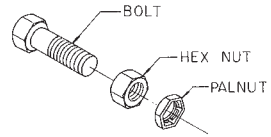

TYPICAL PALNUT INSTALLATION
INSTALL WITH OPEN SIDE AWAY FROM HEX NUT.

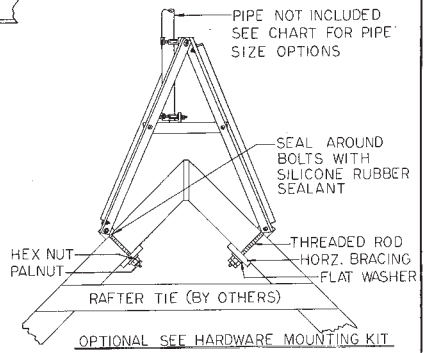

BILL OF MATERIAL

	QTY	PART NO	DESCRIPTION
ORDER ASS'Y NO. SHRM			SHRM CONTENTS
	1	FYS13	HARDWARE PACKAGE
	2	FYS15	BOTTOM MOUNT
	4	FY34	LEG
	4	FY37	WEDGE
	2	FY35	LEG BRACE
	1	FY33	BOTTOM PIPE SUPPORT
	1	FYS14	TOP PIPE SUPPORT
	2	FY36	BRACE
	2	FY15	SADDLE CLAMP
			HARDWARE PACKAGE CONTENTS
	8	210073G	BOLT 1/2"X 1"
	8	210018G	BOLT 1/2"X 1-1/2"
	4	210213G	BOLT 1/2"X 6"
	20	230011	NUT 1/2" PAL NUT
	20	230013	NUT 1/2" HEAVY HEX
	4	250011G	WASHER 9/16" SAE FLAT
*			OPTIONAL PIPE NOT INCLUDED
		P2530	PIPE 2-1/2" (2-7/8" O D) X 30" LONG
		P330	PIPE 3" (3-1/2" O D) X 30" LONG
		P3530	PIPE 3-1/2" (4" O D) X 30" LONG
		P430	PIPE 4" (4-1/2" O.D.) X 30" LONG

NOTES

1 SHRM MOUNT CAN BE USED ON A FLAT ROOF OR ON A ROOF PEAK, UP TO 45° MAXIMUM PITCH.
* 2 SHRM MOUNT CAN BE USED WITH 2-7/8" TO 5" O.D. PIPE OR TUBE, (30" MAX LENGTH) PER DISH BRACKET REQUIREMENTS. ORDER SEPARATELY – SEE BILL OF MATERIAL.
3 BOTTOM OF MOUNT PIVOTS TO MATCH ROOF PITCH.
4 ROOF MUST BE REINFORCED BEFORE INSTALLING MOUNT – SEE DRAWING C850019.
5 FASTEN MOUNT TO ROOF WITH A HARDWARE MOUNTING KIT, PART NO HMK14, DRAWING D850018 — ORDER SEPARATELY.
6 ALL HARDWARE AND PARTS ARE HOT DIP GALVANIZED AFTER FABRICATION.
7 THIS ANTENNA MOUNT IS DESIGNED IN ACCORDANCE WITH A.N.S.I. A58.1 "MIN. DESIGN LOADS FOR BUILDINGS AND OTHER STRUCTURES," EXPOSURE B, 70 M.P.H., FOR A MAX. 10' DIA. SOLID, GRID, OR MESH DISH WITH MOUNTING PIPE EXTENDED MAX. OF 1'-6" ABOVE TOP OF MOUNT (MAX. EFFECTIVE PROJ. AREA = 94 SQ. FT.).
8 IT IS THE PURCHASER'S RESPONSIBILITY TO VERIFY THAT HIS INSTALLATION IS ADEQUATE TO WITHSTAND ALL LOADS IMPOSED BY THIS MOUNT AND ANTENNA.
9 INSPECT MOUNT AND ANTENNA INSTALLATION EVERY 6 MONTHS, (OR AFTER EVERY STORM) FOR TIGHTNESS.
10 TO INSURE SAFETY, NO INSTALLATION SHOULD BE ATTEMPTED WITHOUT A LOCAL, PROFESSIONAL, STRUCTURAL ANALYSIS.
11 LOCAL ZONING AND/OR BUILDING CODES AND INSURANCE COMPANIES MAY REQUIRE ARCHITECT OR STRUCTURAL ENGINEER APPROVAL PRIOR TO INSTALLATION.
12 ALL ANTENNA INSTALLATION SHOULD BE GROUNDED, BY INSTALLER, TO MEET ALL APPLICABLE CODES.

No. ▲ Revision Description ▲ Date ▲ By

UNR-Rohn
Division of UNR, Inc.

Title: SHRM – "SAW HORSE ROOF MOUNT – TVRO"

Scale: —
Unless otherwise specified, dimensions are given in inches
References: Decimals ± Fractions ± Angles ±
Drawn by JSB Date 8-12-85
Checked by KA Date 8-13-85
Material Finish Weight
Approved by Engineering Date 8-15-85
Approved by Production Date
Approved by Sales Date 8-15-85
This drawing is the property of UNR-Rohn. It is not to be reproduced, copied or traced in whole or in part without our written permit.
File Number
Drawing Number D850059

TYPICAL ROOF INSTALLATION

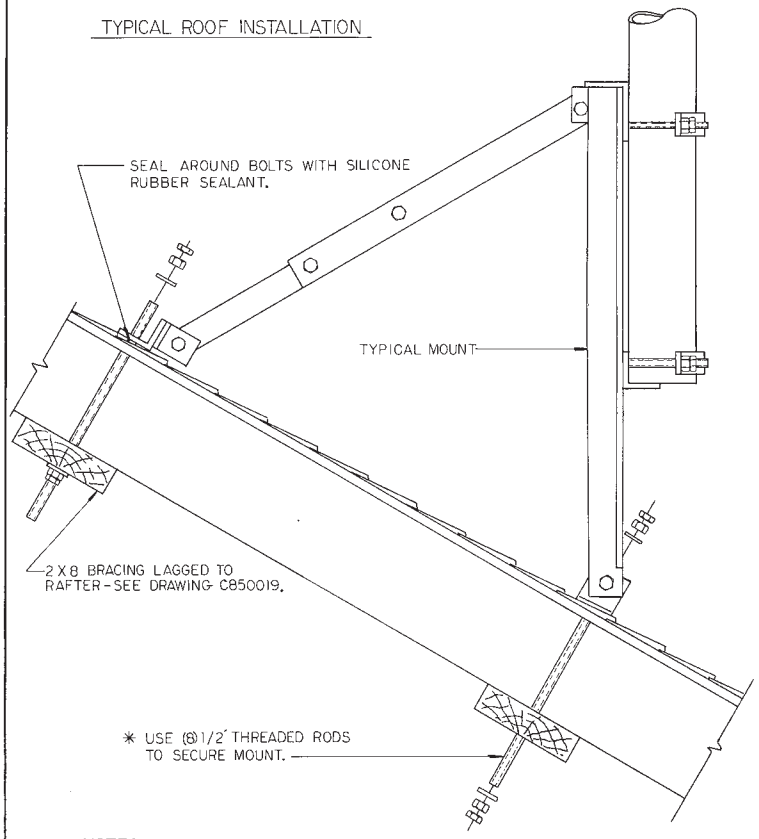

TYPICAL WALL INSTALLATION

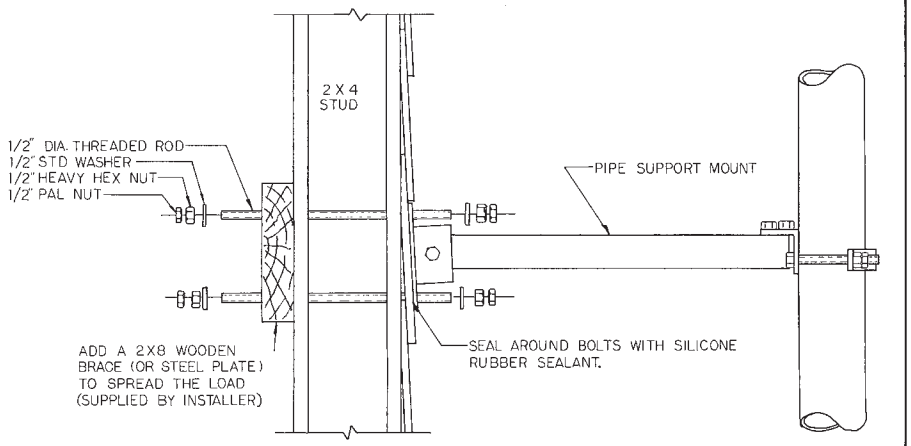

ASSY. NO.	THREADED ROD	
	PART NO.	DESCRIPTION
HMK14	210255G	1/2"-13 X 14" LONG FULL THREADED ROD
HMK18	210256G	1/2"-13 X 18" LONG FULL THREADED ROD
HMK24	210257G	1/2"-13 X 24" LONG FULL THREADED ROD

HARDWARE KIT CONTENTS

QTY	PART NO.	WRITTEN DESCRIPTION	PICTORIAL DESCRIPTION
8	SEE ASSY. NO. CHART	1/2"-13 FULL THREADED ROD	1/2" DIA — SEE CHART
1	380163	3 OZ TUBE OF SILICONE RUBBER SEALANT	SILICONE RUBBER SEALANT
16	230013	1/2"-13 HVY HEX NUT	
16	230011	1/2" PALNUT	PLACE THIS FACE AGAINST HEX NUT.
16	250035G	1/2" STD WASHER	

NOTES

1 TO INSURE SAFETY, NO INSTALLATION, ROOF OR WALL, SHOULD BE ATTEMPTED WITHOUT A LOCAL PROFESSIONAL STRUCTURAL ANALYSIS.
2 IT IS THE PURCHASER'S RESPONSIBILITY TO VERIFY THAT HIS INSTALLATION IS ADEQUATE TO WITHSTAND ALL LOADS IMPOSED BY HIS MOUNT AND ANTENNA.
3 LOCAL ZONING AND/OR BUILDING CODES AND INSURANCE COMPANIES MAY REQUIRE AN ARCHITECT OR STRUCTURAL ENGINEER APPROVAL PRIOR TO INSTALLATION.
4 INSPECT MOUNT AND ANTENNA INSTALLATION EVERY 6 MONTHS (OR AFTER EVERY STORM) FOR TIGHTNESS.
5 ALL ANTENNA INSTALLATION SHOULD BE GROUNDED, BY THE INSTALLER, TO MEET ALL APPLICABLE CODES.
6 ADDITIONAL SEALANT MAY BE PURCHASED AT A HARDWARE/BUILDING CENTER.
7 HARDWARE IS HOT DIP GALVANIZED AFTER FABRICATION.
✱8 THICKER WALLS (CONCRETE, CEMENT BLOCKS, ETC.) MAY REQUIRE LONGER RODS - SEE "ROHN" CATALOG.

No.	Revision Description	Date	By
R1	ADDED ASSY P/N CHART	4-24-85	GLJ

UNR-Rohn
Division of UNR, Inc.

Title: HARDWARE MOUNTING KIT

Scale: —
Unless otherwise specified dimensions are given in inches
Tolerances: Decimals ±; Fractions ±; Angles ±
Material: Finish: Weight:
Drawn by: JSB Date: 3-5-85
Checked by: KA Date: 3-5-85
Approved by Engineering: Date: 3-13-85
Approved by Production: Date:
Approved by Sales: Date:
This drawing is the property of UNR-Rohn. It is not to be reproduced, copied or loaned in whole or in part without our written consent.
File Number:
Drawing Number: D850018 R1

ROHN Z8005A - CHIMNEY MOUNT

Z-TYPE FOR TUBING UP TO 1-1/2 DIAMETER

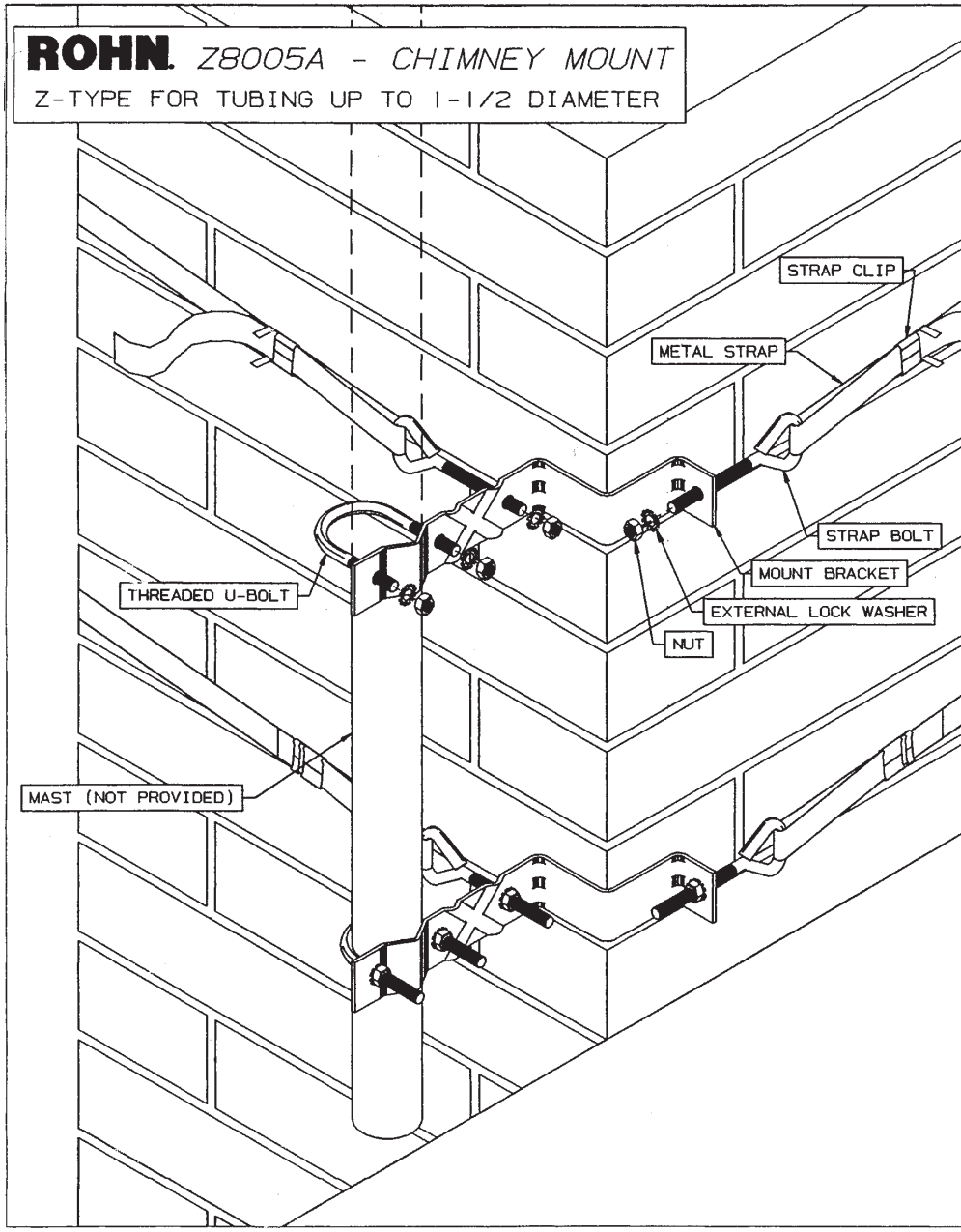

ASSEMBLY INSTRUCTIONS:

1. START STRAP BOLTS INTO BRACKET HOLES, SCREWING APPROXIMATELY 1/4" THRU EXTERNAL LOCK WASHERS INTO NUTS.
2. PLACE ONE BRACKET AGAINST CHIMNEY CORNER AS SHOWN IN DIAGRAM.
3. WRAP METAL STRAP AROUND CHIMNEY AND SLIP THRU THE STRAP CLIPS. WORK STRAP THRU THE HOOK END OF THE BOLT AND SLIP BACK THRU THE CLIP AS SHOWN. USE PLIERS TO CRIMP THE CLIP TO SECURE THE STRAP.
4. TIGHTEN THE NUTS ON THE STRAP BOLTS TO REMOVE ANY SLACK IN THE METAL STRAP. CUT-OFF ANY EXCESS METAL STRIP.
5. REPEAT ABOVE STEPS FOR THE SECOND BRACKET ASSEMBLY. THE BRACKETS SHOULD BE A MINIMUM OF 18" APART, VERTICALLY.
6. ATTACH THE U-BOLTS INTO POSITION AS SHOWN WITH EXTERNAL LOCK WASHERS AND NUTS.
7. SLIDE THE MAST INTO CHIMNEY MOUNT BRACKET AND TIGHTEN THE NUTS OF THE U-BOLTS TO SECURE THE MOUNT.
8. IT IS THE INSTALLER'S RESPONSIBILITY TO VERIFY THAT THE CHIMNEY, MOUNTING SURFACE, AND THE ENTIRE INSTALLATION IS ADEQUATE TO WITHSTAND ALL LOADS IMPOSED BY THIS MOUNT, ANTENNA, OR ANY INSTALLATION ACCESSORIES SUCH AS A LADDER OR THE WEIGHT OF A MAN.
9. LOCAL ZONING AND/OR BUILDING CODES AND INSURANCE COMPANIES MAY REQUIRE ARCHITECT OR STRUCTURAL ENGINEERING APPROVAL PRIOR TO INSTALLATION.
10. ALL ANTENNA INSTALLATIONS SHOULD BE GROUNDED BY THE INSTALLER TO MEET ALL APPLICABLE CODES.
11. TO ENSURE SAFETY, NO INSTALLATION, ROOF OR WALL, SHOULD BE ATTEMPTED WITHOUT A LOCAL PROFESSIONAL STRUCTURAL ANALYSIS.
12. INSPECT MOUNT AND ANTENNA INSTALLATION EVERY 6 MONTHS (OR AFTER EVERY STORM) FOR TIGHTNESS.

ROHN.

Title
Z8005A - CHIMNEY MOUNT ASSEMBLY

Scale NONE	Unless otherwise specified, dimensions are given in inches. Tolerances are as noted.
Drawn by TDS — Date 03/26/96	Material — Finish — Weight
Checked by MD — Date 04/19/96	This drawing is the property of ROHN. It is not to be reproduced, copied or traced in part without our written consent.
Approved by Engineering — Date	File Number EF4167TS
Approved by Production — Date 7/2/96	Drawing Number C960060R1
Approved by Sales — Date	
Drawing Type : ASSY	

ONE LEGGED MOUNT ASSEMBLY

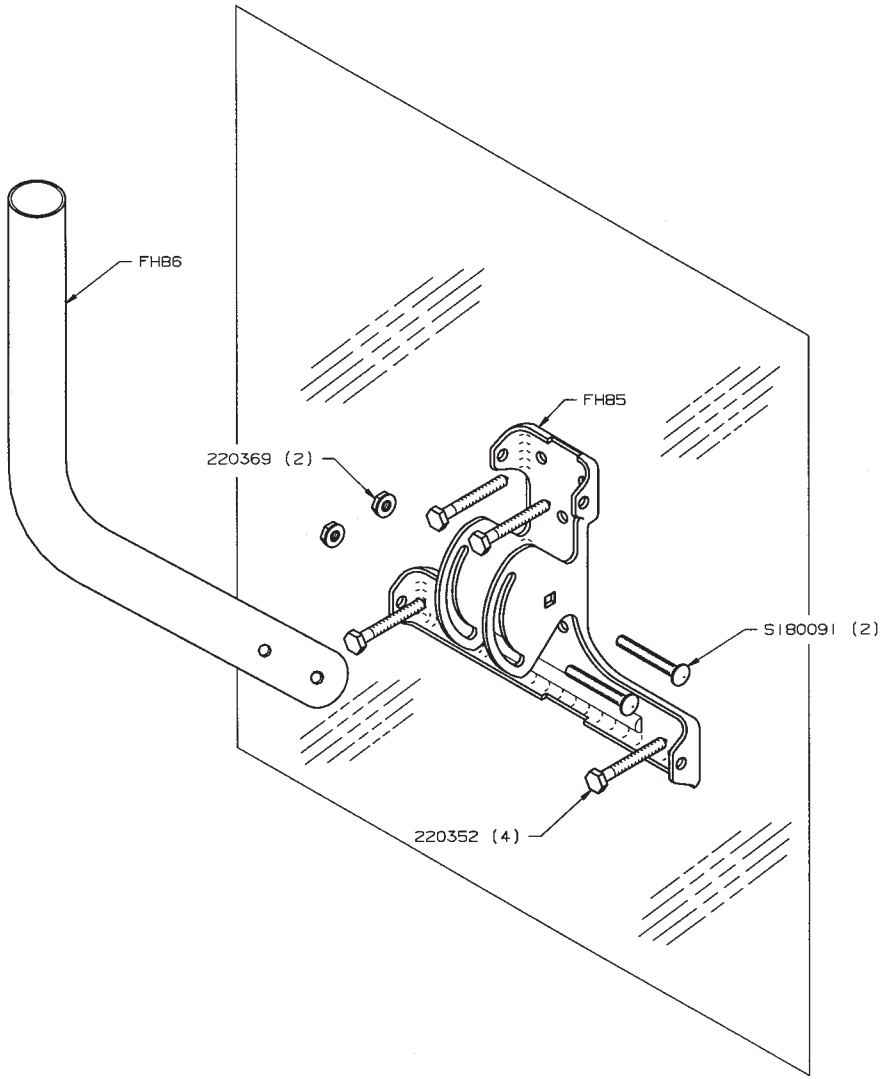

NOTES:

1.) ONE LEGGED MOUNT CAN BE INSTALLED ON A FLAT OR PITCHED ROOF, WOOD OR MASONARY WALL OR EAVE (GABLE END). WITH THE OPTIONAL ILGCM CHIMNEY MOUNT KIT, THE ONE LEGGED MOUNT CAN BE INSTALLED ON A MASONARY CHIMNEY.
2.) ALL ANTENNA INSTALLATIONS SHOULD BE GROUNDED BY THE INSTALLER TO MEET ALL APPLICABLE CODES.
3.) TO INSURE SAFETY, NO INSTALLATION, ROOF OR WALL, SHOULD BE ATTEMPTED WITHOUT A LOCAL PROFESSIONAL STUCTURAL ANALYSIS.
4.) INSPECT MOUNT AND ANTENNA INSTALLATION EVERY 6 MONTHS (OR AFTER EVERY STORM) FOR TIGHTNESS.
5.) IT IS THE INSTALLER'S RESPONSIBILITY TO VERIFY THAT HIS INSTALLATION IS ADEQUATE TO WITHSTAND ALL LOADS IMPOSED BY THIS MOUNT AND ANTENNA.
6.) LOCAL ZONING AND/OR BUILDING CODES AND INSURANCE COMPANIES MAY REQUIRE ARCHITECT OR STRUCTURAL ENGINEER APPROVAL PRIOR TO INSTALLATION.
7.) MOUNTING TUBE IS 1-1/4" O.D.
8.) ANTENNA NOT TO EXCEED 2 SQUARE FEET OF EFFECTIVE PROJECTED AREA.

ILG CONTAINS THE FOLLOWING:

FH85	FORMED BRACKET	(1)
FH86	1-1/4" O.D. TUBE	(1)
S180091	1/4" X 1-3/4" CARRIAGE BOLT	(2)
220369	1/4" FLANGE NUT	(2)
220352	1/4" X 2" LAG SCREW	(4)

ILGCM CONTAINS THE FOLLOWING:

FH88	CHIMNEY MOUNTING STRAP	(2)
FH87	HARDWARE BAG FOR CHIMNEY MOUNT	(1)

ROHN.

Title
ONE LEGGGED MOUNT ASSEMBLY

Scale: NONE
Drawn by: TLO — Date: 6-6-96
Checked by — Date
Approved by Engineering — Date
Approved by Production — Date: 6/19/96
Approved by Sales — Date
Drawing Type : ELEV

Unless otherwise specified, dimensions are given in inches. Tolerances are as noted.
Material — Finish — Weight

File Number: EF4196TO
Drawing Number: C960119

SNAKE MOUNT™ ASSEMBLY SM125

NOTES:
1.) SNAKE MOUNT CAN BE USED ON A FLAT, SLOPED, OR PEAKED ROOF.
2.) SNAKE MOUNT CAN BE USED ON A WOOD OR MASONARY WALL.
3.) TWO KNEE BRACES ARE INCLUDED. APPLICATION VARIES WITH PITCH OF ROOF.
4.) ALL ANTENNA INSTALLATIONS SHOULD BE GROUNDED BY THE INSTALLER TO MEET ALL APPLICABLE CODES.
5.) TO INSURE SAFETY, NO INSTALLATION, ROOF OR WALL, SHOULD BE ATTEMPTED WITHOUT A LOCAL PROFESSIONAL STRUCTURAL ANALYSIS.
6.) INSPECT MOUNT AND ANTENNA INSTALLATION EVERY 6 MONTHS (OR AFTER EVERY STORM) FOR TIGHTNESS.
7.) IT IS THE INSTALLER'S RESPONSIBILITY TO VERIFY THAT HIS INSTALLATION IS ADEQUATE TO WITHSTAND ALL LOADS IMPOSED BY THIS MOUNT AND ANTENNA.
8.) LOCAL ZONING AND/ OR BUILDING CODES AND INSURANCE COMPANIES MAY REQUIRE ARCHITECT OR STRUCTURAL ENGINEER APPROVAL PRIOR TO INSTALLATION.
9.) SNAKE MOUNT IS A REGISTERED TRADE MARK.
10.) PATENT APPLIED FOR.

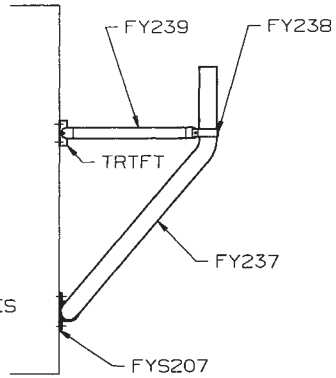

END VIEW

WALL MOUNT

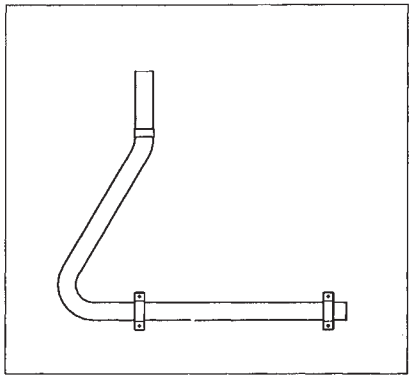

FRONT VIEW

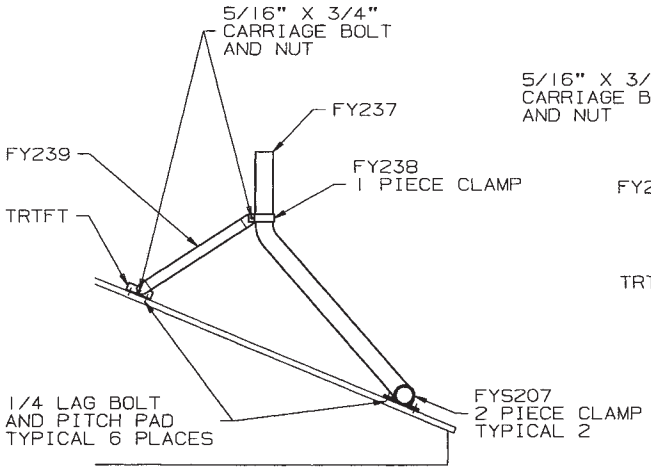

END VIEW

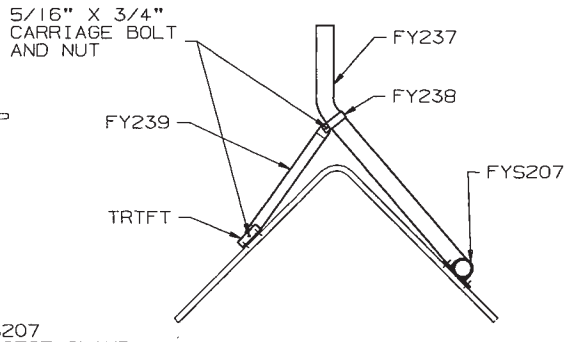

END VIEW

ROHN.

Title
SNAKE MOUNT ASSEMBLY
SM125

Scale NONE		Unless otherwise specified, dimensions are given in inches. Tolerances are as noted.
Drawn by TLO	Date 6/17/96	Material / Finish / Weight
Checked by	Date	
Approved by Engineering	Date	This drawing is the property of ROHN. It is not to be reproduced, copied or traced in part without our written consent.
Approved by Production TDL	Date 6/19/96	File Number EF4108TO
Approved by Sales	Date	Drawing Number C960129
Drawing Type : ASSEMBLY		

SNAKE MOUNT™ ASSEMBLY SM225

NOTES:
1.) SNAKE MOUNT CAN BE USED ON A FLAT, SLOPED, OR PEAKED ROOF.
2.) SNAKE MOUNT CAN BE USED ON A WOOD OR MASONARY WALL.
3.) TWO KNEE BRACES ARE INCLUDED. APPLICATION VARIES WITH PITCH OF ROOF.
4.) ALL ANTENNA INSTALLATIONS SHOULD BE GROUNDED BY THE INSTALLER TO MEET ALL APPLICABLE CODES.
5.) TO INSURE SAFETY, NO INSTALLATION, ROOF OR WALL, SHOULD BE ATTEMPTED WITHOUT A LOCAL PROFESSIONAL STRUCTURAL ANALYSIS.
6.) INSPECT MOUNT AND ANTENNA INSTALLATION EVERY 6 MONTHS (OR AFTER EVERY STORM) FOR TIGHTNESS.
7.) IT IS THE INSTALLER'S RESPONSIBILITY TO VERIFY THAT HIS INSTALLATION IS ADEQUATE TO WITHSTAND ALL LOADS IMPOSED BY THIS MOUNT AND ANTENNA.
8.) LOCAL ZONING AND/ OR BUILDING CODES AND INSURANCE COMPANIES MAY REQUIRE ARCHITECT OR STRUCTURAL ENGINEER APPROVAL PRIOR TO INSTALLATION.
9.) SNAKE MOUNT IS A REGISTERED TRADE MARK.
10.) PATENT APPLIED FOR.

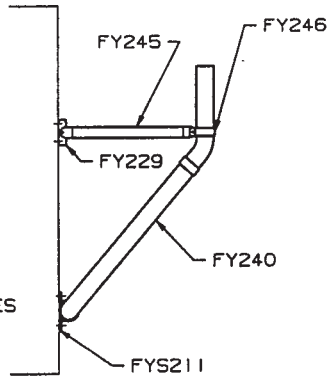

END VIEW

WALL MOUNT

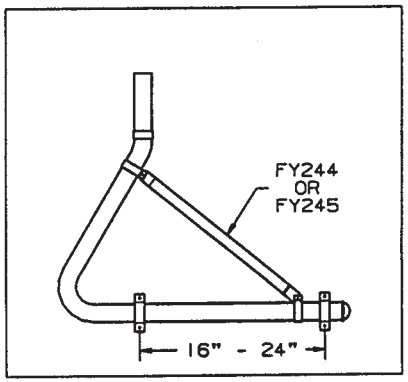

FRONT VIEW

BRACKETS AND CLAMPS ADJUST TO FIT MOST ANY RAFTER OR WALL STUD SPACING REQUIREMENTS.

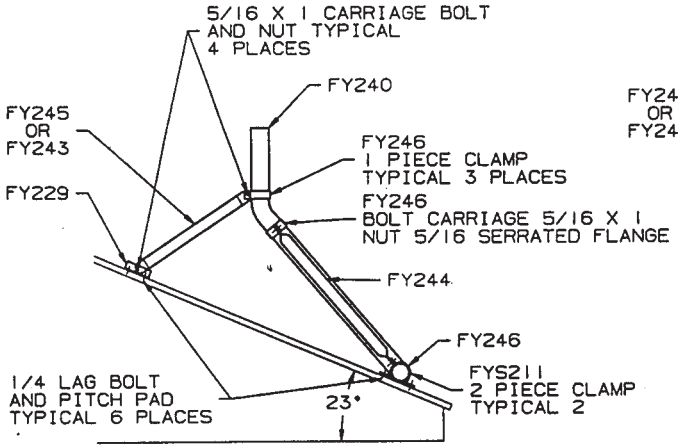

END VIEW

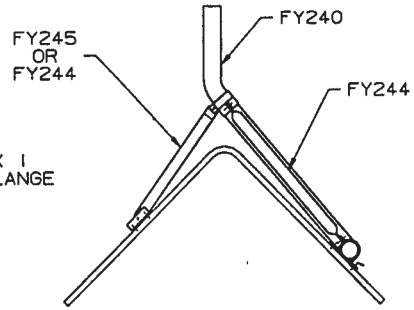

END VIEW

ROHN.

Title
SNAKE MOUNT ASSEMBLY
SM225

Scale NONE		Unless otherwise specified, dimensions are given in inches. Tolerances are as noted.
Drawn by TDS	Date 10/27/96	Material / Finish / Weight
Checked by MD	Date 01/03/97	This drawing is the property of ROHN. It is not to be reproduced, copied or traced in part without our written consent.
Approved by Engineering	Date	File Number EF4236T0
Approved by Production BK / AH	Date 01/03/97	Drawing Number C960313
Approved by Sales	Date	
Drawing Type : ASSEMBLY		

HEAVY DUTY ALL STEEL TRI-MOUNTS

All The Features Needed For Any Type Of TV Antenna Installation

- Spiral double headed nails provided for secure attachment and easy disconnect
- Pitch pads provided to seal base
- Pre-galvanized to resist corrosion
- Tri-Mounts are notched at the top for easy installation and to prevent extension mast from twisting
- Outriggers are easily adapted to any roof pitch

SPECIFICATIONS

Both mounts have Standard Packages of 5 per banded bundle and Master Packages of 120.

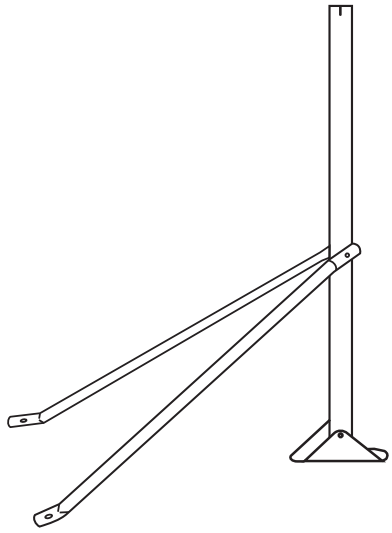

TRM 36 has a weight of 15 lbs. per package.

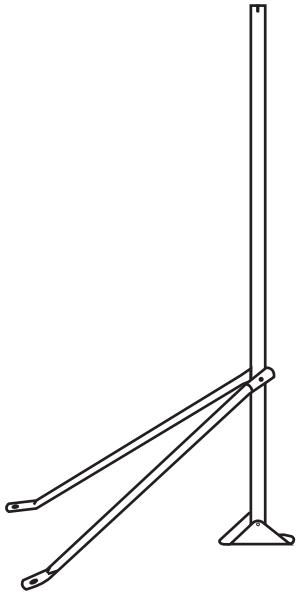

TRM 60 has a weight of 20 lbs. per package.

TRIPOD ROOF TOWERS

TRT36-Snap-out design

TRT60-4′ base spread to accommodate 24″ or 16″ rafter spacing

TRT122-Bolt on braces, ladder face on one side, bolt on foot for hinge-type installation

SPECIFICATIONS

Part Number	Wt.	Ht.	Packaged
TRT30	6#	2′6″	Bulk
TRT36	7#	3′	Bulk
TRT60	10#	5′	Bulk
TRT122	29#	10′	Cardboard Box
TRT Bag (optional)	1/2#	Bag contains: 6 lag screws & foot sealers	

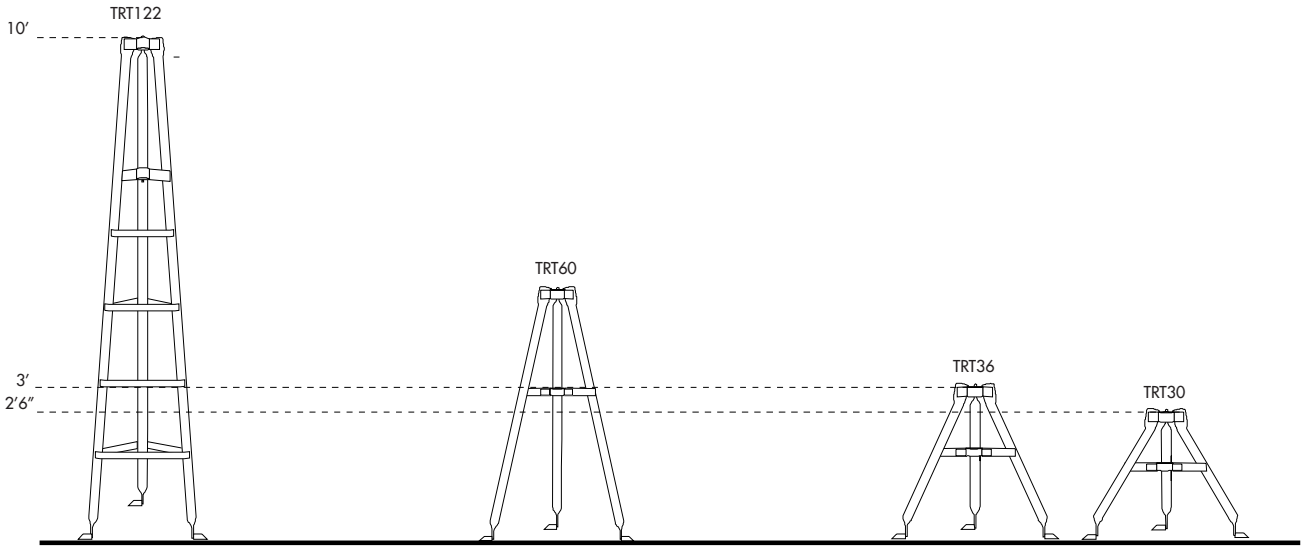

Do not install towers or masts near power lines. All towers or masts should be installed out of falling distance of power lines since every electrical and telephone wire should be considered dangerous.

ROHN recommends anti-climb sections on all towers to prevent unauthorized persons from climbing towers.

All towers and masts should be installed and dismantled by experienced and trained personnel.

All types of antenna installations should be thoroughly inspected by qualified persons and remarked with hazard and warning labels at least twice a year to insure safety and proper performance.

All antenna installations must be grounded per local or national codes.

The mixing of so-called interchangeable copies of Rohn towers with Rohn towers is dangerous and voids all engineering or warranty data supplied by Rohn. Materials used by the so-called copies are not the same quality and have not been tested or engineered by Rohn to conform to the same quality standards. Mixing of non-Rohn items may endanger the lives of your customers and cause serious tower failures and financial misfortune for all concerned.

ROHN® STEEL TUBING

Part Number	Description	Finish	End Type	Packaging
160505PHS	1 1/4″ x 5′ - 16 gauge	Pre-Galvanized	Swaged	Bundled
161005GHS	1 1/4″ x 10′ - 16 gauge	Hot Dip Galvanized	Swaged	Bundled
161005PHS	1 1/4″ x 10′ - 16 gauge	Pre-Galvanized	Swaged	Bundled
161005PHSB	1 1/4″ x 10′ - 16 gauge	Pre-Galvanized	Swaged	Boxed
161006PLX	1 1/2″ x 10′ - 16 gauge	Pre-Galvanized	Expanded	Bundled
M200	2″O.D. x 10′ - 16 gauge	Pre-Galvanized	Plain End	Bundled
M200H	2″O.D. x 10′ - 1/8″ wall	Hot Dip Galvanized	Plain End	Bundled
M4	1 1/4″ x 4′ - 16 gauge	Pre-Galvanized	Plain End	Bundled
M8	1 1/4″ x 8′ - 16 gauge	Pre-Galvanized	Plain End	Bundled
180505PHS	1 1/4″ x 5′ - 18 gauge	Pre-Galvanized	Swaged	Bundled
180505PHSB	1 1/4″ x 5′ - 18 gauge	Pre-Galvanized	Swaged	Boxed
181005PHS	1 1/4″ x 10′ - 18 gauge	Pre-Galvanized	Swaged	Bundled
181005PHSB	1 1/4″ x 10′ - 18 gauge	Pre-Galvanized	Swaged	Boxed
200505EHS	1 1/4″ x 5′ - 20 gauge	Gold Enameled	Swaged	Bundled
200505PHS	1 1/4″ x 5′ - 20 gauge	Pre-Galvanized	Swaged	Bundled
201005PHS	1 1/4″ x 10′ - 20 gauge	Pre-Galvanized	Swaged	Bundled
202505PHS	1 1/4″ x 2 1/2′ - 20 gauge	Pre-Galvanized	Swaged	Bundled

5′ and 10′ tubing are banded 10 pcs. per bundle. 2 1/2′ tubing is banded 20 pcs. per bundle or can be bulk packed per customer specifications.
5′ and 10′ boxed tubing are 10 pcs. per box.

For Your Protection
Do not install or dismantle steel tubing near power lines. All steel tubing should be installed or dismantled out of falling distance of power lines since every electrical and telephone wire should be considered dangerous.

All antenna-type installations should be installed (or dismantled) by experienced and trained personnel and guyed or attached every 10′. The maximum height for average TV receiving antennas is 30′ above ground (or 10′ above roof). Large ham, CB, or TV antennas are not recommended for use with 1 1/4″-10′ tubing sections.

All antenna-type installations should be thoroughly inspected by qualified personnel and marked with hazard and warning labels to insure safety and proper performance.

All antenna-type installations must be grounded per local or national codes.

For safety and installation information, see ROHN publication Form No. 93-2754C.

BRUNING 40-105 41503-1

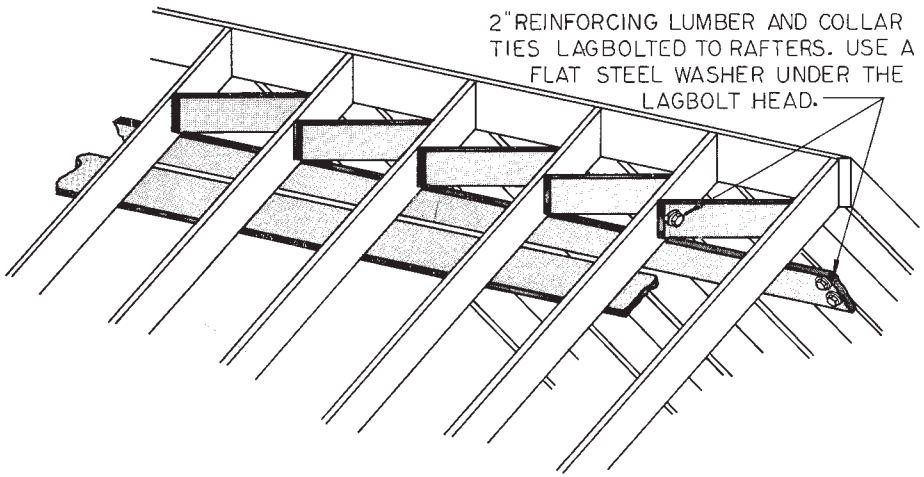

ROOF REINFORCING LUMBER (SHOWN SHADED) MUST BE PLACED DIRECTLY UNDER CENTER OF MOUNTING FEET.

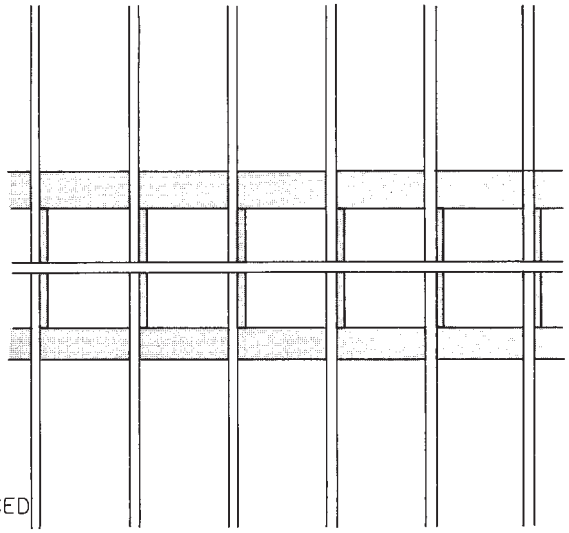

TOP VIEW

NOTES

1. TO INSURE SAFETY, NO INSTALLATION, ROOF OR WALL, SHOULD BE ATTEMPTED WITHOUT A LOCAL PROFESSIONAL STRUCTURAL ANALYSIS.
2. IT IS THE PURCHASER'S RESPONSIBILITY TO VERIFY THAT HIS INSTALLATION IS ADEQUATE TO WITHSTAND ALL LOADS IMPOSED BY HIS MOUNT AND ANTENNA.
3. LOCAL ZONING AND/OR BUILDING CODES AND INSURANCE COMPANIES MAY REQUIRE AN ARCHITECT OR STRUCTURAL ENGINEER APPROVAL PRIOR TO INSTALLATION.
4. INSPECT MOUNT AND ANTENNA INSTALLATION EVERY 6 MONTHS (OR AFTER EVERY STORM) FOR TIGHTNESS.
5. ALL ANTENNA INSTALLATION SHOULD BE GROUNDED, BY THE INSTALLER, TO MEET ALL APPLICABLE CODES.

No	Revision Description	Date	By

UNR-Rohn
Division of UNR, Inc

Title: TYPICAL ROOF REINFORCING FOR TVRO MOUNTS

Scale

Unless otherwise specified, dimensions are given in inches
Tolerances: Decimals ±; Fractions ±; Angles ±
Material; Finish; Weight

Drawn by: JSB — Date: 3-5-85
Checked by: KA — Date: 3-5-85
Approved by Engineering: WDLL — Date: 3-13-85
Approved by Production — Date
Approved by Sales — Date

File Number

Drawing Number: C850019

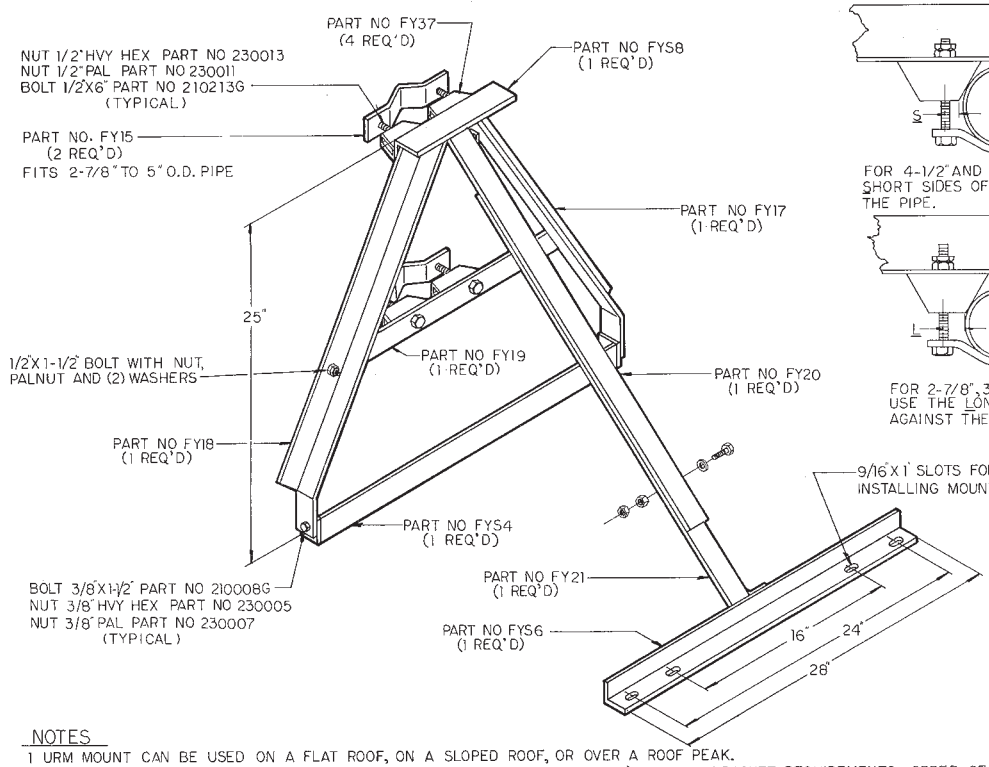

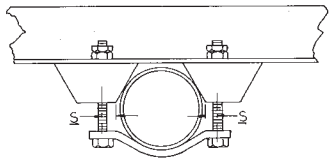

FOR 4-1/2" AND 5" O.D. PIPE USE THE SHORT SIDES OF WEDGES AGAINST THE PIPE.

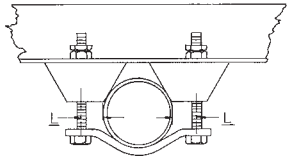

FOR 2-7/8", 3-1/2", AND 4" O.D. PIPE USE THE LONG SIDES OF WEDGES AGAINST THE PIPE.

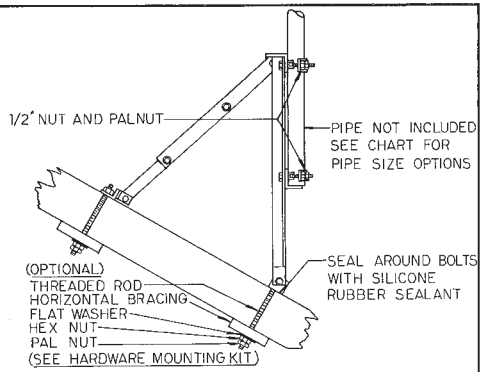

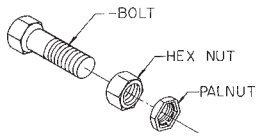

TYPICAL PALNUT INSTALLATION

INSTALL WITH OPEN SIDE AWAY FROM HEX NUT

BILL OF MATERIAL

ORDER ASSEMBLY NO. URM	QTY	PART NO	DESCRIPTION
			URM CONTENTS
	4	FY37	WEDGE
	1	FYS7	HARDWARE PACKAGE
	1	FYS4	BOTTOM MOUNT FRONT
	1	FYS6	BOTTOM MOUNT REAR
	1	FYS8	TOP PIPE SUPPORT
	1	FY17	LEG LEFT
	1	FY18	LEG RIGHT
	1	FY19	BOTTOM PIPE SUPPORT
	1	FY20	REAR LEG TOP
	1	FY21	REAR LEG BOTTOM
	2	FY15	SADDLE CLAMP
			HARDWARE PACKAGE CONTENTS
	2	210018G	BOLT 1/2"X1-1/2"
	8	210008G	BOLT 3/8"X1-1/2"
	4	210213G	BOLT 1/2"X6"
	8	230005	NUT 3/8" HEAVY HEX
	6	230013	NUT 1/2" HEAVY HEX
	8	230007	NUT 3/8" PAL
	6	230011	NUT 1/2" PAL
	2	250059G	WASHER 3/8" FLAT STD
	4	250035G	WASHER 1/2" FLAT
*			OPTIONAL PIPE NOT INCLUDED
		P2530	PIPE 2-1/2" (2-7/8" O.D.) X 30' LONG
		P330	PIPE 3" (3-1/2" O.D.) X 30' LONG
		P3530	PIPE 3-1/2" (4" O.D.) X 30' LONG
		P430	PIPE 4" (4-1/2" O.D.) X 30' LONG

NOTES

1 URM MOUNT CAN BE USED ON A FLAT ROOF, ON A SLOPED ROOF, OR OVER A ROOF PEAK.
* 2 URM MOUNT CAN BE USED WITH 2-7/8" TO 5" O.D. PIPE OR TUBE (30" MAX LENGTH) PER DISH BRACKET REQUIREMENTS. ORDER SEPARATELY—SEE BILL OF MATERIAL.
3 BOTTOM OF MOUNT PIVOTS TO MATCH ROOF PITCH.
4 ROOF MUST BE REINFORCED BEFORE INSTALLING MOUNT. SEE TYPICAL DRAWING C850019.
5 FASTEN MOUNT TO ROOF WITH HARDWARE MOUNTING KIT, PART NO HMK14, DRAWING NO. D850018 – ORDER SEPARATELY.
6 ALL HARDWARE AND PARTS ARE HOT DIP GALVANIZED AFTER FABRICATION.
7 IT IS THE PURCHASER'S RESPONSIBILITY TO VERIFY THAT HIS INSTALLATION IS ADEQUATE TO WITHSTAND ALL LOADS IMPOSED BY THIS MOUNT AND ANTENNA.
8 INSPECT MOUNT AND ANTENNA INSTALLATION EVERY 6 MONTHS (OR AFTER EVERY STORM) FOR TIGHTNESS.
9 TO INSURE SAFETY, NO INSTALLATION, ROOF OR WALL, SHOULD BE ATTEMPTED WITHOUT A LOCAL PROFESSIONAL STRUCTURAL ANALYSIS.
10 LOCAL ZONING AND/OR BUILDING CODES AND INSURANCE COMPANIES MAY REQUIRE ARCHITECT OR STRUCTURAL ENGINEER APPROVAL PRIOR TO INSTALLATION.
11 ALL ANTENNA INSTALLATION SHOULD BE GROUNDED, BY THE INSTALLER, TO MEET ALL APPLICABLE CODES.
12 REAR LEG ADJUSTS FOR EXTRA LENGTH.
13 PLACE WASHERS UNDER BOLT HEAD AND NUT.
14 THIS ANTENNA MOUNT IS DESIGNED IN ACCORDANCE WITH A.N.S.I. A58.1 "MIN. DESIGN LOADS FOR BUILDINGS AND OTHER STRUCTURES", EXPOSURE B, 70 M.P.H. FOR A MAX. 10' DIA. SOLID, GRID, OR MESH DISH WITH MOUNTING PIPE EXTENDED A MAX. OF 1'-6" ABOVE TOP OF MOUNT (MAX. EFFECTIVE PROJ. AREA = 94 SQ. FT.).

No.	Revision Description	Date	By
R1	ADDED WEDGES	8-13-85	JB

UNR-Rohn
Division of UNR, Inc.

Title: URM-"UNIVERSAL ROOF MOUNT-TVRO"

Scale: | Unless otherwise specified, dimensions are given in inches. Tolerances: Decimals ±, Fractions ±, Angles ±. Material: Finish: Weight:

Drawn by: JSB 3-4-85
Checked by: KA 3-5-85
Approved by Engineering: KAC 3-13-85
Approved by Production: Date
Approved by Sales: DAH 3-13-85

This drawing is the property of UNR-Rohn, It is not to be reproduced or traced in whole or in part without our written consent.
File Number:
Drawing Number: D850016R1

DOUBLE WALL MOUNT ASSEMBLY

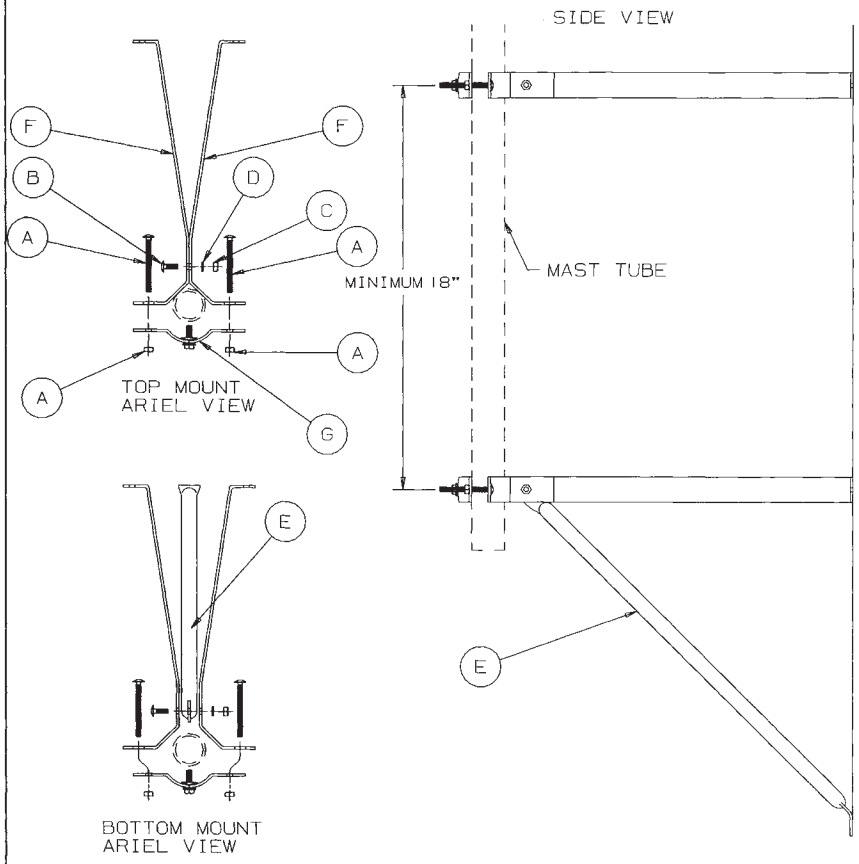

BILL OF MATERIAL

ITEM	QTY	PART NO	DESCRIPTION	
A	1	220031PKN4	BOLT 1/4 x 2-3/4 CARR W/NUT (PKG OF 4)	ZP
B	2	220346	BOLT 1/4 X 3/4 CARR	ZP
C	2	240005	NUT 1/4 HEX	ZP
D	2	250120	WASHER 1/4 SPLIT LOCK	ZP
E	1	SEE TABLE A	TUBE SPECIFICATION WILL VARY	
F	4	SEE TABLE B	STRAP SPECIFICATION WILL VARY	
G	2	FHS18	WALL MOUNT BRACKET ASSEMBLY	

TABLE A

PART NO	DESCRIPTION	
FH59	TUBE 3/4 X 18GA X 10-7/8 FOR 8" MOUNT	PG
FH60	TUBE 3/4 X 18GA X 16-1/2 FOR 12" MOUNT	PG
FH61	TUBE 3/4 X 18GA X 25 FOR 18" MOUNT	PG
FH62	TUBE 3/4 X 18GA X 32 FOR 24" MOUNT	PG

TABLE B

PART NO	DESCRIPTION	
FH75	8" WALL MOUNT STRAP	PG
FH76	12" WALL MOUNT STRAP	PG
FH77	18" WALL MOUNT STRAP	PG
FH78	24" WALL MOUNT STRAP	PG

ROHN®

Title
DOUBLE WALL MOUNT ASSEMBLY

Scale
NONE

Unless otherwise specified, dimensions are given in inches. Tolerances are as noted.

Drawn by TDS Date 1/16/96
Checked by MD Date 1/18/96
Approved by Engineering Date
Approved by Production BH / PDC Date 1/19/96
Approved by Sales Date

Material Finish Weight

File Number EF4112TS
Drawing Number C960014
Drawing Type : ELE

SINGLE WALL MOUNT ASSEMBLY

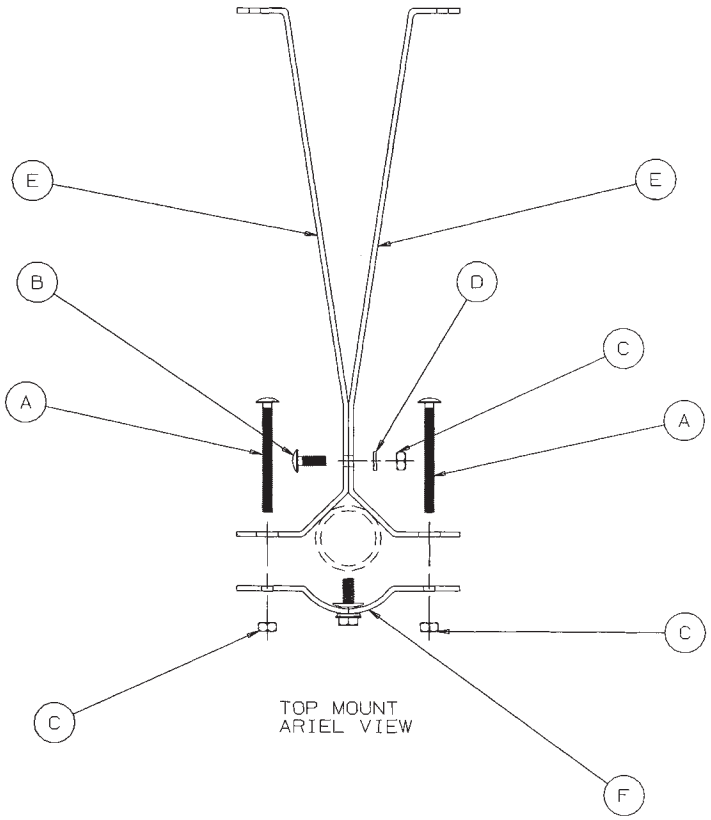

BILL OF MATERIAL

ITEM	QTY	PART NO	DESCRIPTION	
A	2	220031	BOLT 1/4 x 2-3/4 CARR	ZP
B	1	220346	BOLT 1/4 X 3/4 CARR	ZP
C	3	240005	NUT 1/4 HEX	ZP
D	1	250120	WASHER 1/4 SPLIT LOCK	ZP
E	2	SEE TABLE A	STRAP SPECIFICATION WILL VARY	
F	1	FHS18	BRACKET ASSEMBLY	

TABLE A

PART NO	DESCRIPTION	
FH74	6" WALL MOUNT STRAP	PG
FH75	8" WALL MOUNT STRAP	PG
FH76	12" WALL MOUNT STRAP	PG
FH77	18" WALL MOUNT STRAP	PG
FH78	24" WALL MOUNT STRAP	PG
FH79	30" WALL MOUNT STRAP	PG

ROHN®

Title
SINGLE WALL MOUNT ASSEMBLY

Scale
NONE

Unless otherwise specified, dimensions are given in inches. Tolerances are as noted.

Drawn by	Date
TDS	1/15/96
Checked by	Date
MD	1/18/96
Approved by Engineering	Date
Approved by Production	Date
BH / PDC	1/19/96
Approved by Sales	Date

Material | Finish | Weight

File Number EF4112TS

Drawing Number C960013

Drawing Type : ELE

HEAVY-DUTY, GALVANIZED WALL MOUNTS

WM4	4" clearance, upper and lower bracket supplied, heavy duty (includes lag screws)
VWM4	4" clearance, upper and lower bracket supplied, economy model (includes lag screws)
WM6S*	6" clearance, upper bracket only
WM8S*	8" clearance, upper bracket only
WM8D*	8″ clearance, upper and lower bracket supplied
WM12S*	12" clearance, upper bracket only
WM12D*	12" clearance, upper and lower bracket supplied
WM18S*	18" clearance, upper bracket only
WM18D*	18" clearance, upper and lower bracket supplied
WM24S*	24" clearance, upper bracket only
WM24D*	24" clearance, upper and lower bracket supplied
WM30S*	30" clearance, upper bracket only

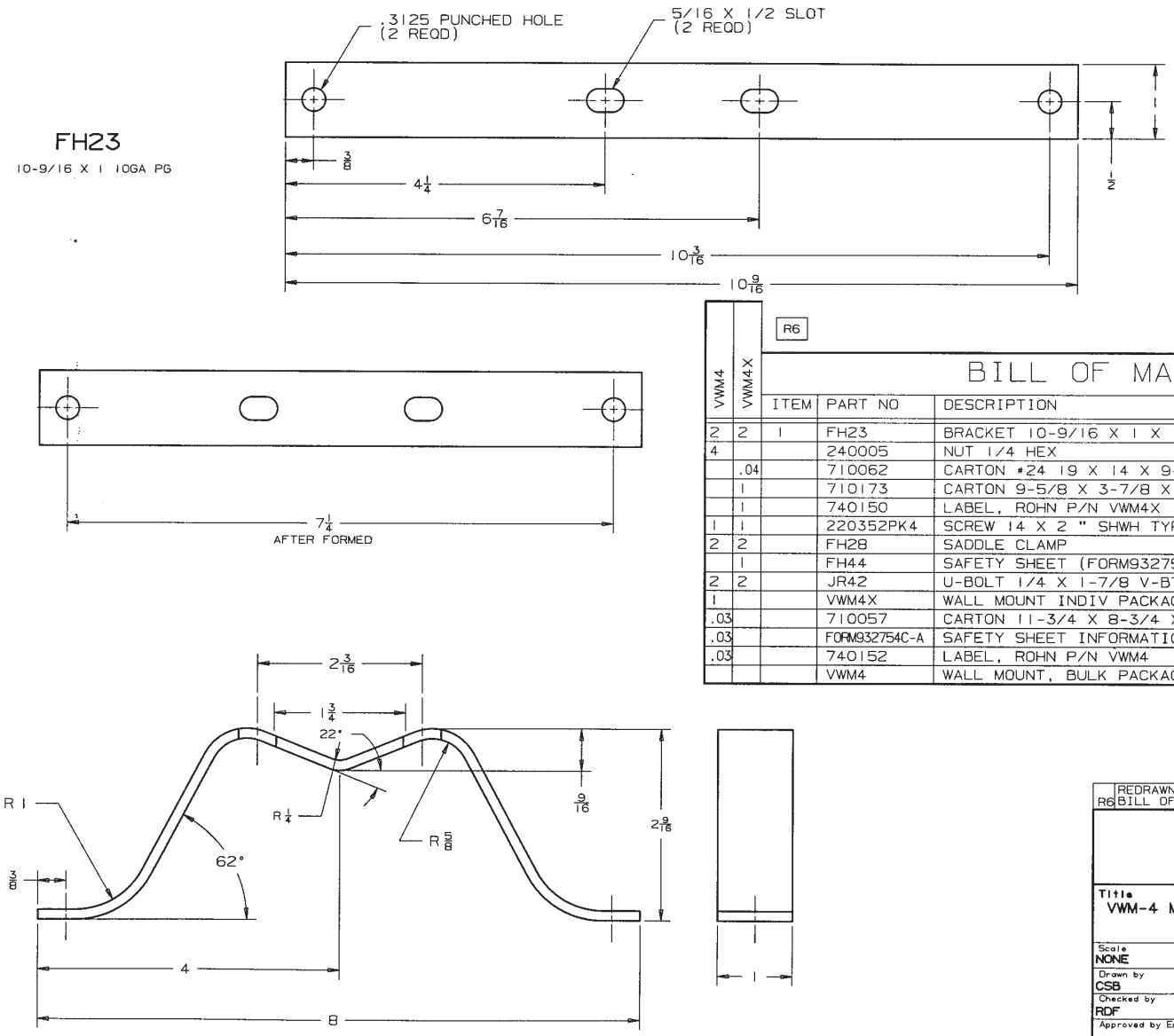

R6

VWM4	VWM4X	ITEM	PART NO	DESCRIPTION		DWG NO
				BILL OF MATERIAL		
2	2	1	FH23	BRACKET 10-9/16 X 1 X 10GA	PG	C791451
4			240005	NUT 1/4 HEX	ZP	PURCHASE
	.04		710062	CARTON #24 19 X 14 X 9-12		PURCHASE
	1		710173	CARTON 9-5/8 X 3-7/8 X 1-3/8 WHITE		PURCHASE
	1		740150	LABEL, ROHN P/N VWM4X		PURCHASE
1	1		220352PK4	SCREW 14 X 2 " SHWH TYPE A	ZP	C960059
2	2		FH28	SADDLE CLAMP		B800961
	1		FH44	SAFETY SHEET (FORM932754C-A)		C910204
2	2		JR42	U-BOLT 1/4 X 1-7/8 V-BTM	ZP	PURCHASE
1			VWM4X	WALL MOUNT INDIV PACKAGE (25/CTN)		C791451
.03			710057	CARTON 11-3/4 X 8-3/4 X 4-13/16		B830004
.03			FORM932754C-A	SAFETY SHEET INFORMATION (TRTS, TV HDWE)		
.03			740152	LABEL, ROHN P/N VWM4		PURCHASE
			VWM4	WALL MOUNT, BULK PACKAGE (36/CTN)		C791451

R6	REDRAWN AND REVISED BILL OF MATERIAL	BEL	10-20-97	BK/AH 10-28

ROHN
FRANKFORT, INDIANA 46041

Title
VWM-4 MAST WALL MOUNT BRACKET

Scale: NONE
Drawn by: CSB — Date: 10-2-97
Checked by: RDF — Date: 10-2-80
Approved by Engineering — Date
Approved by Production — Date
Approved by Sales — Date
Drawing Type : FAB

Unless otherwise specified, dimensions are given in inches. Tolerances are as noted.
± 0-1/32" ±1°
Material — Finish — Weight

File Number
Drawing Number: C791451R6

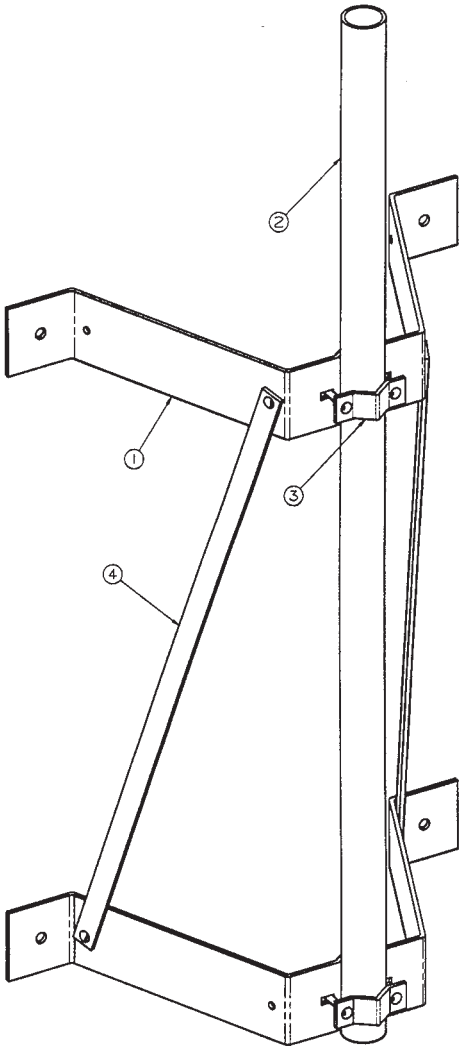

ROHN®

WM212 WITH B12 OPTION

HOT DIP GALVANIZED
AFTER FABRICATION

BILL OF MATERIAL FOR WM212

ITEM	QTY	PART NO	DESCRIPTION
1	2	FH100	BRACKET 27-3/8 X 1/4 X 4
2	1	AM1172G	PIPE 72" LONG X 2" O.D.
3	2	D114	SADDLE CLAMP 3.5" C TO C
	4	230008	NUT 3/8-16 HEAVY HEX
	4	210272G	BOLT 3/8-16 X 2-3/4 CARRIAGE
	4	250007	SPLIT LOCK WASHER 3/8
	4	230007	PAL NUT 3/8

BILL OF MATERIAL FOR B12 OPTION

ITEM	QTY	PART NO	DESCRIPTION
3	2	B12	STRAP 39 X 1/4 X 1-1/4
	4	210273G	BOLT 3/8 X 1 CARRIAGE G5
	4	250007	SPLIT LOCK WASHER 3/8
	4	230007	PAL NUT 3/8
	4	230008	NUT 3/8-16 HEAVY HEX

BILL OF MATERIAL FOR HMK18M OPTION

ITEM	QTY	PART NO	DESCRIPTION
	4	210256G	THREADED ROD 1/2-13 X 18"
	8	230013	NUT 1/2-13 HEAVY HEX
	8	250035G	WASHER 1/2 STD FLAT
	8	230011	NUT 1/2 PAL
	1	380163	3OZ. TUBE OF SLILCONE

1. IT IS THE PURCHASER'S RESPONSIBILTY TO VERIFY THAT HIS INSTALLATION AND BUILDING SYSTEM WILL WITHSTAND ALL LOADS IMPOSED BY HIS ANTENNA SYSTEM.
2. ANTENNA INSTALLATIONS SHOULD BE GROUNDED BY THE INSTALLER TO MEET ALL APPLICABLE CODES.
3. INSPECT THE MOUNT AND ANTENNA EVERY 6 MONTHS.
4. OPTIONAL ROHN HARDWARE MOUNTING KITS MAY BE PURCHASED SEPERATLY FROM ROHN. (PART NO. HMK18M)
5. ALL PARTS ARE HOT DIP GALVANIZED AFTER FABRICATION.
6. FOR ENGINEERING REPORT, REFER TO DRAWING NUMBER D980020.
7. PAL NUTS ARE PROVIDED WITH ALL BOLT ASSEMBLIES.
8. LOCAL ZONING AND/OR BUILDING CODES AND INSURANCE COMPANIES MAY REQUIRE AN ARCHITECT OR STRUCTURAL ENGINEER APPROVAL PRIOR TO INSTALLATION.

ROHN®
FRANKFORT, INDIANA 46041

Title: WM212 WITH OPTIONAL B12 PACKAGE

Scale: NONE
Drawn by: AMD Date: 5-6-98
Checked by: BEL Date: 5-11-98
Approved by Engineering: Date:
Approved by Production: CL Date: 5-19-98
Approved by Sales: Date:
Drawing Type: CATALOG

Unless otherwise specified, dimensions are given in inches. Tolerances are as noted.
Material: Finish: Weight:

File Number: EF4432AD
Drawing Number: D980019

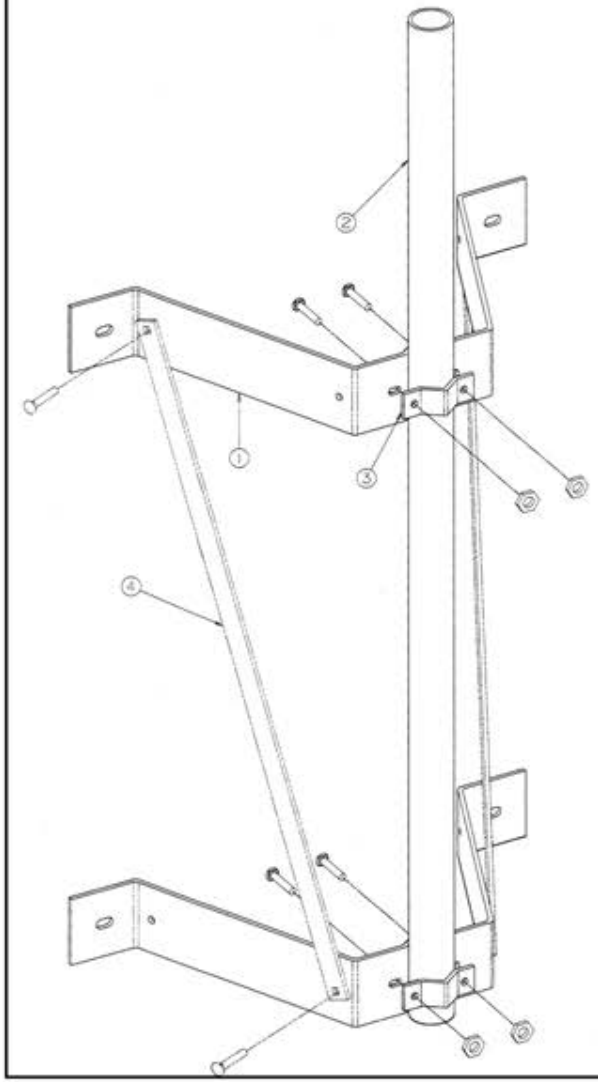

ROHN

WM312 WITH WMB12A OPTION

HOT DIP GALVANIZED
AFTER FABRICATION

1. IT IS THE PURCHASER'S RESPONSIBILTY TO VERIFY THAT HIS INSTALLATION AND BUILDING SYSTEM WILL WITHSTAND ALL LOADS IMPOSED BY HIS ANTENNA SYSTEM.
2. ANTENNA INSTALLATIONS SHOULD BE GROUNDED BY THE INSTALLER TO MEET ALL APPLICABLE CODES.
3. INSPECT THE MOUNT AND ANTENNA EVERY 6 MONTHS.
4. OPTIONAL ROHN HARDWARE MOUNTING KITS MAY BE PURCHASED SEPARATELY FROM ROHN. (PART NO. HMK18M)
5. ALL PARTS ARE HOT DIP GALVANIZED AFTER FABRICATION.
6. FOR ENGINEERING REPORT, REFER TO DRAWING NUMBER D980020.
7. PAL NUTS ARE PROVIDED WITH ALL BOLT ASSEMBLIES.
8. LOCAL ZONING AND/OR BUILDING CODES AND INSURANCE COMPANIES MAY REQUIRE AN ARCHITECT OR STRUCTURAL ENGINEER APPROVAL PRIOR TO INSTALLATION.

BILL OF MATERIAL FOR WM312

ITEM	QTY	PART NO	DESCRIPTION
	1	FH100HDW	HARDWARE PACK F/WM212 & WM312
2	1	FH105	PIPE 72" X 3" X SCH40

BILL OF MATERIAL FOR FH100HDW

ITEM	QTY	PART NO	DESCRIPTION
1	2	FH100	BRACKET 27-5/16 < 4 X 1/4
3	2	WY23	CLAMP LADDER .25 x 1.5 x 7.19
	4	230005	NUT 3/8-16 HEAVY HEX
	4	210503 R2	BOLT 3/8-16 X 4-1/2 FT CARR. G5 HDG
	4	230007	PAL NUT 3/8
	1	740038	DANGER "READ INSTRUCTIONS" LABEL
	1	FORM932754C-A	FORM SAFETY SHEET
	1	FORMC990109	ASSEMBLY DETAILS F/WM213 & WM312
	2	720006	POLY BAG 9 X 13 X 4MILL
	1	740224	WM212 P/N LABEL

BILL OF MATERIAL FOR WMB12A OPTION

ITEM	QTY	PART NO	DESCRIPTION
4	2	WMB12	STRAP 39 X 1/4 X 1-1/4
	4	210273G	BOLT 3/8 X 1 CARRIAGE G5
	4	230005	NUT 3/8-16 HEAVY HEX
	4	230007	PAL NUT 3/8
	1	740224	WMB12A P/N LABEL
	1	720006	POLY BAG 9 X 13 X 4MILL

BILL OF MATERIAL FOR HMK18M OPTION

ITEM	QTY	PART NO	DESCRIPTION
	4	210256G	THREADED ROD 1/2-13 X 18"
	8	230013	NUT 1/2-13 HEAVY HEX
	8	250035G	WASHER 1/2 STD FLAT
	8	230011	NUT 1/2 PAL
	1	380163	SILICONE RUBBER SEALANT
	1	710117	CARTON 1-3/4 X 3-3/4 X 24-1/8
	1	720006	BAG POLY 9 X 13 X 4MILL
	1	FORMD850018	HMK ASSEMBLY SHEET
	1	FORM932754C-A	SAFETY SHEET INFO
	1	740224	HMK18M P/N LABEL

ROHN
FRANKFORT, INDIANA 46041

Title
WM312 WITH OPTIONAL WMB12A PACKAGE

Scale: NONE
Drawn by: DLB Date: 8-24-98
Checked by: MD Date: 8-24-98
Approved by Engineering Date
Approved by Production: DL Date: 8-27-98
Approved by Sales Date
Drawing Type: CATALOG

Unless otherwise specified, dimensions are given in inches. Tolerances are as noted.
Material Finish Weight

Title Number
Drawing Number D980032R1

LOAD CASE	LOAD (LBS)	DEFLECTION (IN)	DIAL READING	COMMENTS
TEST 1 (FULL LOAD)				
1	0	0.000	0.938	
3	50	0.086	0.852	
4	100	0.174	0.764	
5	160	0.273	0.665	
6	210	0.353	0.585	
7	250	0.428	0.510	
8	300	0.492	0.446	
9	350	0.577	0.361	
10	390	0.654	0.284	
11	475	0.807	0.131	Pipe twisted during loading past 500 lbs.
TEST 2 (FULL LOAD)				
1	0	0.000	0.907	
3	160	0.288	0.619	
4	240	0.411	0.496	
5	325	0.547	0.360	
6	375	0.621	0.286	
7	450	0.742	0.165	
8	490	0.799	0.108	
9	500	0.839	0.068	Pipe twisted during loading past 500 lbs.
TEST 3 (LOW LOAD DEFLECTION)				
1	0	0.000	0.871	
2	11	0.019	0.852	
3	20	0.033	0.838	
4	30	0.050	0.821	
5	39	0.064	0.807	
6	49	0.079	0.792	
7	40	0.066	0.805	
8	31	0.052	0.819	
9	23.5	0.040	0.831	
10	15	0.026	0.845	
11	0	0.003	0.868	
TEST 4 (WITH OUT DIAGONAL BRACES)				
1	0	0.000	0.858	
2	12.5	0.018	0.840	
3	20	0.030	0.828	
4	30	0.048	0.810	
5	41	0.064	0.794	
6	49	0.077	0.781	
7	40	0.064	0.794	
8	30.5	0.048	0.810	
9	20	0.033	0.825	
10	12.5	0.020	0.838	
11	0	0.000	0.858	

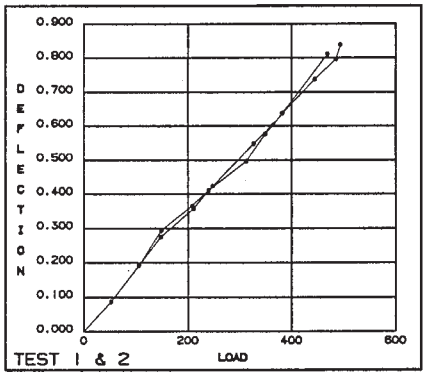

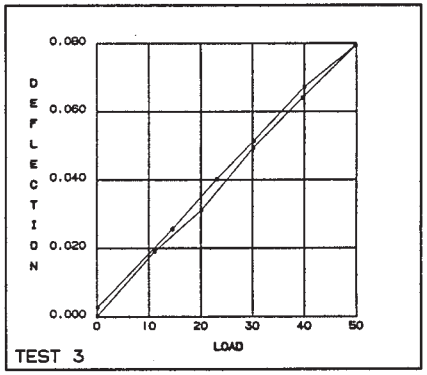

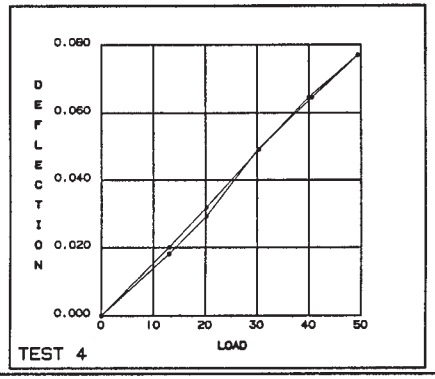

LOADING:
All tests were run with an eccentric horizontal torque arm of 11.5 inches and a vertical dead load of 202 pounds applied with a vertical torque arm of 12.375 inches.
Deflection was recorded using a dial indicator gauge reading to the 0.001 inch. Full load measurement increments were made with a 6000 lb dynamometer with 50 pound increments. Loads between 50 pound increments were estimated.
The actual deflections are the inverse of the dial readings. The actual deflection is derived by subtracting the current dial reading from the initial or zero reading.
Low load tests loads were measured with a 50 pound scale with one pound increments.

TEST 1

Test 1 is a full load test to determine the ultimate load of the wall mount. Load was applied in small increments until failure was observed. Failure occurred by twisting about the pipe clamp connections. No permanent deformation occurred.

TEST 2

Test 2 is a repeat of test 1 after retightening the pipe clamp bolts to 55 foot pounds. The ultimate load observed in test 1 was approached in small increments. The failure mode and load confirmed test 1 results.

TEST 3

Test 3 is a low load test to determine deflection at low operational loads under 50 pounds. The loads and deflections were recorded at various increments up to the limits of the 50 pound scale and then unloaded in a similar fashion.

TEST 4

Test 4 is a repeat of test 3 with the diagonal members removed. The test results are almost identical to test 3 indicating that the braces do not participate in the resistance of the horizontal load.

CONCLUSIONS

A maximum allowable horizontal load of 315 pounds or a maximum twist around the pipe of 3640 in-lbs may be applied to the mount. The maximum allowable vertical load is 130 pounds with a maximum vertical eccentric torque of 1600 in-lbs may be used. these allowable loads include a factor of safety of 1.5.

DIAGONAL BRACES
Diagonal braces are an optional item that is used to reduce the prying action of the wall attachment's bolts. Large vertical loads can cause loosening of the attachment's bolts when the wall mount is attached to a soft surface such as wood or siding.
Diagonal braces are not required when attaching the wall mount to steel. They are recommended when attaching to concrete and concrete block walls with epoxy or wedge anchors that can work loose with time.
Diagonal braces are not required when through-bolted to concrete or concrete block walls. The braces are required on all soft surfaces such as wood, that can deform or shrink behind the mount.

ROHN.
FRANKFORT, INDIANA 46041

Title
ENGINEERING REPORT FOR WM212

Scale: NONE
Unless otherwise specified, dimensions are given in inches. Tolerances are as noted.
Drawn by AMD Date 5-14-98
Checked by Date
Material Finish Weight
Approved by Engineering Date
This drawing is the property of ROHN. It is not to be reproduced, copied or traced in part without our written consent.
Approved by Production Date DL 5-19-98
File Number EF4432AD
Approved by Sales Date
Drawing Number D980020
Drawing Type - CATALOG

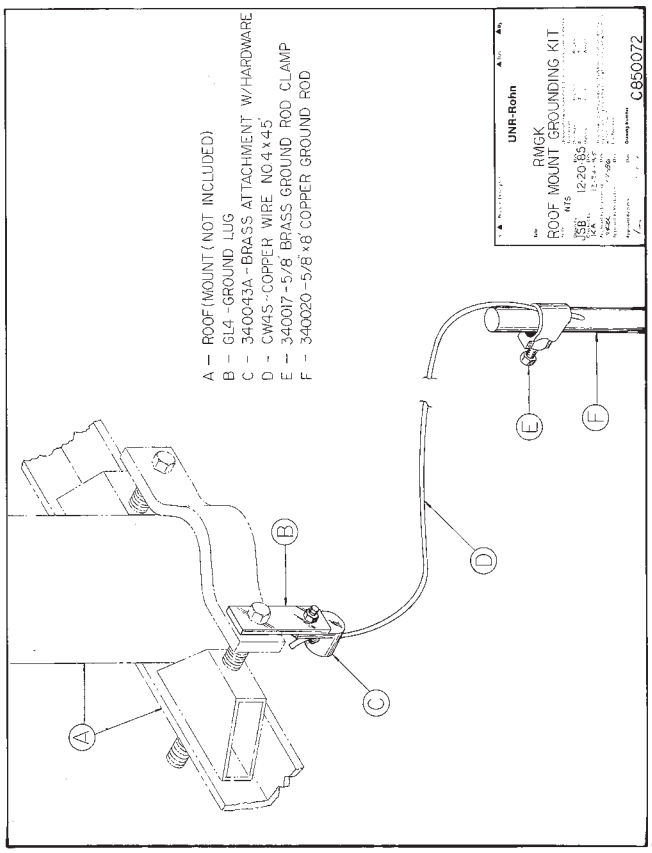
A – ROOF (MOUNT (NOT INCLUDED)
B – GL4 -GROUND LUG
C – 340043A-BRASS ATTACHMENT W/HARDWARE
D – CW4S-COPPER WIRE NO.4 x 45'
E – 340017-5/8' BRASS GROUND ROD CLAMP
F – 340020-5/8' x 8' COPPER GROUND ROD
A
B
C
D
E
F
UNR-Rohn
RMGK
ROOF MOUNT GROUNDING KIT
C850072

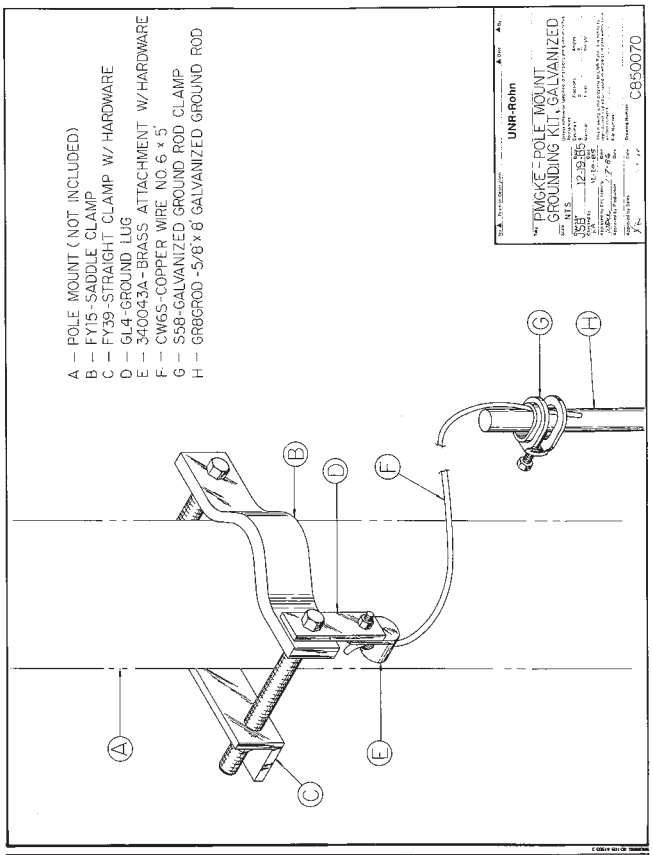
A – POLE MOUNT (NOT INCLUDED)
B – FY15-SADDLE CLAMP
C – FY39-STRAIGHT CLAMP W/ HARDWARE
D – GL4-GROUND LUG
E – 340043A-BRASS ATTACHMENT W/HARDWARE
F – CW6S-COPPER WIRE NO. 6 x 5'
G – S58-GALVANIZED GROUND ROD CLAMP
H – GR8GROD-5/8' x 8' GALVANIZED GROUND ROD
A
B
C
D
E
F
G
H
UNR-Rohn
PMGKE-POLE MOUNT
GROUNDING KIT, GALVANIZED
C850070

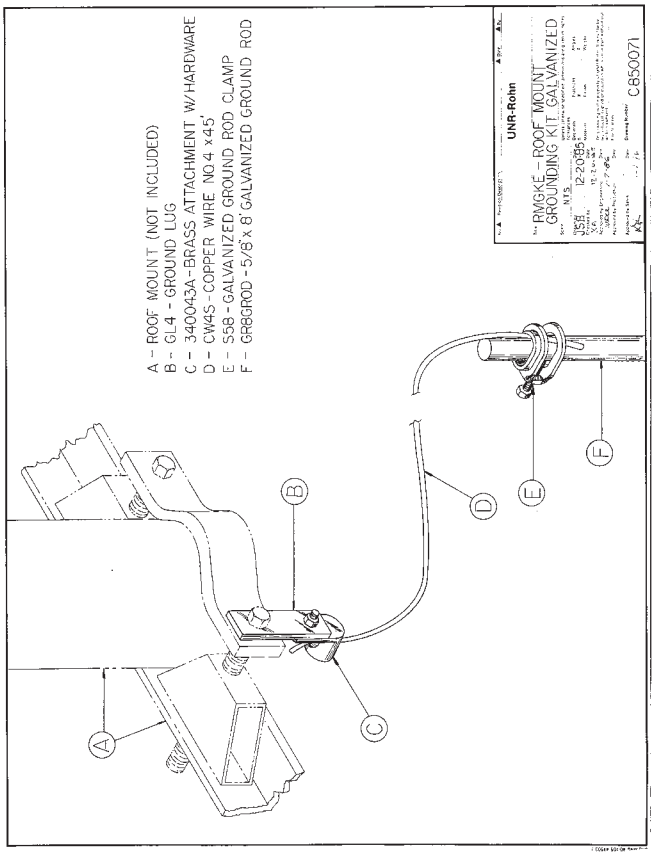
A – ROOF MOUNT (NOT INCLUDED)
B – GL4 - GROUND LUG
C – 340043A-BRASS ATTACHMENT W/HARDWARE
D – CW4S-COPPER WIRE NO.4 x 45'
E – S58-GALVANIZED GROUND ROD CLAMP
F – GR8GROD-5/8' x 8' GALVANIZED GROUND ROD
A
B
C
D
E
F
UNR-Rohn
PMGKE – ROOF MOUNT
GROUNDING KIT, GALVANIZED
C850071

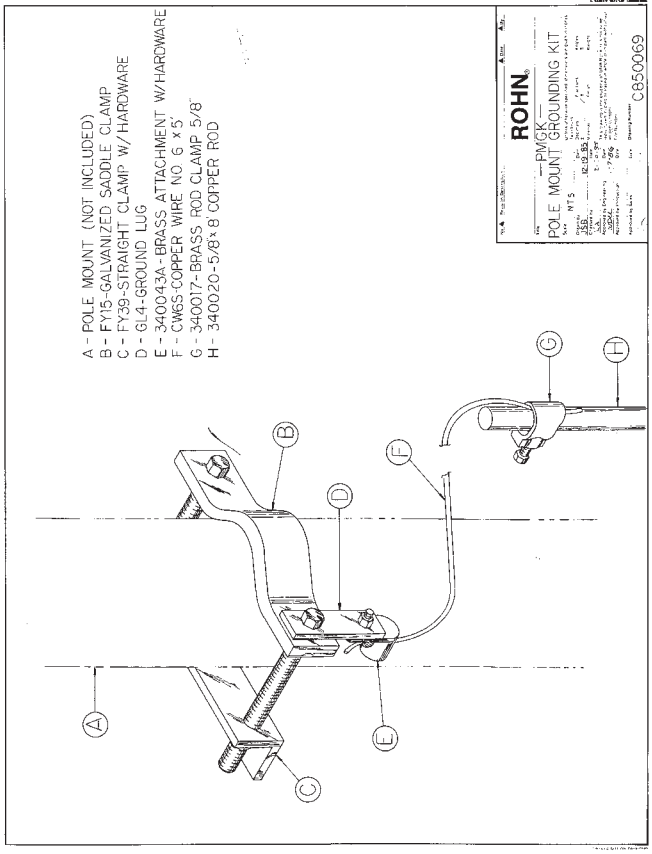
A - POLE MOUNT (NOT INCLUDED)
B - FY15-GALVANIZED SADDLE CLAMP
C - FY39-STRAIGHT CLAMP W/HARDWARE
D - GL4-GROUND LUG
E - 340043A-BRASS ATTACHMENT W/HARDWARE
F - CW6S-COPPER WIRE NO. 6 x 5'
G - 340017-BRASS ROD CLAMP 5/8"
H - 340020-5/8' x 8' COPPER ROD
A
B
C
D
E
F
G
H
ROHN
PMGK
POLE MOUNT GROUNDING KIT
C850069

Blank

ROHN™ Products

HARDWARE/ACCESSORIES

PRODUCTS FOR A GROWING WORLD OF TECHNOLOGY

Blank

BOLTS, NUTS AND WASHERS

Grade 5 Capscrew Assemblies - Hot Dip Galvanized

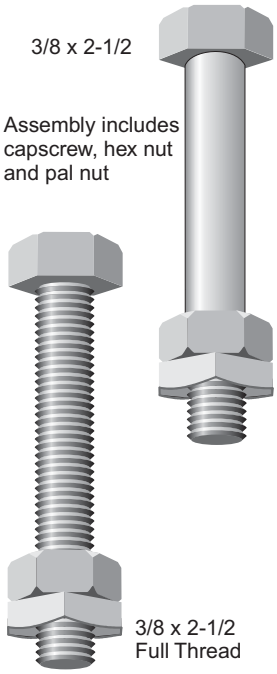

Description	Capscrew Part No.	Capscrew Weight	Hex Nut Part No.	PalNut Part No.	Assembly Part No.	Assembly Weight
5/16 x 2-3/8	210003G	5/100	230002	230001	210003GA	7/100
3/8 x 1-1/4	210005G	5/100	230005	230007	210005GA	10/100
3/8 x 1-1/2	210008G	5/100	230005	230007	210008GA	10/100
3/8 x 2	210009G	7/100	230005	230007	210009GA	12/100
3/8 x 2-1/2	210011G	8/100	230005	230007	210011GA	13/100
3/8 x 2-1/2 (Full Thread)	210176G	8/100	230005	230007	210176GA	13/100
3I8 x 4	210014G	13/100	230005	230007	210014GA	18/100
3/8 x 4 (Full Thread)	210013G	18/100	230005	230007	210013GA	18/100
7/16 x 2-1/2	210016G	17/100	230009	230010	210016GA	17/100
1/2 x 5	210083G	32/100	230013	230011	210083GA	41/100
5/8 x 1-3/4	210146G	22/100	230018	230017	210146GA	35/100
5/8 x 2	210140G	25/100	230018	230017	210140GA	38/100
5/8 x 3-1/4	210036G	38/100	230018	230017	210036GA	51/100
5/8 x 3-3/4	210038G	40/100	230018	230017	210038GA	53/100
3/4 x 4-1/2	210091G	71/100	230020	230021	210091GA	91/100
7/8 x 3	210062G	71/100	230026	230026	210062GA	103/100

Grade 5 Capscrew Assemblies - Zinc Plated

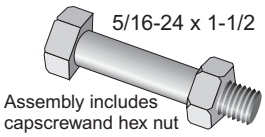

Description	Assembly Part No.	Weight	Hex Nut Part No.
1/4-28 x 1-1/2	220029	3/100	240009
5/16-24 x 1-1/2	220037	4/100	240016

Rigid Tube Bolt Assemblies, Hot Dip Galvanized

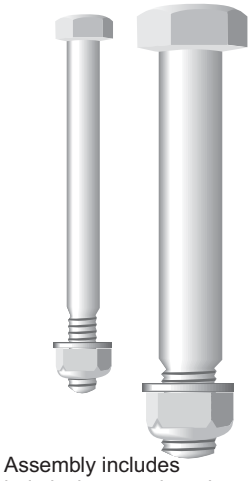

Description	Bolt Part No.	Bolt Weight	Lock Nut Part No.	Washer Part No.	Assembly Part No.	Assembly Weight
[1] J-Joint (5 /16" - 18 THD)	J071	8/100	230003	250008G	J07	89/100
[2] J-Brace (5/16" - 18 THD)	210003G	5/100.	230003	250008G	J08	336/100
[3] C-Joint (1/2"-13THD)	C071	30/100	230012	250011G	C07	660/100
C-Joint (1/2"-13THD)	C071 (9 req'd)	30/100	230012 (15req'd)	250011G (9 req'd)	C07L	540/100
(Long)(1/2"- 13THD)	CO71L (6 req'd)					
[4] C-Brace (5/16" - 18 THD)	C081		230003	250008G	C08	420/100
[5] D-Joint (5/8" - 11 THD)	D071	61/100	Discont.		N/A	
D-Joint (5/8" - 11 THD)	D071	61/100	Discont.		N/A	
	(9 req'd)					
(Long) (5/8" - 11 THD)	D071L	64/100				
	(6 req'd)					
[6] D-Brace (5/16" - 18 THD)	D081	230003	250008G		D08	630/100

Notes to Rigid Tube Bolt Assemblies

1 Assembly includes 9 bolts, lock nuts and washers.
2 Assembly includes 21 bolts, lock nuts and washers.
3 Assembly includes 15 bolts,lock nuts and washers.
4 Assembly includes 30 bolts, lock nuts and washers.
5 Assembly includes 15 bolts, and washers.
6 Assembly includes 30 bolts, lock nuts and washers

Structural Bolt Assemblies - Hot Dip Galvanized

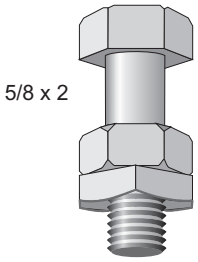

Assembly includes bolt, hex nut and pal nut

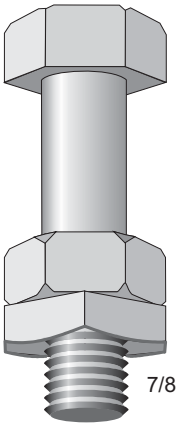

Description	Capscrew		Hex Nut	PalNut	Assembly	
	Part No.	Weight	Part No.	Part No.	Part No.	Weight
1/2 x 1-1/4	210017G	12/100	230013	230011	210017GA	21/100
1/2 x 1-1/2	210018G	13/100	230013	230011	210018GA	22/100
1/2 x 1-3/4	210019G	15/100	230013	230011	210019GA	24/100
1/2 x 2	210020G	16/100	230013	230011	210020GA	25/100
5/8 x 1-1/2	210029G	21/100	230018	230017	210029GA	34/100
5/8 x 1-3/4	210030G	36/100	230018	230017	210030GA	36/100
5/8 x 2	210031G	25/100	230018	2320017	210031GA	38/100
5/8 x 2-1/4	210032G	29/100	230029	230017	210032GA	42/100
5/8 x 2-1/2	210033G	30/100	230018	230017	210033GA	43/100
5/8 x 3-1/4	210072G	32/100	230018	230017	210072GA	45/100
3/4 x 1-3/4	210046G	38/100	230020	230021	210046GA	58/100
3/4 x 2	210047G	41/100	230020	230021	210047GA	61/100
3/4 x 2-1/4	210048G	42/100	230020	230021	210048GA	62/100
3/4 x 2-1/2	210049G	46/100	230020	230021	210049GA	66/100
3/4 x 2-3/4	210050G	50/100	230020	230021	210050GA	70/100
3/4 x 4-1/2	210057G	71/100	230020	230021	210057GA	91/100
3/4 x 5	210058G	74/100	230020	230021	210058GA	94/100
3/4 x 5-1/2	210059G	84/100	230020	230021	210059GA	104/100
7/8 x 2-1/4	210061G	62/100	230062	230025	210061GA	94/100
7/8 x 3-1/2	210063G	81/100	230026	230025	210063GA	113/100
1 x 4-1/4	210069G	127/100	230030	230029	210069GA	172/100
1 x 5-1/2	210070G	152/100	230030	230029	210070GA	197/100
1 x 5-3/4	210164G	159/100	230030	230029	210164GA	204/100

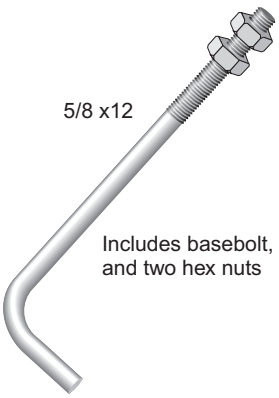

Includes basebolt, and two hex nuts

Base Bolt - Hot Dip Galvanized

Description	Part Number	Weight
1/2" x 12" + 2" (Hook)	1/2x12BB	1/2 ea.
5/8" x 12" + 3" (Hook)	5/8X12BB	1 ea.
3/4" x 16" + 3" (Hook)	3/4X16BB	1-1/2 ea.

Step Bolt - Hot Dip Galvanized

Description	Part Number	Weight
5/8 x 6-1/2 (2-1/2" thread length	210042G	84/100
Same as above - includes 2 hex nuts	5/8STEP	108/100

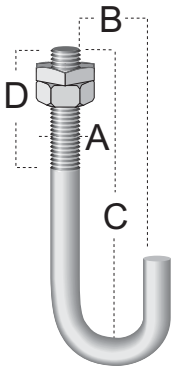

J Bolt - Hot Dip Galvanized

Description				Part No.	Weight
A	B	C	D		
3/8	5/8	4	2-5/8	J44AA	16/100
3/8	5/8	5-11/16	2-3/4	J51A	23/100
3/8	5/8	6-13/16	2-1/2	J107A	35/100
3/8	3/4	2	1-1/2	J167A	10/100

Round Bend U-Bolt Assemblies - Hot Dip Galvanized

How to measure U-Bolts

A Diameter of thread
B Width of opening
C Depth of opening
D Length of threaded area

Assembly includes bolt, hex nuts and pal nuts

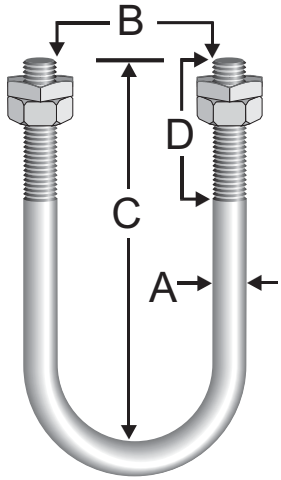

Parts can be ordered separately. Prices and weights for Hex Nuts and Pal Nuts are located elsewhere in this catalog.

Description				U-Bolt		HexNut	PalNut	Assembly	
A	B	C	D	PartNo.	Weight	Part No.	Part No.	Part No.	Weight
5/16	1-1/2	2-5/8	1-1/4	JR51	11/100	230002	230001	JR51A	15/100
5/16	1-11/16	2-1/4	1	JR54	11/100.	230002	230001	JR54A	15/100
5/16	1-1/2	2	1-1/4	JR55	10/100	230002	230001	JR55A	14/100
3/8	2-1/2	4	2	JR60	25/100	230005	230007	JR60A	35/100
3/8	2-1/2	3-1/2	1-1/2	JR61	23/100	230005	230007	JR61A	33/100
3/8	4	6	2-1/4	JR62	32/100	230005	230007	JP62A	42/100
3/8	4-1/2	6-1/2	2-1/4	JR63	42/100	230005	230007	JR63A	52/100
3/8	3-1/2	4-5/8	1-5/8	JR64	31/100	230005	230007	JR64A	41/100
3/8	1-1/2	3	1-3/4	JR65	19/100	230005	230007	JR65A	29/100
3/8	1-1/4	2-3/4	1-5/8	JR66	21/100	230005	230007	JR66A	31/100
3/8	1	2-1/4	1-1/4	JR67	13/100	230005	230007	JR67A	23/100
3/8	2-1/8	3	1-1/4	JR68	23/100	230005	230007	JR68A	31/100
3/8	13/16	1-5/8	7/8	JR69	11/100	230005	230007	JR69A	21/100
1/2	3/4	3-1/2	2-1/2	JR81	42/100	230013	230011	JR81A	60/100
1/2	2-1/4	4-1/2	2-1/4	JR82	53/100	230013	230011	JR82A	71/100
1/2	2-1/2	4-1/2	2-1/2	JR83	53/100	230013	230011	JR83A	71/100
1/2	3	5-5/8	3	JR84	66/100	230013	230011	JR84A	84/100
1/2	3	4-1/8	1-1/2	JR84S	55/100	230013	230011	JR84SA	73/100
1/2	4-1/2	6	2-1/4	JR85	73/100	230013	230011	JR85A	91/100
1/2	5-5/8	8	3-1/4	JR86	96/100	230013	230011	JR86A	114/100
1/2	6-3/4	9	3-1/4	JR87	109/100	230013	230011	JR87A	127/100
1/2	3-1/2	6	3	JR88	70/100	230013	230011	JR88A	88/100
1/2	4	6-1/2	3-1/2	JR89	10080/	230013	230011	JR89A	98/100
1/2	2	3-3/4	1-3/4	JR810	45/100	230013	230011	JR810A	63/100
1/2	8-3/4	11-1/8	2-1/2	JR90S	170/100	230013	230011	JR90SA	188/100
1/2	10-7/8	13	2-1/2	JR110	180/100	230013	230011	JR110A	198/100
1/2	12-7/8	15	2-1/2	JR120	225/100	230013	230011	JR120A	243/100
3/4	3	5-3/4	3	JR121	159/100	230020	230021	JR121A	199/100
3/4	3-1/2	6-1/4	2-3/4	JR122	223/100	230020	230021	JR122A	263/100
3/4	4	6-3/4	2-1/2	JR123	244/100	230020	230021	JR123A	284/100
3/4	4-1/2	7-1/4	2-1/2	JR124	240/100	230020	230021	JR124A	280/100
3/4	5-5/8	8-5/16	2-1/2	JR125	278/100	230020	230021	JR125A	318/100
3/4	6-3/4	10	3-1/2	JR126ST	350/100	230020	230021	JR126STA	390/100
3/4	8-3/4	11-3/8	2-1/2	JR128	384/100	230020	230021	JR128A	424/100
3/4	10-7/8	13-3/8	2-5/8	JR1210	477/100	230020	230021	JR1210A	517/100
3/4	12-3/4	15	2-1/2	Jr1212	551/100	230020	23021	JR1212A	591/100

Round Bend U-Bolt Assemblies - Zinc Plated

Not Illustrated
Zinc Plated U-bolt Assembly includes bolt and hex nuts

Description				Part Number	Weight
A	B	C	D		
1/4-20	1-1/4	2 -1/4	1-3/8	JR45A	12/100

Square Bend U-Bolt Assemblies - Hot Dip Galvanized

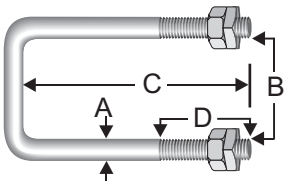

Assembly includes bolt, hex nuts and pal nuts

Description				Part Number	Weight
A	B	C	D		
1/2	3-1/4	4-3/8	1-1/4	JR811A	73/100
1/2	4-1/4	5-5/16	1-1/4	JR812A	87/100
1/2	4-1/4	5-13/16	1-3/4	JR812LA	91/100
3/4	6-1/4	8-1/2	2-1/2	JR12685SQA	277/100
1/2	6-1/4	7-13/16	1-3/4	JR815A	120/100

Double Bend U-Bolt Assemblies - Hot Dip Galvanized

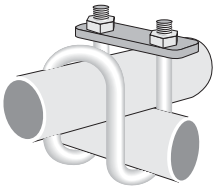

Description	Part Number	Weight
5/16" (-l8THD/ (for 1-1/4" to 1-1/4 tubing)	TB5125BA	54/100
Pal Nut, 5/16" (-18THD) (Optional)	230001	1/100
1/2" (18THD)/ for 2" to 2" pipe	TB8250	1.7
Backing Plate for TB8250	BP8250	1

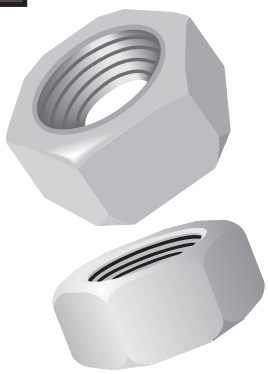

Nuts, Heavy Hex - Hot Dip Galvanized

Description	Part Number	Weight
3/8"-16	230005	4/100
1/2"-13	230013	8/100
5/8-11	230018	12/100
3/4" -10	230020	19/100
7/8" -9	230026	29/100
1" -8	230030	41/100

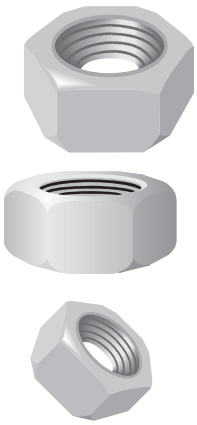

Nuts, Finished Hex - Zinc Plated

Description	Part Number	Weight
1/4 - 20	240005	1/100
1/4" - 28	240009	1/100
5/16"-18	240014	1/100
5/16"- 24	240016	1/100
3/8"- 16	240021	2/100

Nuts, Finished Hex - Hot Dip Galvanized

Description	Part Number	Weight
5/16"- 18	230002	84/100
7/16" - 14	230009	3/100

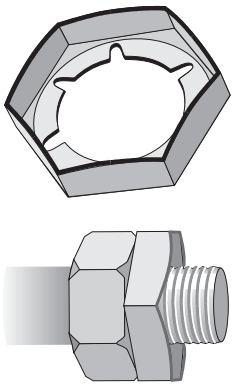

Locking Pal Nuts - Hot Dip Galvanized

Description	Part Number	Weight
5/16" - 18	230001	1/100
3/8" -16	230007	1/100
1/2" - 13	230011	1/100
5/8"-11	230017	1/100
3/4" -10	230021	2/100
7/8"-9	230025	3/100
1" - 8	230029	5/100

Palnuts thread down bolt, tightening against the nut to prevent the nut from loosening. Open side of Palnut faces out.

Nuts, Anco Lock - Hot Dip Galvanized

Description	Part Number	Weight
3/8" - 16	230008	2/100
1/2".- 13	230015	7/100
5/8"-11	230019	12/100
3/4"-10	230022	19/100
7/8" -9	230027	30/100
1" -8	230028	43/100

Flat Washers, SAE - Hot Dip Galvanized

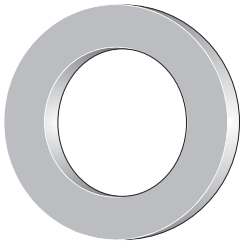

Description	Part Number	Weight
5/16"	250005G	1/100
3/8"	250008G	1/100
9/16"	250011G	2/100
5/8"	250012G	3/100
3/4"	250017G	5/100
7/8"	250032G	6/100
1"	250018G	8/100

Beveled Washers - Hot Dip Galvanized

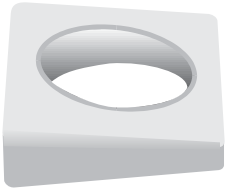

Description	Part Number	Weight
3/8"	250040G	7/100
1/2"	250010G	7/100
5/8"	250013G	15/100
3/4"	250016G	6/100
7/8"	250062G	14/100
1"	250077G	31/100

Ringfills - Hot Dip Galvanized

Description			Part Number	Weight
Thickness	ID	OD		
1/4	11/16	2	KH390	.2
5/16	11/16	2	KH3423	.26
3/8	9/16	1-1/2	KH386	.16
3/8	11/16	1-1/2	KH391	.14
7/16	13/16	2	Kh3424	.34

GUY MATERIALS

Thimbles - Hot Dip Galvanized

Description	Part Number	Weight
1/4" Standard Wire Rope Thimble, Open (for 1/8" to 3/16" wire with cable clamps)	1/4TH	4/100
5/16" Heavy Duty Wire Rope Thimble Open (for 3/16" wire with Big-Grips)	5/16THH	12/100
3/8" Standard Wire Rope Thimble Open (for 1/4" wire with cable clamps)	3/8TH	6/100
3/8" Heavy Duty Wire Rope ThimbleOpen (for 1/4" wire with Big-Grips or 5/16" wire with cable clamps)	3/8THH	25/100
7/16" Heavy Duty Wire Rope Thimble Open (for 5/16" wire with Big-Grips)	7/I6THH	30/100
1/2" Heavy DutyWire Rope Thimble Open (for 3/8" or 7/16" wire with cable clamps or 3/8" wire with Big-Grips)	1/2THH	51/100
9/16" Heavy Duty Wire Rope ThimbleOpen (for 7/16" wire with Big-Grips)	9/16THH	51/100
5/8" Heavy Duty Wire Rope Thimble Open (for 1/2" or 9/16" wire with cable clamps or Big-Grips)	5/8THH	75/100
3/4" Heavy Duty Wire Rope Thimble Open (for 5/8" wire with cable clamps or Big Grips)	3/4THH	147/100
7/8" Heavy Duty Wire Rope Thimble Open (for 3/4" wire with Big-Grips)	7/8THH	175/100
1" Heavy Duty Wire Rope Thimble Open (for 7/8" wire with Big Grips)	1THH	275/100

Cable Clamps - Hot Dip Galvanized

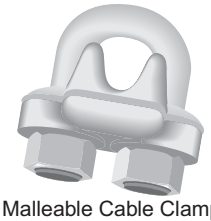

Malleable Cable Clamp

Forged Cable Clamp

Description	Part Number	Weight
1/8" Cable Clamp, Malleable (3 per turnback)	1/8CCM	3/100
3/16" Cable Clamp, Malleable (3 per turnback)	3/16CCM	8/100
1/4" Cable Clamp, Malleable (3 per turnback)	1/4CCM	12/100
3/16" Cable Clamp, Forged (3 per turnback)	3/16CCF	10/100
1/4" Cable Clamp, Forged (3 per turnback)	1/4CCF	20/100
5/16" Cable Clamp, Forged (3 per turnback)	5/16CCF	30/100
3/8" Cable Clamp, Forged (3 per turnback)	3/8CCF	47/100
7/16" Cable Clamp, Forged (4 per turnback)	7/16CCF	76/100
1/2" Cable Clamp, Forged (4 per turnback)	1/2CCF	80/100
9/16" Cable Clamp, Forged (4 per turnback)	9/16CCF	104/100
5/8" Cable Clamp, Forged (4 per turnback)	5/8CCF	106/100
1-1/4" Cable Clamp, Forged (6 per turnback)	11/4CCF	430/100
1-3/8" Cable Clamp, Forged (7 per turnback)	13/8CCF	460/100

Fist Grips - Hot Dip Galvanized

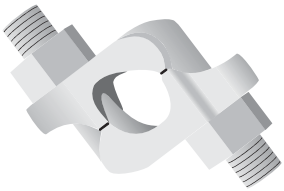

Description	Part Number	Weight
1/2" Fist Grip (4 per turnback)	1/2FG	70/100
5/8" Fist Grip (4 per turnback)	5/8FG	100/100
3/4" Fist Grip (5 per turnback)	3/4FG	175/100
7/8" Fist Grip (5 per turnback)	7/8FlSTGR	225/100

Anchor Shackles, Round Pin

Description	Part Number	Weight
3/8" (1 ton safe working load)	3/8S	25/100
1/2" (2 ton safe working load)	1/2S	70/100
5/8" (3-1/4 ton safe working load)	5/8S	150/100
3/4" (4-3/4 ton safe working load)	3/4S	232/100
7/8" (6-1/2 ton safe working load)	7/8S	340/100
1" (8-1/2 ton safe working load)	1S	500/100
1-1/8" (9-1/2 ton safe working load)	11/8S	700/100
1-1/4" (12 ton safe working load)	11/4S	975/100

Turnbuckles - Hot Dip Galvanized

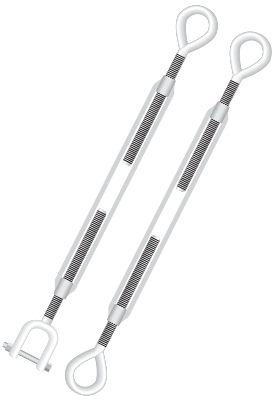

Description	Part Number	Weight
3/8"x6" Eye& Eye Tumbuckle (6,000 lbs. ultimate strength)	3/8TBE&E	1
3/8"x6" Eye & Jaw Tumbuckle (6,000 lbs. ultimate strength)	3/8TBE&J	1
1/2"x12" Eye & Eye Turnbuckle (11,000 lbs. ultimate srength)	1/2TBE&E	2
1/2"x12" Eye& Jaw Turnbuckle (11,000 lbs. ultimate strength)	1/2TBE&J	2
5/8"x12" Eye & Jaw Turnbuokle (17,500 lbs. ultimate strength)	5/8TBE&J	4
3/4"x12" Eye & Jaw Turnbuckle (26,000 lbs. ultimate strength)	3/4TBE&J	5
7/8"x12" Eye & Jaw Turnbuckle (36,000 lbs. ultimate strength)	7/8TBE&J	8
1"x12" Eye & Jaw Turnbuckle (50,000 lbs. ultimate strength)	1TBE&J	11
1-1/4"x18" Eye& Jaw Turnbuckle (76,000 lbs. ultimate strength)	11/4x18TB	24
1-1/2"x18" Eye& Jaw Turnbuckle (107,000 lbs. ultimate strength)	11/2x18TB	35
1-3/4"x18" Eye& Jaw Turnbuckle (140,000 lbs. ultimate strength)	13/4x18TB	54

Eyebolt - Hot Dip Galvanized

Description	Part Number	Weight
5/8" x 18" Eye Bolt with nuts	260004P	2

Guy Strain Insulators, Porcelain

502
504
506

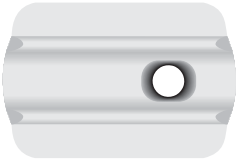

556
24369
24213

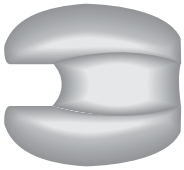

Description	Part Number	Weight
Porcelain Guy Strain Insulator (10,000 lbs. ultimate strength)	502	1
Porcelain Guy Strain Insulator (12,000 lbs. ultimate strength)	504	1-1/2
Porcelain Guy Strain Insulator (20,000 lbs. ultimate strength)	506	3
Porcelain Guy Strain Insulator (33,000 lbs. ultimate strength)	559	5
Porcelain Guy Strain Insulator (42,000 lbs. ultimate strength) (special order only)	24369	4-1/2
Porcelain Guy Strain Insulator (57,000 lbs. ultimate strength) (special order only)	24213	7

To arrive at safe working load for insulators appropriate safety factor must be applied.

Insulators, 24 Feet Long

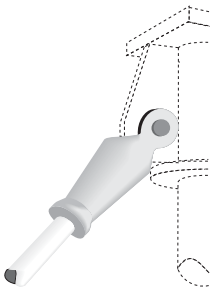

Description	Part Number	Weight
24' Fiberglass Insulator(15,000 lbs. ultimate strength) For use with 3/16" to 3/8" EHS guy wire	500288	20
24' Fiberglass Insulator(30,000 lbs. ultimate strength) For use with 3/16" to 1/2" EHS guywire	703288	34
24' Fiberglass Insulator(36,000 lbs. ultimate strength) For use with 3/16" to 9/16" EHS guy wire	360288	40
24' Fiberglass Insulator(80,000 lbs. ultimate strength) For use with 9/16" through 7/8" EHS guy wire	800288	60

To arrive at safe working load for insulators appropriate safety factor must be applied.

Big Grips - Hot Dip Galvanized

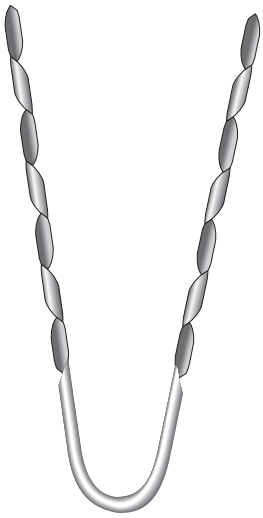

Description	Part Number	Weight
3/16" Galvanized Big-Grip with end sleeve	BG2142	33/100
1/4" Galvanized Big-Grip with end sleeve	BG2144	50/100
5/16" Galvanized Big-Grip with end sleeve	BG2146	82/100
3/8" Galvanized Big-Grip with end sleeve	BG2147	112/100
7/16" Galvanized Big-Grip with end sleeve	BG2148	188/100
1/2" Galvanized Big-Grip with end sleeve	BG2115	315/100
9/16" Galvanized Big-Grip with end sleeve	BG2116	480/100
5/8" Galvanized Big-Grip with end sleeve	BG2111	650/100
3/4" Galvanized Big-Grip with end sleeve	BG2112	1080/100
7/8" Galvanized Big-Grip with end sleeve	BGMS7023	1125/100
1" Galvanized Big-Grip with end sleeve for use with 1" EHS and wth 1" Bridgestrand when capacity does not exceed 104.5 KIPS	BGMS7047	2540/100
1" Rocket Socket with Ear Clamp for use with 1" Bridgestrand when capacity does not exceed 122KIPS	RK0516	46
Guy Link, required for Rocket Socket	GL11/4	73/100

End sleeves must be used on all Big-Grips. See Drawing B700607 for procedure to apply end sleeve.
Oversized heavy duty thimbles must be used with all Big-Grips. Thimbles are not required when using Rocket Sockets.
Rocket Socket requires Guy Link at guy wire to tower connection.

End Sleeves - Hot Dip Galvanized

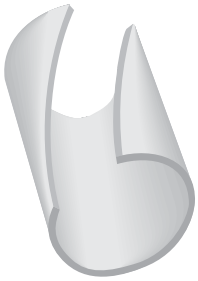

Description	Part Number	Weight
3/16"	GC65303	3/100
1/4"	GC65136	3/100
5/16"	GC65128	3/100
3/8"	GC65264	5/100
7/16"	GC65265	7/100
1/2"	GC65266	10/100
9/16"	GC65267	11/100
5/8"	GC65268	14/100
3/4"	GC65269	21/100
7/8"	GC65270	27/100
1"	Gc65271	32/100

Guy Wire - Hot Dip Galvanized

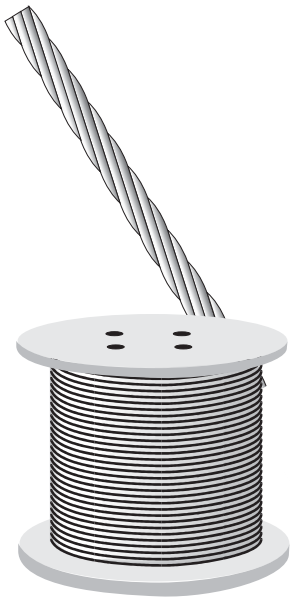

Description	Part Number	Weight
3/16" EHS x 500' coil (3,990 lbs. breaking strength)	3/16EHS500	73/MFT
3/16" EHS x 1,000' coil (3,990 lbs. breaking strength)	3/16EHS1000	73/MFT
3/16" EHS x cut length (3,990 lbs. breaking strength)	3/16EHS	73/MFT
1/4" EHS x 500' coil (6,650 lbs. breaking strength)	1/4EHS500	120/MFT
1/4" EHS x 1,000' coil (6,650 lbs. breaking strength)	1/4EHS1000	120/MFT
1/4" EHS x cut length (6,650 lbs. breaking strength)	1/4EHS	120/MFT
5/16" EHS x cut length (11,200 lbs. breaking strength)	5/16EHS	205/MFT
3/8" EHS x cut length (15,400 lbs. breaking strength)	3/8EHS	273/MFT
7/16" EHS x cut length (20,800 lbs. breaking strength)	7/16EHS	399/MFT
1/2" EHS x cut length (26,900 lbs. breaking strength)	1/2EHS	517/MFT
9/16" EHS x cut length (35,000 lbs. breaking strength)	9/16EHS	671/MFT
5/8" EHS x cut length (42,400 lbs. breaking strength)	5/8EHS	813/MFT
3/4" EHS x cut length (58,300 lbs. breaking strength)	3/4EHS	1155/MFT
7/8" EHS x cut length (79,700 lbs, breaking strength)	7/8EHS	1581MFT
1" Structural strand x cut length (122,000 lbs. breaking strength)	1BS	2100MFT

To arrive at safe working load for guy wire appropriate safety factor must be applied.
There is an additional charge for coiling large quantities of individual length guy wire onto wooden spools for shipment.
ROHN reserves the right to charge for cutting.

Anchor Rods

Part No.	Equalizer Plate Type	Dimensions in inches						Weight (Lbs.)	Allowable Load (Lbs.)*
		L	A	B	C	D	T		
GAR30	eye	84	1		2	5/8		9	7,330
GAC303	EE	84	2			5/8	3/16	13	7,330
GAC305	EE	84	2			5/8	3/16	14	7,330
GAC345501	EJ	84	2	12	2-1/2	3/4	3/8	25	17,670
GAC565501	EJ	120	2-1/2	12	3	1-1/4	1/2	65	49,060
GAG575501	EJ	168	3	12	4	1-7/16	3/4	125	64,800
GAC585501	EJ	192	4	12	6	1-1/4	1	220	98,100
GAC595501	EJ	240	4	18	6	1-7/16	1	310	129,700

*Allowable load includes a 33-1/3% increase in allowable stresses.

Type EJ equalizer plates are used with eye and jaw turnbuckles.

Type EE equalizer plates are supplied in pairs for eye and eye turnbuckles.

Part number suffixes 3,5, and 55 denote 3, or 5 holes in plates.

Type GAC30 or GAC305 rods are supplied with type EP25343 or EP25345 equalizer plates.

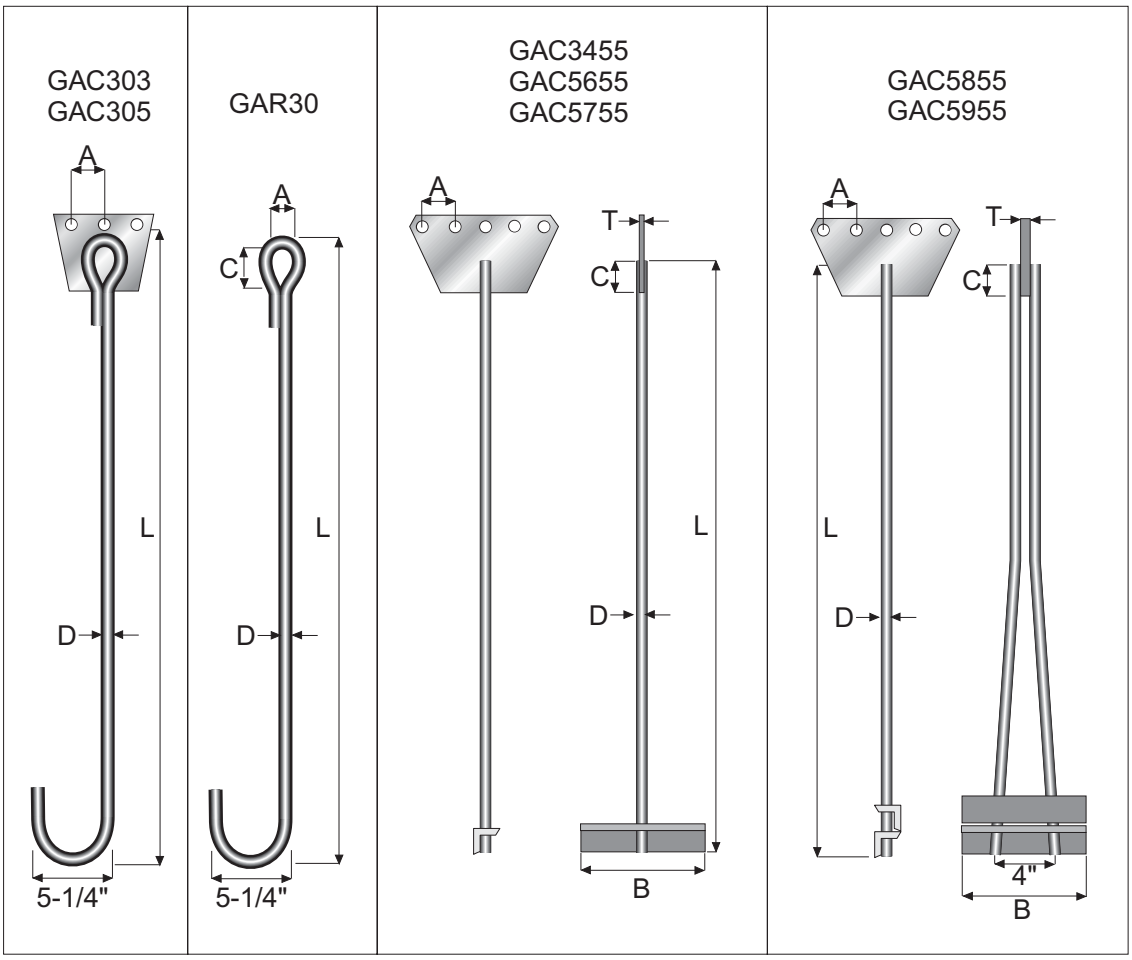

Screw Anchor - Hot Dip Galvanized

Description	Part Number	Weight
5/8" x 4' Screw Anchor (2,500 lb. holding power)	GAS604	7

GROUNDING

Ground Lugs and clamps

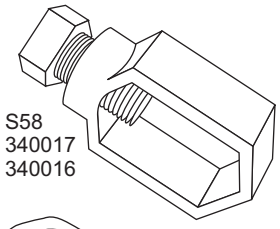

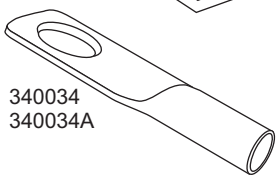

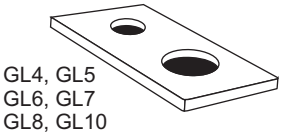

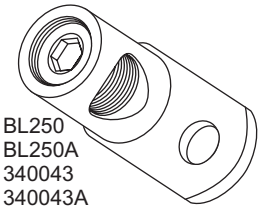

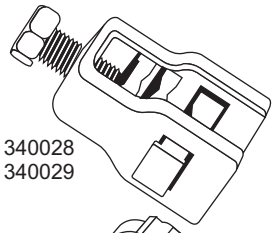

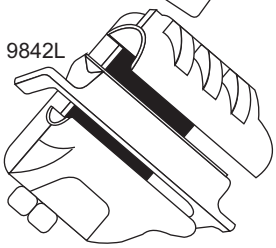

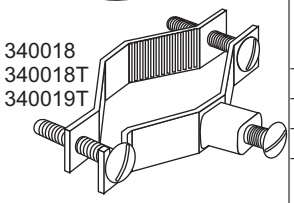

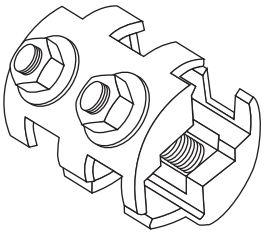

Description	Part Number	Weight
Galvanized clamp for 5/8" galvanized ground rod	S58	16/100
Bronze clamp for 5/8" copper ground rod	340017	18/100
Bronze clamp for 3/4" copper ground rod	340016	25/100
Tinned clamp for 3/4" copper ground rod	340016T	25/100
Hy-Lug, Burndy to #4 wire	340034	3/100
Hy-Lug with 3/8" bolt & nut, Burndy to #4 wire	340034A	11/100
Ground lug with 7/16 attachment hole and 1/2" bolt hole	GL4	42/100
Ground lug with 7/16 attachment hole and 5/8" bolt hole	Gl5	45/100
Ground lug with 7/16 attachment hole and 3/4" bolt hole	GL6	59/100
Ground lug with 7/16 attachment hole and 7/8" bolt hole	GL7	64/100
Ground lug with 7/16 attachment hole and 1" bolt hole	GL8	64/100
Ground lug with 7/16 attachment hole and 1-1/2" bolt hole	GL10	143/100
Ground Lug, #2 through #4/0 wire	BL250	16/100
Ground Lug with 1/4" bolt, nut, washer, #2 thru #410 wire	BL250A	20/100
Ground Lug, #14 through #4 wire	340043T	3/100
Ground Lug with 1/4" bolt, nut, washer, #14 thru #4 wire	340043A	6/100
Guy wire ground clamp (for use with 3/16 - 1/2 guy wire)I	340028	14/100
Guy wire ground clamp (for use with 9/16 - 3/4 guy wire)	340029	38/100
Guy wire ground clamp (for use with 718 - 1 guy wire)	9842L	76/100
Round member ground clamp (for 1/2" to 1" O.D.)	340018	30/100
Round member ground clamp, tinned (for 1/2" to 1" O.D.)	340018T	100/100
Round member ground clamp, tinned (for 1-1/2" to 2-3/8" O.D.)	340019T	100/100
Thompson Clamp #423T for 2/0 to 2/0	340079T	

Wire and Strap, Copper

Description	Part Number	Weight
#10 solid copper wire	CW10S	32/MFT
#6 solid copper wire	CW6S	80/MFT
#4 stranded copper wire	CW4ST	129/MFT
#4 solid copper wire	CW4S	127/MFT
#2 solid copper wire	CW2S	201 MFT
#1/0 stranded copper wire	CW1/0ST	326/MFT
#2/0 stranded copper wire	CW2/0ST	411/MFT
#4/0 stranded copper wire	CW4/0ST	653/MFT
2" x .021 copper strap	340039*	168/MFT
3" x .021 copper strap	340040*	251/MFT
4" x .021 copper strap	340041*	335/MFT
8' x 24' copper ground screen	340007*	32

*Stock levels vary. Allow sufficient time for delivery.

Ground rods and Lightning Rods

Description	Part Number	Weight
3/8" x 4' copper clad ground rod with clamp	GR384	160/100
3/8" x 4' galvanized ground rod with clamp	GR384Z	172/100
3/8" x 6' copper clad ground rod with clamp	GR386	235/100
3/8" x 6' galvanized ground rod with clamp	GR386Z	258/100
5/8" x 8' copper clad ground rod	340020	800/100
5/8" x 10' copper clad ground rod	340021	1045/100
3/4" x 10' copper clad ground rod (THD)	340024	1500/100
5/8" x 8' copper clad ground rod, plain end, with ground wire clamp	GR8C	82/100
5/8" x 8' galvanized ground rod with ground wire clamp	GR8G	90/100
3/4" x 10' copper clad ground rod (THD) w/ ground wire clamp	GR10C	133/100
3/4" ground rod coupler	3/4C	80/100
7/8" x 6' solid aluminum lightning rod	LR	6
5/8" x 5' copper clad lightning rod	LRCL	4

LIGHTING

Beacons and Lenses

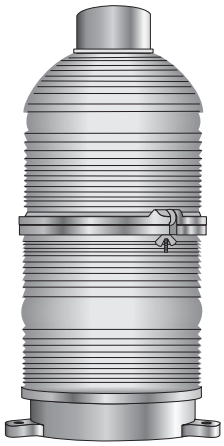

Description	Part Number	Weight
Beacon (red glass)	B1R	77
Upper Beacon Lens, red	AP3557	6
Center Beacon Lens, red	AP3556	14
Lower Beacon Lens, red	AP3555	11
Two lower red beacon lenses - glued	AP3555/5	22
One upper red beacon lens & one center red beacon lens - glued	AP3556/7	20
Clear Glass Silicon Sealant (glue)	550020	3 oz.

Ice Shields and Beacon Mounts

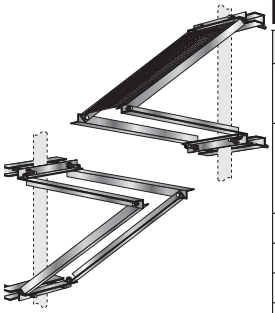

Description	Part Number	Weight
Heavy Duty Ice Shield for beacon. Framework construction with heavy grating attaches to tower leg above beacon.	ISBEACON	43
Beacon Leg Mount for sections not listed below	APL1258UM	31
Beacon Leg Mount for 1W or 2W tower section	APL1W2WA	26
Beacon Leg Mount for 3WN tower section	APL3WNA	26
Beacon top mounting plate for 4 inch flange plate	APL4A	14
Beacon top mounting plate for 4.5 inch flange plate	APL4HA	17
Beacon top mounting plate for 5 inch flange plate	APL5A	18
Beacon top mounting plate for 6 inch flange plate	APL6A	20
Beacon top mounting plate for 7 inch flange plate	APL7A	24

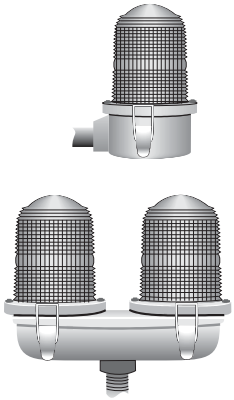

Obstruction Lights

Description	Part Number	Weight
Obstruction Light, Single (red)	OB1	4
Obstruction Light, Double (red)	OB2	8
Obstruction Light Red Lens	530230	2

Lamps

Description	Part Number	Weight
Beacon Lamp (3,000 hour) - 120 volt	B620W	2/24
Obstruction Light Lamp (8,000 hour) - 120 volt	OB116W	12/120
Obstruction Light Lamp (2,000 hour) - 230 volt	OB100W	12/120

Color Screen

Description	Part Number	Weight
Color Screen (red)	711130	4

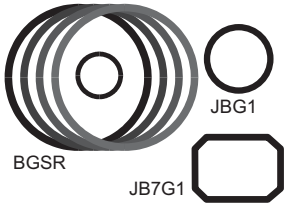

Gaskets

Description	Part Number	Weight
Set of Beacon Gaskets, consists of: 2 BGB1, 1 BGMI, 1 BGT1, and BGT2	BGSR	1
JB4 Junction Box Gasket	JBG1	1/4
JB7 Junction Box Gasket	JB7G1	1/4
Obstruction Lens Gaskets	OBG1	1/4

Breathers

Description	Part Number	Weight
Conduit Breather	CB1	1/2

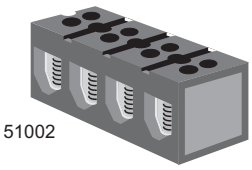

Terminal Blocks

Description	Part Number	Weight
Terminal Block, 7 position	510003	37/100
Terminal Block, 4 position	510002	21/100
Terminal Block, 2 position	510001	11/100

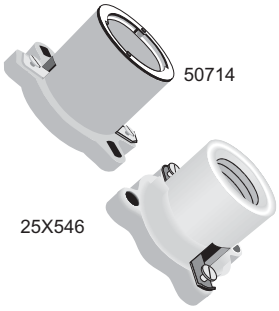

Receptacles

Description	Part Number	Weight
Beacon Lamp Receptacle, pre-focused mogulbase	23X546	1
OB Lamp Receptacle	50714	1/2

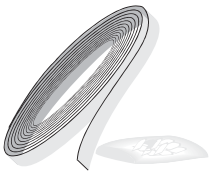

Wraplock

Description	Part Number	Weight
Wraplock 1/2" x 100' stainless steel	WR100	3

Includes metal strapping, connectors and crimping tool

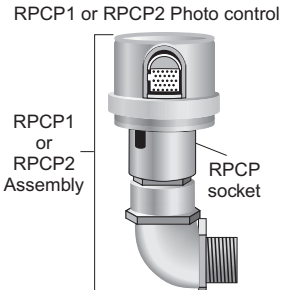

Photo Control

Description	Part Number	Weight
Photocontrol with socket, 120 volt, suitable for outdoor use	RPH1P	4
Photocontrol with socket, 230 volt, suitable for outdoor use	RPH2P	4
Photocontrol only, 120 volt, less socket	RPCP1	.19
Photocontrol only, 230 volt, less socket	RPCP2	.19
Socket for RPCPI and RPCP2	RPCPS	.55

RPH1P and RPH2P are complete assemblies, including locknuts, elbow and reducer required to connect to junction box.

Grounding Kits

See drawings shown below for configurations. Note that towers and guy configuration shown are for general examples only and may not duplicate all possible installations.

Not all towers listed are current models.
Models 36 and 48 and D are discontinued.

AGK requires one guy wire ground clamp for each guy wire. These clamps are not included in kit, and must be ordered separately

Description	Part Number	Weight
Base grounding kit consisting of: one 5/8" x 8' hot dip galvanized ground rod one brass tower attachment lug with hardware one brass rod clamp ten feet of #4 solid copper wire		
For 80, 90 and C towers	BGK1G	11
For J, 55G and 65G towers	BGK2G	11
For 25G, 26KD and 45G towers	BGK3G	11
For 1/2 inch anchor bolts	BGK4G	11
For 5/8 inch anchor bolts	BGK5G	11
For 3/4 inch anchor bolts	BGK6G	11
For 7/8 inch anchor bolts	BGK7G	12
For 1 inch anchor bolts	BGK8G	12
Anchor wire grounding kit for 3 anchors consisting of: three 5/8" x 8' hot dip galvanized ground rods three brass rod clamps 45 feet of #6 stranded copper wire *Note: Requires nine guy wire ground clamps - not included*	AGK1G	33

BGK

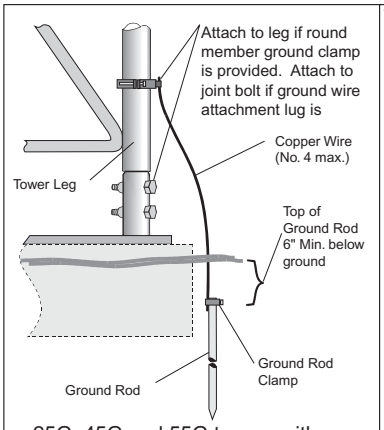

25G, 45G and 55G towers with flat base

BGK

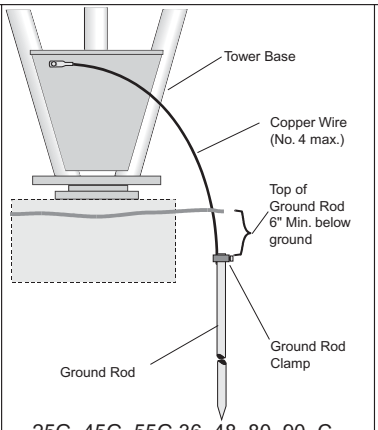

25G, 45G, 55G 36, 48, 80, 90, C and D towers with flat base

BGK

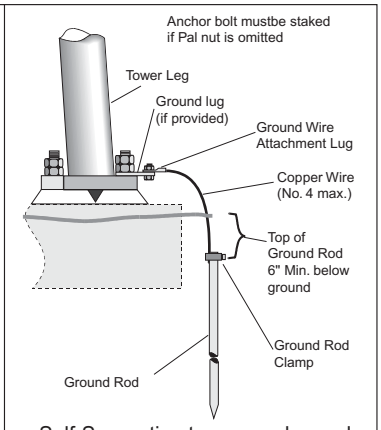

Self-Supporting towers and guyed towers with anchor bolts

AGK requires one guy wire ground clamp for each guy wire. Clamps are not included in kit, and must be ordered separately based on guy wire size.

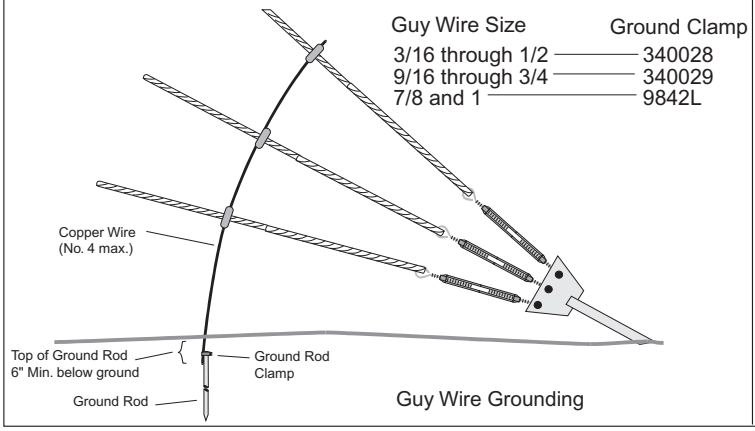

Guy Wire Grounding

AGK

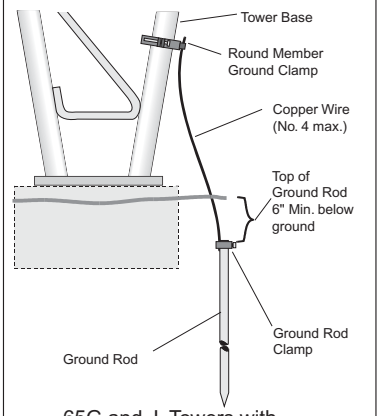

65G and J Towers with tapered base

BGK

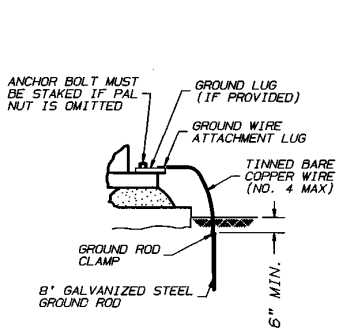

APPLICATION

SELF-SUPPORTING TOWERS AND GUYED TOWERS WITH ANCHOR BOLTS

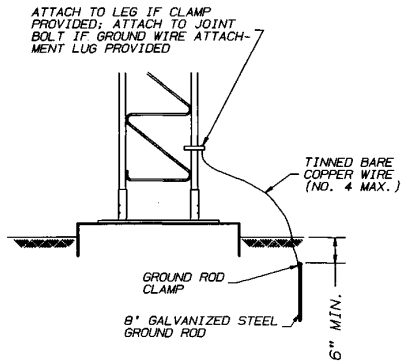

APPLICATION

NO. 25, 45 & 55 TOWERS WITH FLAT BASE

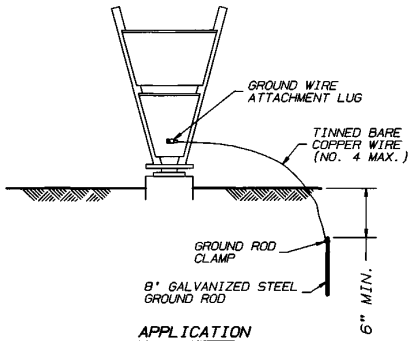

APPLICATION

NO. 25, 45, 55, 36, 48, 80, 90, CC & DD TOWERS WITH TAPERED BASE

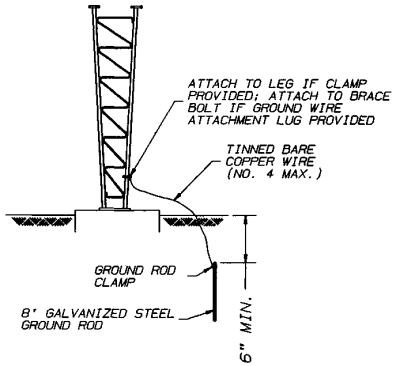

APPLICATION

NO. 65 & JJ TOWERS WITH TAPERED BASE

BASE GROUNDING KITS (BGK & BGKE)

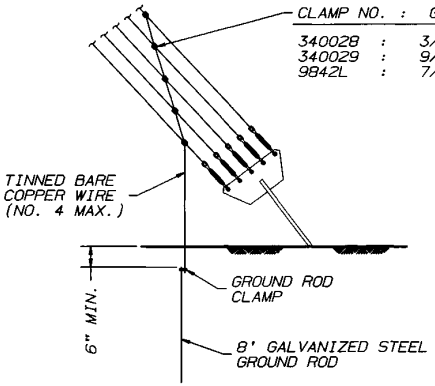

CLAMP NO.	:	GUY WIRE SIZE ✦
340028	:	3/16" - 1/2"
340029	:	9/16" - 3/4"
9842L	:	7/8" - 1" (SEE INSTALL. DETAIL B801367)

✦ NOT INCLUDED IN GROUNDING KIT. MUST BE ORDERED AS A SEPARATE ITEM.

GUY WIRE GROUNDING (AGK & AGKE)

ANCHOR GROUNDING KITS

GENERAL NOTES

1. USE SUFFICIENT BEND RADIUS TO PREVENT KINKING OF THE GROUND WIRE.
2. CUT WIRE TO PROPER LENGTHS. DO NOT COIL GROUND WIRE.

No.	Revision Description	Date	Rev. By	Ckd By	Appd By
R5	RV. PER ANSI/TIA/EIA-222-F	1-2-96	JDM	WDU	HA

ROHN

Scale: NONE	By	Date
Drawn:	JER	11-20-73
Checked:	WDU	11-27-73
App. Eng.:	CW	11-27-73
App. Sales:	MF	12-7-73

Title: TOWER GROUNDING METHODS

ENG. FILE:

DRAWING NO.: C731105 R5

Blank

ROHN™ Products

Installation Accessories

Products for a Growing World of Technology

Blank

MISCELLANEOUS

ROHN-Loc Harness

Description	Part Number	Weight
ROHN-LOC belt and safety clamp (Includes lanyard, 3 D-rings, and pouch):		
X-Small (waist size 32-40)	RLBELTXS	7.5
Small (waist size 32-40)	RLBELTS	7.5
Medium (waist size 36-44)	RLBELTM	7.5
Large (waist size 40-48)	RLBELTL	7.5
X-large (waist size 46-54)	RLBELTXL	8.0

Belts

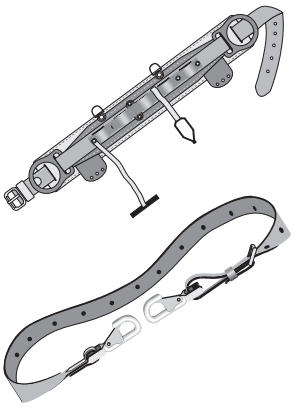

Description	Part Number	Weight
Tool and safety belt, 6 ply nylon:		
20" - see sizing instructions below	ETTSBS	4.75
22" - see sizing instructions below	ETTSBM	4.75
24" - see sizing instructions below	ETTSBL	4.75
To determine correct size measure across back, hip to hip, add 2".		
.		
Safety belt, nylon w/2 D rings & nylon lanyard (no tool capacity):		
Small (not illustrated)	ETNSBS	1.2
Medium (not illustrated)	ETNSBM	1.2
Large (not illustrated)	ETNSBL	1.2

Safety Strap

Description	Part Number	Weight
Safety Strap, nylon filament, neoprene impregnated	ETSTRAP	3

Bucket

Description	Part Number	Weight
Bucket, 17" high, No. 1 canvas with cycolac top ring (reinforced leather bottom)	ETCBKT	3

Bolt Bag

Description	Part Number	Weight
Bolt bag, belt, 10"x 11" water repellent canvas	ETBAG	.4

Hard Hat

Description	Part Number	Weight
Hard hat, adjustable	ETHH	1

Gloves

Description	Part Number	Weight
Gloves, leather, shirred elastic wrist	ETLG	1

Cables and Winches

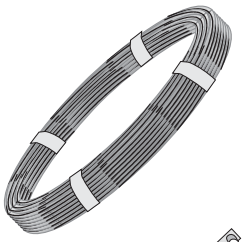

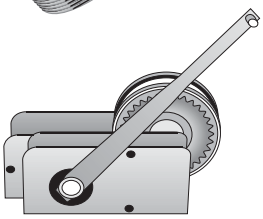

Description	Part Number	Weight
3/8" stainless steel aircraft cable 1x7		
15,000 lbs ultimate strength	RLCSS	30/CFT
1/4" galvanized aircraft cable 7x19		
7,000 lbs. ultimate strength	1/4GAC	11/CFT
Brake winch, 2,500 lb. lifting capacity		
Other winches listed in Erection Tool section	B2503	16

Toolbox

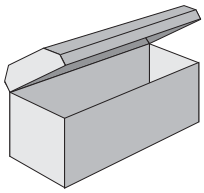

Description	Part Number	Weight
Tool box, 22"x10"x10" (approximate size)	ETTBL	5

Beam Clamp

Description	Part Number	Weight
3/8" beam clamp	BC38	30/100
1/2" beam clamp	BC12	40/100

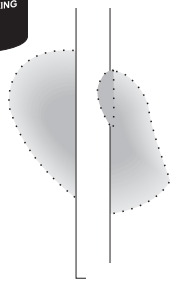

Paints and Supplies

Description	Part Number	Weight
Tower paint, orange, acrylic latex	PNTNP05	11/GAL
Tower paint, white, acrylic latex	PNTNPW9	11/GAL
Cold Galvanize, spray	380063	1
Cold Galvanize, quart can	380065	6/QT.
Paint mitt, with thumb	ETPM	.25

ROHN NO PRIME WATER BASE TOWER PAINT
for use on untreated galvanized surfaces

Cut Your Installation Costs

Tower White and Tower Orange are protective coatings formulated with a vinyl/acrylic emulsion resin providing long-term protection and performance. These coatings offer excellent resistance to weathering, ease of application and freedom from fire hazard. Meets FAA regulations for color coding transmission towers. Federal Standard No. 595 Colors, 12197 and 17875.

Preparation

Galvanized Surfaces: It is not necessary to etch or weather new galvanized surfaces. Remove all deteriorated coatings by scraping or wirebrushing. Remove grease, oil, salt, white rust, or dirt by washing with a suitable detergent solution. No primer necessary except where galvanizing has been damaged, then spot prime with zinc dust primer.

Application

These products are formulated specifically for application to galvanized steel towers by paint mittens, air atomized spray or airless spray. May be applied as a one coat system. However, to assure maximum color uniformity and hiding, application of an additional coat may be desired. Will also perform well over uncoated galvanized metal surfaces and wood.

Clean Up With Soap and Water

Physical Characteristics	
Type Vehicle	Blended Vinyl Acrylic Emulsion
Type Solvent	Water
Flash Point	Non-Flammable
Contains No Lead	
Heat Resistance	180° F, 82° C
Finish	Flat
Drying Time at 70° F (21°C) and 50% Relative Humidity	
Touch	1 hour
Recoat	2-4 hours
Hard	3-4 weeks
Coverage	200-400 Square feet per gallon at the recommended dry film thickness of 1-2 mils.

Order PNTNP05 (orange) or PNTNPW9 (white) 11#/gallon

March 15, 1992

ROHN Tower Field Treating & Painting Specifications

All instruments of authorization for tower licensing, wherever antenna structures must be painted, clearly outline the manner in which such structures are to be marked. Under no circumstances is there to be any deviation, as F.C.C.'s Field Engineering & Monitoring Bureau has a tight inspection schedule and could issue violation notices to licensees who have not complied.

The pertinent rule section to be observed is:

Antenna structures shall be painted throughout their height with alternate bands of aviation surface orange and white, terminating with aviation surface orange bands at both top and bottom. The width of the bands shall be approximately one-seventh the height of the structure; however, the bands shall not be more than 100 feet nor less than 1-1/2 feet in width. All towers shall be cleaned or repainted as often as necessary to maintain good visibility.

Suggested procedures for treating and painting towers in the field are:

1. **Treating Galvanized Surfaces for Oil Based Paints:**

   Prior to painting, the surface of all tower parts shall be treated by applying with a brush a chemical solution containing the following:

   2 ounces each – Copper Chloride/Copper Nitrate/Sal Ammoniac, available from ROHN in one package (ROHN Part Number T1)

   2 ounces Muriatic Acid, obtain locally (Note: Muriatic Acid is extremely dangerous and should be treated carefully. Wear protective clothing, i.e. gloves, face masks/shields, glasses, etc. Follow the instructions on the container. ROHN takes no responsibility for improper use of Muriatic Acid).

   1 gallon water

2. The treated surfaces shall again be washed with plain water and allowed to completely dry before applying any paint.

3. **Applying Paint:**

   All surfaces of all parts of the tower, including any exposed steel of the anchors, turnbuckles and cable clamps, shall be painted, except the guy wires and accessories, such as antennas, ladders, bottom of flanges, lights and cables. All bolts and nuts, which have not been painted during assembly shall be painted after erecting.

   The paint shall be applied by brushing or spraying, depending on conditions or the erector's option. All surfaces shall be uniformly covered, with no streaks or incompletely covered surfaces permitted.

   Before painting, all surfaces shall be clean and free from all foreign matter. All painting shall be done in dry weather for best results. Paint shall not be applied on wet surfaces, nor when the relative humidity exceeds 80%, or when the temperature of the surrounding air or the surface to be painted is 50° F or below.

   Steel shall not be handled until paint is thoroughly dry. After erection, the tower paint shall be carefully touched up, assuring proper coverage of all areas to be painted.

Wrenches

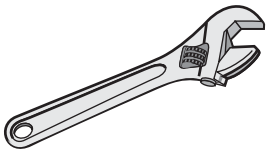

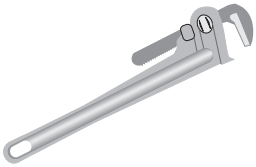

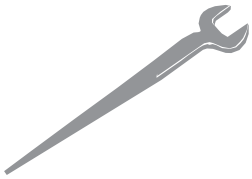

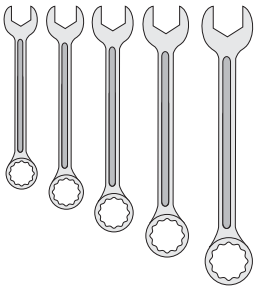

Description			Part Number	Weight
Adjustable wrench, drop forged alloy steel, heat treated:				
10"			ETCRTW10	1
12"			ETCRTW12	1.5
18"			ETCRTW18	5.5
Straight pipe wrench, malleable iron I-beam handle:				
10"			ETHDPWl0	3
12"			ETHDPWl2	4
Construction wrench with drifting and aligning handle:				
Bolt Size	Opening	Length		
1/2"	7/8"	12"	ETCTW7/8	1
5/8"	1-1/16"	14-3/4"	ETCTW11/16	1.75
3/4"	1-1/4"	17"	ETCTW11/4	2
7/8"	1-7/16"	17-5/16"	ETCTW17/16	2.75
1"	1-5/8"	17-11/16"	ETCTW15/8	3.75
Combination wrench set:				
1/2", 9/16", 5/8", 3/4", 7/8" openings, 5 pieces			ETCWSET	120/100

Pliers and Grips

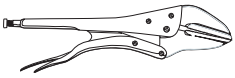

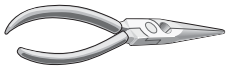

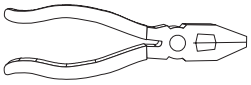

Description			Part Number	Weight
Locking plier/wrench, 10" straight jaws			ETLPW10	1.5
Thin nose pliers, 6"			ETTNP	.25
Side Cutters, 8" forged steel with polished steel finish			ETSC8	1
Channelock pliers, 12", forged, polished steel finish			ETCHP12	1.75
Cable grips:				
Maximum	Minimum	Maximum		
Cable Size	Cable Size	Safe Load		
.37"	.12"	4,500 lbs.	ETCG37	3
.75"	.37"	10,000 lbs.	ETCG75	4
1.00"	.75"	15,000 lbs.	ETCGl00	17

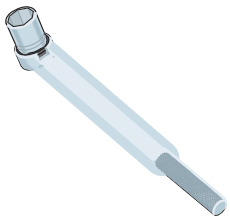

Rachets, Sockets and Socket Adapters

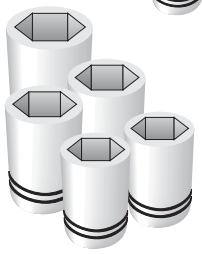

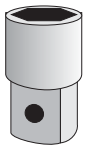

Description	Part Number	Weight
Reversible ratchet handles:		
3/8" drive, 7" handle	ETRRH738	70/100
1/2" drive, 10" handle	ETRRH1012	150/100
1/2" drive, 15" handle	ETRRH1512	320/100
3/4" drive, 19" handle	ETRRH1934	500/100
Sockets:		
3/8" Drive, deep set		
7/16"	ETDS7/1638	11/100
1/2"	ETDS1/238	10/100
9/16"	ETOS9/1638	16/100
5/8"	ETDS5/838	20/100
11/16	ETDS11/1638	22/100
3/4"	ETDS3/438	28/100
13/16"	ETDS13/1638	30/100
7/8"	ETDS7/838	37/100
1/2" Drive, deep set		
7/16"	ETDS7/1612	23/100
1/2"	ETDS1/212	29/100
9/16"	ETDS9/1612	29/100
11/16"	ETDS11/1612	30/100
13/16"	ETDS13/1612	44/100
7/8"	ETDS7/812	51/100
15/16"	ETOS15/1612	58/100
1-1/16"	ETDS1&1/1612	80/100
1-1/8"	ETDS11/812	81/100
3/4" Drive, deep set		
1-1/4"	ETDS11/434	118/100
1-5/16"	ETDS15/1634	123/100
1-7/16"	ETDS17/1634	140/100
1-1/2"	ETDS11/234	174/100
1-5/8"	ETDS15/834	212/100
Socket Adapters:		
To convert 3/8" to 1/2"	ETSADAP38/122	13/100
To convert 1/2" to 3/8"	ETSADAP12/38	15/100
To convert 1/2" to 3/4"	ETSADAP12/34	31/100
To convert 3/4" to 1/2"	ETSADAP34/12	44/100

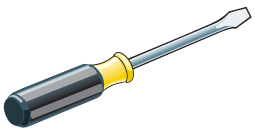

Screwdrivers

Description	Part Number	Weight
Light blade, cabinet tip, 6" blade, 3/16" diameter, 9-1/16" length	ETSD3/16	15/100
Square blade, standard tip, 6" blade, 5/16" diameter, 10" length	ETSD5/16	30/100

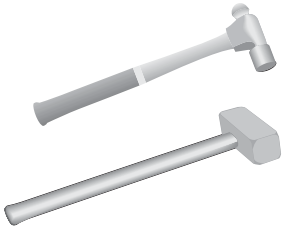

Hammers

Description	Part Number	Weight
Ball pien hammer, 40 oz., 16" length, hickory handle	ETHAM40	3
Sledge hammer double face, 8 lbs. 32" handle 2-1/4" face	ETDFS8	8

Cutting and Stripping Tools

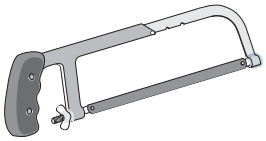

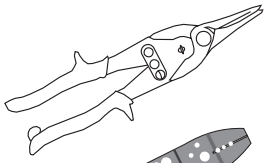

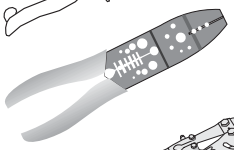

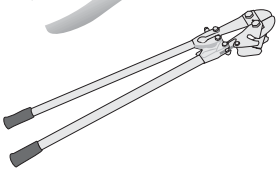

Description	Part Number	Weight
Hack saw, adjusts for 8" to 12" blades (10" provided),		
3-1/4" depth of cut	ETHS10	1.6
Hack saw blades, set of ten 10" blades	ETHSB10	.4
Tin snips, drop-forged steel with polished jaws	ETTS10	1
Wire strippers, 7-1/2", cuts bolts & wire, strips wire, measures, gauges wire	ETWS1000	.5
Bolt/center cutters, cuts galvanized strand guy wire up to 1/2"	ETCCC1/2	18.75

Dynamometers and Transits

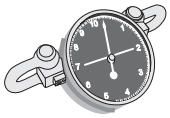

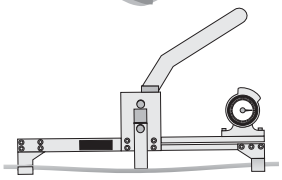

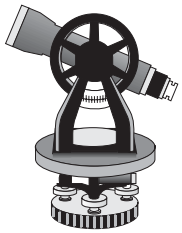

Description	Part Number	Weight
Dial type, 10,000 lb. capacity, 100 lb. increments	ETDYNDE	16
Dial type, 5,000 kg. capacity, 50 kg. increments	ETDYNDM	16
Shunt type, for 5/16" to 3/4" guy strand	ETDYNS750	4
Same as above with ET750SAD saddle	ETDYNS750A	4
Saddle for measuring less than 5/16" guy strand, use with ETDYNS750	ET750SAD	.33
Universal transit with compass and tripod	ETUT	25
Transit only	ETTRANSIT	10
Tripod only	ETTRIPOD	15

Measuring Tools

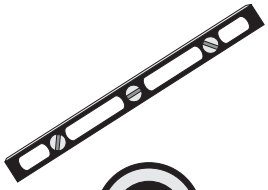

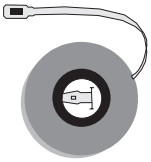

Description	Part Number	Weight
Level, 3 position, 4' length, one piece magnesium, I-beam construction	ETL4	2
Protractor plumb and level, for installing guy anchors at proper slope	ETGAL	.4
Steel tape, 50' or 15 meters, metric and English	ETST15M/50	.8

Punches and Pins

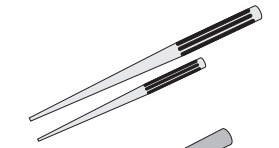

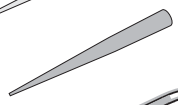

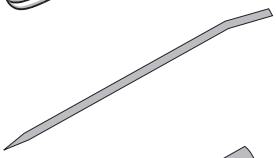

Description	Part Number	Weight
Lining up punch, hexagon, 3/16" point, 1/2" stock,I0" length	ETLUP3/I6	.5
Lining up punch, hexagon, 1/4" point, 3/4" stock, 15" length	ETLUPI/4	1
Bull pin, 15" long	ETBP3/8	2.25
Serving tool	CST1	3
Pinch bar, 5'	ETPB30	7

Files and Rasps

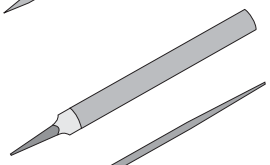

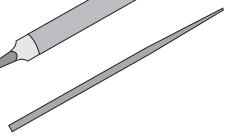

Description	Part Number	Weight
File, rasp, half round	ETFILE	.4
File, 1/2" diameter round, 12" long	ETFILER	.33

Beacons and Lenses

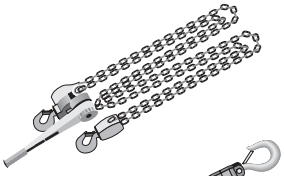

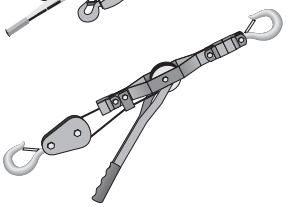

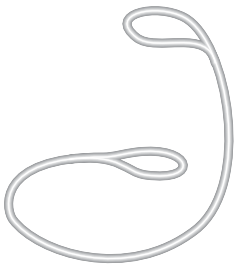

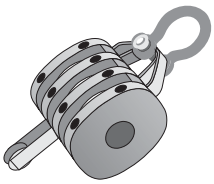

Description	Part Number	Weight
Chain hoist,		
heavy duty 6,000 lb., maximum lift 10', with hook latches	ETHDCH	45
Cable hoist,		
light duty 2 ton capacity, maximum lift 6', 3/16" aircraft type cable	ETLDCH	9
Hand winch,		
heavy duty, 2,000 lb. capacity, 735' 1/8" cable drum cap.	ETHW2000	
heavy duty, 4,000 lb. capacity, 460' 1/4" cable drum cap.	ETHW4000	
Choker sling, cable braided eye & eye		
3', 3/8", max. strength. 1,600 lbs.	ETCS3/8X3	1.8
6', 3/8", max. strength. 1,600 lbs.	ETCS3/8X6	2
15',3/8", max. strength. 1,600 lbs.	ETCS3/8XI5	5
30', 3/8", max. strength. 1,600 lbs.	ETCS3/8X30	8.8
3', 1/2", max. strength. 2,800 lbs.	ETCS1/2X3	2.4
6', 1/2", max. strength. 2,800 lbs.	ETCS1/2X6	4.8
15,1/2", max. strength. 2,800 lbs.	ETCS1/2XI5	12
30', 1/2", max. strength. 2,800 lbs.	ETCS1/2X30	24
Snatch block, 8,000 lb. safe working load, with hook	ETSB18HHD	6
Snatch block, 8,000 lb. safe working load, with shackle	ETSB19SHD	6
5" Wood block, 2 pant with shackle, 1,800 lb. safe load	ETWB2	4.8
5" Wood block, 3 part with shackle, 2,400 lb. safe load	ETWB3	6.5

Chain, Rope and Cable

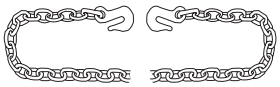

Description	Part Number	Weight
Chain, 1/2" with 2 clevis hooks, 10' long	ETCHN1/2	10
Manila rope, 3 strand, lubricated 3/8", tensile strength 1,220 lbs.		
600' coil	ETMR3/8X600	24
1,200' coil	ETMR3/8X1200	48
1/2", tensile strength 2,830 lbs.		
600' coil	ETMRI/2X600	44
1,200' coil	ETMRI/2X1200	88
5/8", tensile strength 3.960 lbs		
600' coil	ETMR5/8X600	79
1,200' coil	ETMR5/8X1200	157
Polypropolene rope 3/8", tensile strength 2,440 lbs.		
600' coil	ETPR3/8X600.	23
1,200' coil	ETPR3/8X1200	46
1/2", tensile strength 3780 lbs.		
600' coil	ETPR1/2X600	42
1,200' coil	ETPR1/2X1200	84
5/8", tensile strength 5,670 lbs.		
600' coil	ETPR5/8X600	50
1,200' coil	ETPR5/8x1200	100
Winch cable		
1/8", 2,000 lb. breaking strength	ETWC18	.06/FF
1/4", 5,880 lb. breaking strength	ETWC14	.12/FF
3/8,13, 120 lb. breaking strength	ETWC38	.25/FF

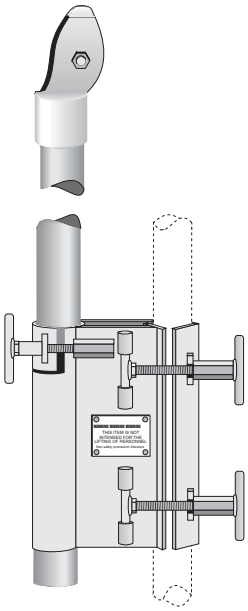

Erection Fixtures

Description	Part Number	Weight
12' for towers with 1-1/4" tubular side rails	EF2545	20

Important: Erection fixtures should only be used to raise one section, or any part of a section, at one time. They are not intended for the lifting of people.

ROHN™ Products

Waveguide Bridges & Ladders

Products for a Growing World of Technology

Blank

HORIZONTAL WAVEGUIDE BRIDGE

ROHN's Horizontal Waveguide Bridge comes complete in 10 ft. lengths in 24" or 48" widths. This Waveguide Bridge is completely self-supporting and includes 3 levels of 'trapeze'. This allows the transmission line to hang below the grating protection for safety against hazards such as falling ice. All items are hot dip galvanized. The threaded rod for the trapeze hanger angle can also be ordered as stainless steel.

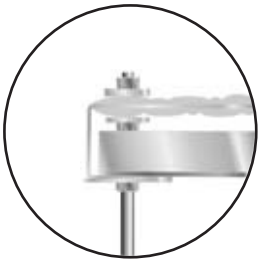

Detail 1

Part Number	Description
WGBS2410	Horizontal Waveguide Bridge, 24 inches wide by 10 feet long
WGBD2410	Horizontal Waveguide Bridge, 48 inches wide by 10 feet long

Detail 2

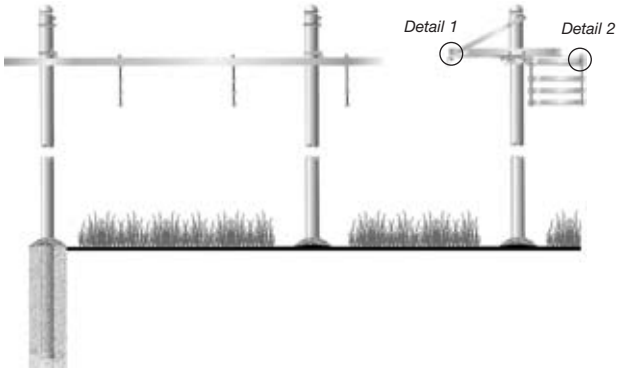

WAVEGUIDE SUPPORT

Waveguide Ladder Assembly

ROHN Waveguide Ladder assemblies come in 10 ft. or 20 ft. sections with pre-punched rungs in two variations, 8 or 15 holes, with both 7/16” diameter holes to accommodate butterfly hangers and 3/4” diameter holes to accept snap-in hangers. These ladders can be ordered with either 3 ft. or 4 ft. rung spacing. The 8 hole ladder is 19-1/6” wide and the 15 hole ladder is 34-13/16” wide. Mounting clamp assemblies must be ordered separately based upon brace size to which it is to be attached. All items are hot dip galvanized.

Special instructions on ordering Waveguide Ladders and Clamps

Waveguide ladder mounting clamp assemblies are included as part of the Waveguide Ladder but must be specified/ordered separately based upon brace size. See lower table on this page for part numbers and descriptions. Note there are tables for round and angle braces.

Part Number	Description
WL20F154KD	Waveguide Ladder, 20 foot section, 15 hole rungs with 4 foot spacing
WL10F154KD	Waveguide Ladder, 10 foot section, 15 hole rungs with 4 foot spacing
WL20F84KD	Waveguide Ladder, 20 foot section, 8 hole rungs with 4 foot spacing
WL10F84KD	Waveguide Ladder, 10 foot section, 8 hole rungs with 4 foot spacing
WL20F153KD	Waveguide Ladder, 20 foot section, 15 hole rungs with 3 foot spacing
WL10F153KD	Waveguide Ladder, 10 foot section, 15 hole rungs with 3 foot spacing
WL20F83KD	Waveguide Ladder, 20 foot section, 8 hole rungs with 3 foot spacing
WL10F83KD	Waveguide Ladder, 10 foot section, 8 hole rungs with 3 foot spacing

ROHN™ Products

Fall Protection

Products for a Growing World of Technology

Fall Protection

ROHN - The Only Source You'll Need

ROHN, in addition to making the highest quality towers, poles, equipment enclosures and mounts, also offers all the hardware and accessories you need to complete the package. From safety harnesses to steel tubing and masts, we've got what you need. All with the same high quality and engineering you'd expect from ROHN.

ROHN - Loc Safety Climbing Device

When you install a ROHN -Loc you're protecting your workers as well as yourself. With ROHN -Loc you can overcome one of the biggest obstacles facing workers today, the reluctance to use complicated or bulky safety devices. ROHN -Loc is designed for permanent installation on a ladder or step-bolt equipped structure of any kind. It requires no complex assembly or complicated procedures for ordinary use. The convenience of ROHN -Loc is one of its strongest features, because a safety device does no good if workers won't use it.

The ROHN -Loc system uses top and bottom brackets which secure a 3/8" cable. The ROHN-Loc safety clamp is permanently attached to the harness. The safety clamp locks to the cable allowing the worker to climb the structure with the clamp sliding freely along the cable and automatically past the safety cable restraints.

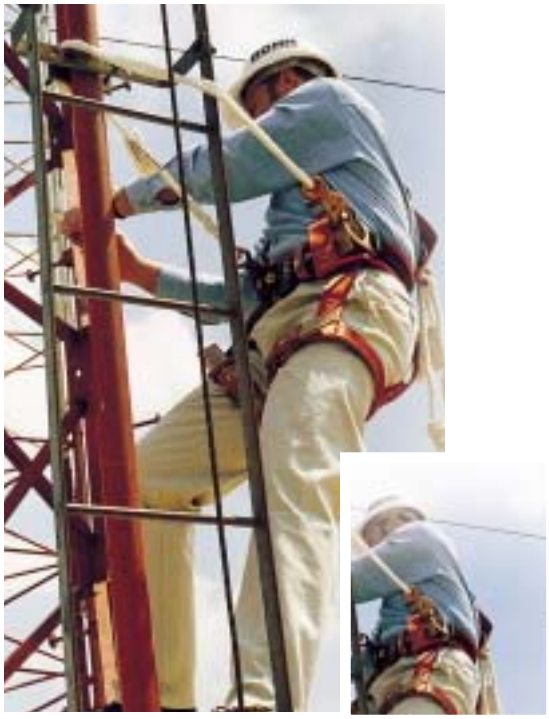

The cable is kept parallel to the structure along the entire length with cable restraints designed to keep the cable rigid, even in high winds. The ROHN -Loc Safety Harness and Safety Clamp securely lock onto the cable and the worker is secured to the structure.

Because of the unique design of the ROHN -Loc Safety Clamp, it is able to automatically slide past the intermediate cable restraints without any special effort or fumbling with latches or levers, leaving both hands free for safe climbing.

The top safety cable bracket can also serve as a climbing extension with permanently attached hand grips for workers to use in moving onto a platform or away from the ladder itself.

Additional Features Of the ROHN-Loc Safety Harness and Safety Clamp

- Made of 1 3/4" (44mm) nylon webbing lined with Ultra-Hyde all wear points for reinforcement and comfort
- Drop-forged tongue buckles with rollers and grommeted holes on waist and leg straps allowing a wide range of adjustments
- Quickly adjustable shoulder straps fasten with single-pass friction buckles
- Features a drop-forged circle D-ring at the back with adjustable nylonlanyard provided as a fall-arrest device
- Has an integral waist belt with D-rings which permits the harness to be used for positioning
- Stainless steel positive gripping clamp with special lock to ensure secure attachment to safety cable
- Unique double lock system allows worker to release unit with one hand at any elevation plus prevents accidental disconnection

ROHN

Safety Cable
3/8″ galvanized steel cable held rigid against ice and wind by cable restraints. Stainless steel cable also available.

Optional Top Safety Cable Bracket
Hot Dip Galvanized steel with step bolts to serve as climbing extension.

Bottom Safety Cable Bracket
Hot Dip Galvanized formed steel with multiple bolt holes for adaptable installation.

Safety Cable Bracket...

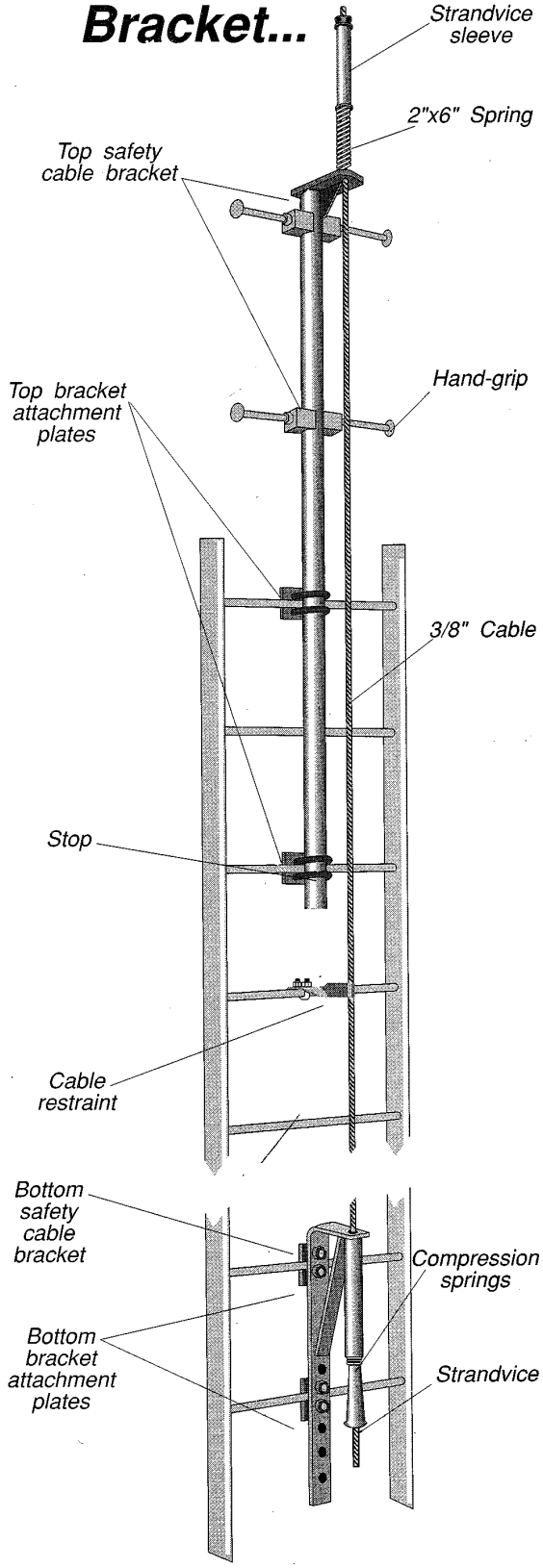

ROHN-LOC SAFETY CLIMBING DEVICES

For Use With Leg or Face Mounted Ladder
(Refer to Drawing No. C741170 for further details.)

Part Number	Number of Restrainers	Wt.	Part Number	Number of Restrainers	Wt.	Part Number	Number of Restrainers	Wt.
			RL210	10	263	RL410	20	423
RL020	0	106	RL220	10	266	RL420	20	426
RL030	1	119	RL230	11	279	RL430	21	449
RL040	1	122	RL240	11	282	RL440	21	452
RL050	2	135	RL250	12	295	RL450	22	455
RL060	2	138	RL260	12	298	RL460	22	458
RL070	3	151	RL270	13	321	RL470	23	471
RL080	3	154	RL280	13	324	RL480	23	474
RL090	4	170	RL290	14	327	RL490	24	483
RL100	4	173	RL300	14	330	RL500	24	490
RL110	5	183	RL310	15	343	RL510	25	503
RL120	5	186	RL320	15	346	RL520	25	506
RL130	6	199	RL330	16	359	RL530	26	519
RL140	6	202	RL340	16	362	RL540	26	522
RL150	7	215	RL350	17	375	RL550	27	529
RL160	7	218	RL360	17	378	RL560	27	532
RL170	8	231	RL370	18	391	RL570	28	561
RL180	8	234	RL380	18	394	RL580	28	564
RL190	9	247	RL390	19	407	RL590	29	567
RL200	9	250	RL400	19	410	RL600	29	570

Complete kits include one medium harness with safety clamp, necessary restrainers, top and bottom attachments, correct amount of 3/8" EHS cable to reach the top of the ladder, and necessary nuts, bolts, and U-bolts. For ordering the above, add suffix LAD to the appropriate kit part number. Individual part numbers for the top and bottom attachments and restrainers for use with ladder are as follows:

RLTBL ROHN-Loc Top Bracket Assembly (for use with ladder attachment)
RLBBL ROHN-Loc Bottom Bracket Assembly (for use with ladder attachment)
RLR1 ROHN-Loc Cable Restrainer (for use with ladder attachment)

If a ROHN-Loc Safety Climbing Device is to be used with a ROHN 25, 45, 55, 65, C or J per Drawing No. C741162, add suffix 25, 45, 55, 65, C or J to the appropriate kit part number. Individual part numbers for the top and bottom attachments and restrainers for use with 25, 45, 55, 65, C or J are as follows.

RLTBBB* ROHN-Loc Top & Bottom Bracket Assembly (for use with 25, 45, 55, 65, C or J tower)
RLR2 ROHN-Loc Cable Restrainer (for use with 25, 45, 55, 65, or J tower)
RLR3 ROHN-Loc Cable Restrainer (for use with C tower)

If a ROHN-Loc Safety Climbing Device is to be leg mounted on a ROHN self supporting, 80 or 90 tower per Drawing No. C741234 (for top post assembly) or per Drawing No. C741242 (for top bracket assembly), individual items (one harness with safety clamp, necessary restrainers, sufficient amount of cable to reach the top of the tower, top and bottom attachments) must be ordered from the list below:

RLFBH** Full-Body Harness with ROHN-Loc Safety Clamp
RLC (3/8 EHS)▲ ROHN-Loc 3/8" EHS Safety Cable
RLCSS▲ ROHN-Loc 3/8" Stainless Steel Safety Cable
RLTPA* ROHN-Loc Top Post Assembly (for use with step bolts)
RLTBA* ROHN-Loc Top Bracket Assembly (for use with step bolts and through 4" pipe)
RLFPA* ROHN-Loc Filler Plates (for use with tapered top or top plate)
RLCRA1 ROHN-Loc Cable Restrainer (for sections 1W through 5N)
RLCRA2 ROHN-Loc Cable Restrainer (for 4-1/2" O.D. or smaller pipe)
RLCRA3 ROHN-Loc Cable Restrainer (for 5" to 12" pipe)
RLBBA* ROHN-Loc Bottom Bracket Assembly with Cable Hardware (for use with step bolts and through 10" pipe)

*Specify tower model no. (25, 45, 55, 65, C, J) or section/pipe size.
**Specify size (waist size) – Small (32/40), Medium (36/44), Large (40/48), Extra Large (44/52)
▲ Specify Tower Height
Note: For ROHN solid leg towers or bracketry to attach ROHN-Loc to a 9-1/2" flange plate or larger, contact the factory.
Caution: The ROHN-Loc Safety Clamp must be used only on ROHN-Loc 3/8" Safety Cable. Use on any other cable is dangerous and could result in serious injury or death. ROHN recommends a complete inspection of the safety climb system if exposed to excessive stresses and will inspect it at the ROHN facility free if desired. Specifications subject to change without notice.

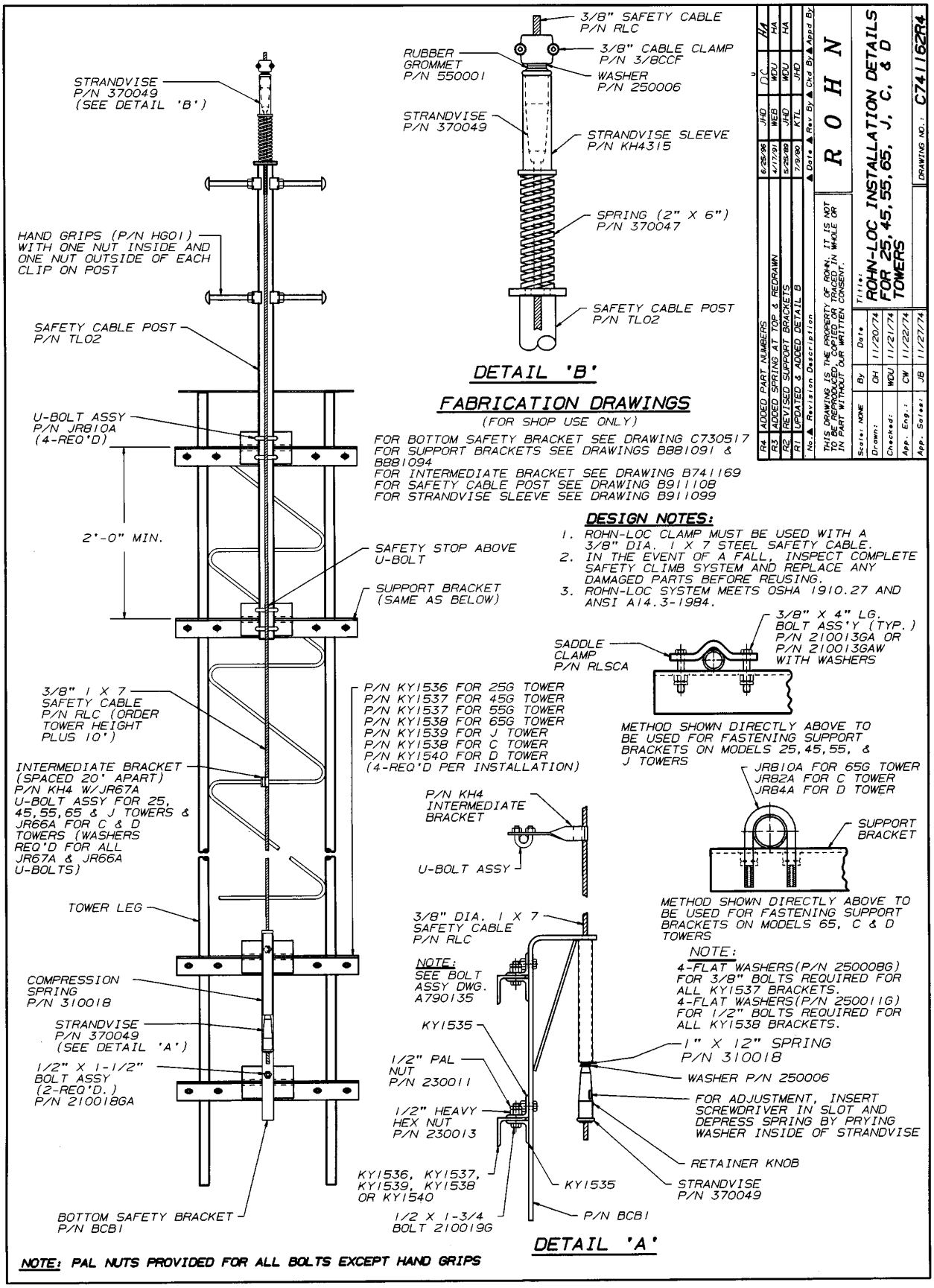
STRANDVISE P/N 370049 (SEE DETAIL 'B')
HAND GRIPS (P/N HG01) WITH ONE NUT INSIDE AND ONE NUT OUTSIDE OF EACH CLIP ON POST
SAFETY CABLE POST P/N TL02
U-BOLT ASSY P/N JR810A (4-REQ'D)
2'-0" MIN.
SAFETY STOP ABOVE U-BOLT
SUPPORT BRACKET (SAME AS BELOW)
3/8" 1 X 7 SAFETY CABLE P/N RLC (ORDER TOWER HEIGHT PLUS 10')
INTERMEDIATE BRACKET (SPACED 20' APART) P/N KH4 W/JR67A U-BOLT ASSY FOR 25, 45, 55, 65 & J TOWERS & JR66A FOR C & D TOWERS (WASHERS REQ'D FOR ALL JR67A & JR66A U-BOLTS)
TOWER LEG
COMPRESSION SPRING P/N 310018
STRANDVISE P/N 370049 (SEE DETAIL 'A')
1/2" X 1-1/2" BOLT ASSY (2-REQ'D.) P/N 210018GA
BOTTOM SAFETY BRACKET P/N BCB1
P/N KY1536 FOR 25G TOWER
P/N KY1537 FOR 45G TOWER
P/N KY1537 FOR 55G TOWER
P/N KY1538 FOR 65G TOWER
P/N KY1539 FOR J TOWER
P/N KY1538 FOR C TOWER
P/N KY1540 FOR D TOWER
(4-REQ'D PER INSTALLATION)
3/8" SAFETY CABLE P/N RLC
RUBBER GROMMET P/N 550001
3/8" CABLE CLAMP P/N 3/8CCF
WASHER P/N 250006
STRANDVISE P/N 370049
STRANDVISE SLEEVE P/N KH4315
SPRING (2" X 6") P/N 370047
SAFETY CABLE POST P/N TL02
DETAIL 'B'
FABRICATION DRAWINGS
(FOR SHOP USE ONLY)
FOR BOTTOM SAFETY BRACKET SEE DRAWING C730517
FOR SUPPORT BRACKETS SEE DRAWINGS B881091 & B881094
FOR INTERMEDIATE BRACKET SEE DRAWING B741169
FOR SAFETY CABLE POST SEE DRAWING B911108
FOR STRANDVISE SLEEVE SEE DRAWING B911099
DESIGN NOTES:
1. ROHN-LOC CLAMP MUST BE USED WITH A 3/8" DIA. 1 X 7 STEEL SAFETY CABLE.
2. IN THE EVENT OF A FALL, INSPECT COMPLETE SAFETY CLIMB SYSTEM AND REPLACE ANY DAMAGED PARTS BEFORE REUSING.
3. ROHN-LOC SYSTEM MEETS OSHA 1910.27 AND ANSI A14.3-1984.
SADDLE CLAMP P/N RLSCA
3/8" X 4" LG. BOLT ASS'Y (TYP.) P/N 210013GA OR P/N 210013GAW WITH WASHERS
METHOD SHOWN DIRECTLY ABOVE TO BE USED FOR FASTENING SUPPORT BRACKETS ON MODELS 25, 45, 55, & J TOWERS
P/N KH4 INTERMEDIATE BRACKET
U-BOLT ASSY
JR810A FOR 65G TOWER
JR82A FOR C TOWER
JR84A FOR D TOWER
SUPPORT BRACKET
METHOD SHOWN DIRECTLY ABOVE TO BE USED FOR FASTENING SUPPORT BRACKETS ON MODELS 65, C & D TOWERS
3/8" DIA. 1 X 7 SAFETY CABLE P/N RLC
NOTE: SEE BOLT ASSY DWG. A790135
NOTE:
4-FLAT WASHERS(P/N 250008G) FOR 3/8" BOLTS REQUIRED FOR ALL KY1537 BRACKETS.
4-FLAT WASHERS(P/N 250011G) FOR 1/2" BOLTS REQUIRED FOR ALL KY1538 BRACKETS.
KY1535
1" X 12" SPRING P/N 310018
1/2" PAL NUT P/N 230011
WASHER P/N 250006
FOR ADJUSTMENT, INSERT SCREWDRIVER IN SLOT AND DEPRESS SPRING BY PRYING WASHER INSIDE OF STRANDVISE
1/2" HEAVY HEX NUT P/N 230013
RETAINER KNOB
KY1536, KY1537, KY1539, KY1538 OR KY1540
KY1535
STRANDVISE P/N 370049
1/2 X 1-3/4 BOLT 210019G
P/N BCB1
DETAIL 'A'
NOTE: PAL NUTS PROVIDED FOR ALL BOLTS EXCEPT HAND GRIPS
R4 ADDED PART NUMBERS 6/25/96 JHD DC HA
R3 ADDED SPRING AT TOP & REDRAWN 4/17/91 WEB WDU HA
R2 REVISED SUPPORT BRACKETS 5/25/89 JHD WDU HA
R1 UPDATED & ADDED DETAIL B 7/9/80 KTL JHD
No. Revision Description Date Rev By Ckd By Appd By
ROHN
THIS DRAWING IS THE PROPERTY OF ROHN. IT IS NOT TO BE REPRODUCED, COPIED OR TRACED IN WHOLE OR IN PART WITHOUT OUR WRITTEN CONSENT.
Scale: NONE
Drawn: QH 11/20/74
Checked: WDU 11/21/74
App. Eng.: CW 11/22/74
App. Sales: JB 11/27/74
Title: ROHN-LOC INSTALLATION DETAILS FOR 25, 45, 55, 65, J, C, & D TOWERS
DRAWING NO.: C741162R4

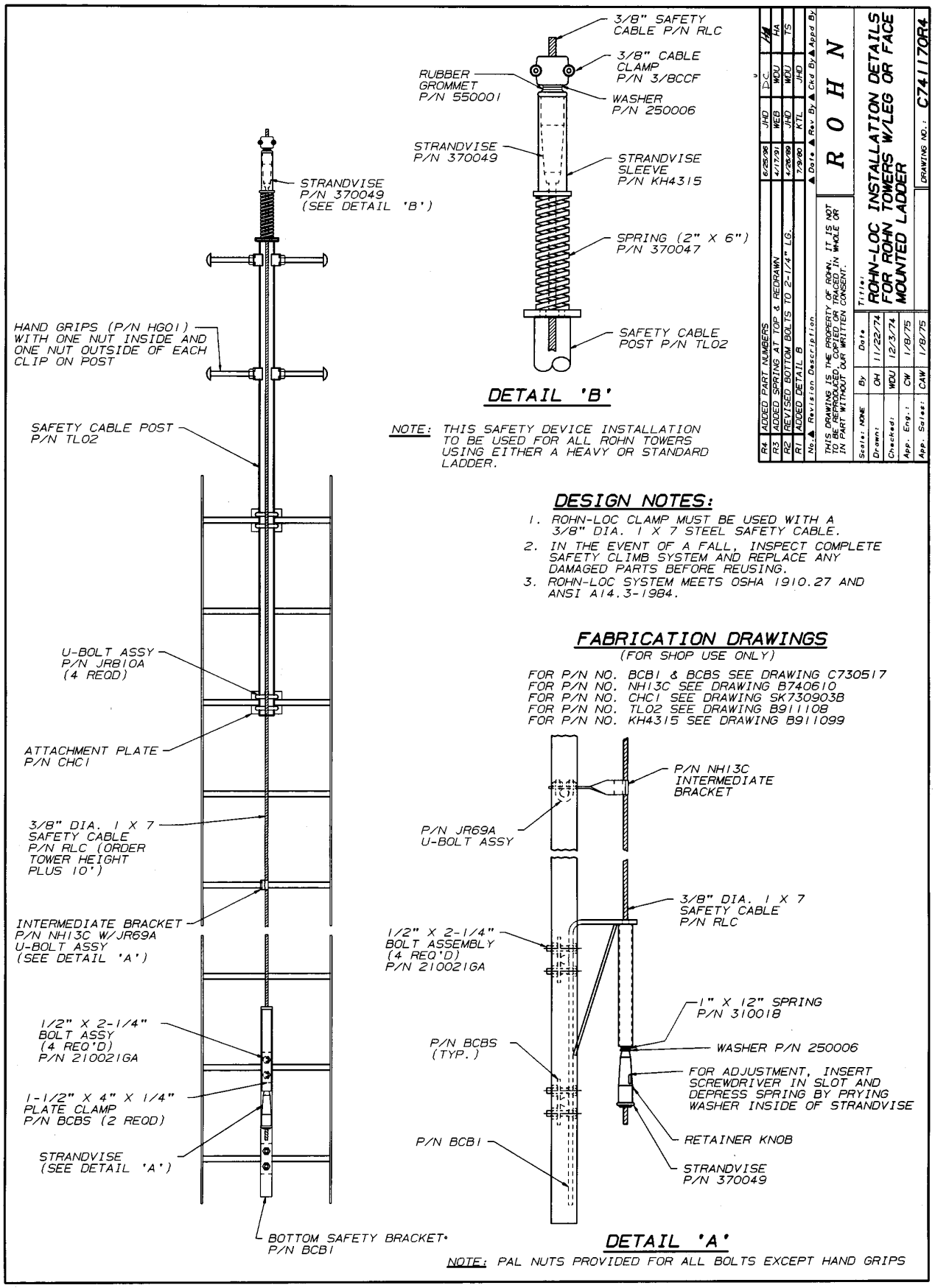
3/8" SAFETY CABLE P/N RLC
3/8" CABLE CLAMP P/N 3/8CCF
RUBBER GROMMET P/N 550001
WASHER P/N 250006
STRANDVISE P/N 370049
STRANDVISE SLEEVE P/N KH4315
SPRING (2" X 6") P/N 370047
SAFETY CABLE POST P/N TL02
DETAIL 'B'
NOTE: THIS SAFETY DEVICE INSTALLATION TO BE USED FOR ALL ROHN TOWERS USING EITHER A HEAVY OR STANDARD LADDER.
STRANDVISE P/N 370049 (SEE DETAIL 'B')
HAND GRIPS (P/N HG01) WITH ONE NUT INSIDE AND ONE NUT OUTSIDE OF EACH CLIP ON POST
SAFETY CABLE POST P/N TL02
U-BOLT ASSY P/N JR810A (4 REQD)
ATTACHMENT PLATE P/N CHC1
3/8" DIA. 1 X 7 SAFETY CABLE P/N RLC (ORDER TOWER HEIGHT PLUS 10')
INTERMEDIATE BRACKET P/N NH13C W/JR69A U-BOLT ASSY (SEE DETAIL 'A')
1/2" X 2-1/4" BOLT ASSY (4 REQ'D) P/N 210021GA
1-1/2" X 4" X 1/4" PLATE CLAMP P/N BCBS (2 REQD)
STRANDVISE (SEE DETAIL 'A')
BOTTOM SAFETY BRACKET P/N BCB1
DESIGN NOTES:
1. ROHN-LOC CLAMP MUST BE USED WITH A 3/8" DIA. 1 X 7 STEEL SAFETY CABLE.
2. IN THE EVENT OF A FALL, INSPECT COMPLETE SAFETY CLIMB SYSTEM AND REPLACE ANY DAMAGED PARTS BEFORE REUSING.
3. ROHN-LOC SYSTEM MEETS OSHA 1910.27 AND ANSI A14.3-1984.
FABRICATION DRAWINGS
(FOR SHOP USE ONLY)
FOR P/N NO. BCB1 & BCBS SEE DRAWING C730517
FOR P/N NO. NH13C SEE DRAWING B740610
FOR P/N NO. CHC1 SEE DRAWING SK730903B
FOR P/N NO. TL02 SEE DRAWING B911108
FOR P/N NO. KH4315 SEE DRAWING B911099
P/N NH13C INTERMEDIATE BRACKET
P/N JR69A U-BOLT ASSY
3/8" DIA. 1 X 7 SAFETY CABLE P/N RLC
1/2" X 2-1/4" BOLT ASSEMBLY (4 REQ'D) P/N 210021GA
1" X 12" SPRING P/N 310018
P/N BCBS (TYP.)
WASHER P/N 250006
FOR ADJUSTMENT, INSERT SCREWDRIVER IN SLOT AND DEPRESS SPRING BY PRYING WASHER INSIDE OF STRANDVISE
P/N BCB1
RETAINER KNOB
STRANDVISE P/N 370049
DETAIL 'A'
NOTE: PAL NUTS PROVIDED FOR ALL BOLTS EXCEPT HAND GRIPS
R4 ADDED PART NUMBERS 6/25/98 JHD
R3 ADDED SPRING AT TOP & REDRAWN 4/17/91 WEB
R2 REVISED BOTTOM BOLTS TO 2-1/4" LG. 4/26/90 JHD
R1 ADDED DETAIL B 7/9/80 KTL
No. Revision Description Date Rev. By Ckd By Appd By
THIS DRAWING IS THE PROPERTY OF ROHN. IT IS NOT TO BE REPRODUCED, COPIED OR TRACED IN WHOLE OR IN PART WITHOUT OUR WRITTEN CONSENT.
ROHN
Title: ROHN-LOC INSTALLATION DETAILS FOR ROHN TOWERS W/LEG OR FACE MOUNTED LADDER
Scale: NONE
Drawn: OH 11/22/74
Checked: WDU 12/3/74
App. Eng.: CW 1/8/75
App. Sales: CAW 1/8/75
DRAWING NO.: C741170R4

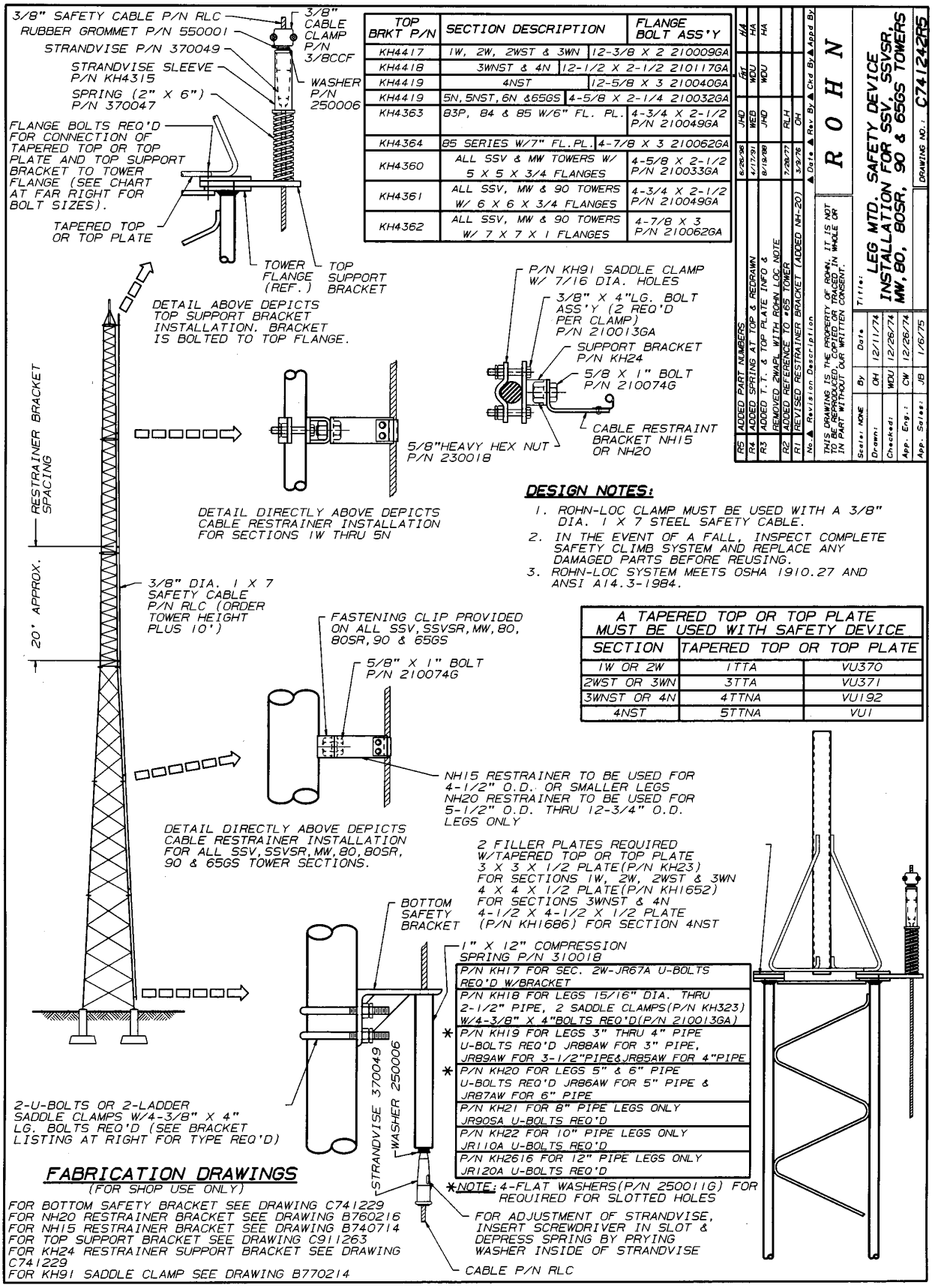

TOP BRKT P/N	SECTION DESCRIPTION	FLANGE BOLT ASS'Y
KH4417	1W, 2W, 2WST & 3WN	12-3/8 X 2 210009GA
KH4418	3WNST & 4N	12-1/2 X 2-1/2 210117GA
KH4419	4NST	12-5/8 X 3 210040GA
KH4419	5N, 5NST, 6N & 65GS	4-5/8 X 2-1/4 210032GA
KH4363	83P, 84 & 85 W/6" FL. PL.	4-3/4 X 2-1/2 P/N 210049GA
KH4364	85 SERIES W/7" FL.PL.	4-7/8 X 3 210062GA
KH4360	ALL SSV & MW TOWERS W/ 5 X 5 X 3/4 FLANGES	4-5/8 X 2-1/2 P/N 210033GA
KH4361	ALL SSV, MW & 90 TOWERS W/ 6 X 6 X 3/4 FLANGES	4-3/4 X 2-1/2 P/N 210049GA
KH4362	ALL SSV, MW & 90 TOWERS W/ 7 X 7 X 1 FLANGES	4-7/8 X 3 P/N 210062GA

No.	Revision Description	Date	By	App'd By
R5	ADDED PART NUMBERS	6/26/98	JHD	HA
R4	ADDED SPRING AT TOP & REDRAWN	4/17/91	WEB	WDU
R3	ADDED T.T. & TOP PLATE INFO & REMOVED 2WAPL WITH ROHN LOC NOTE	8/19/88	JHD	HA
R2	ADDED REFERENCE TO #65 TOWER	7/28/77	RLH	
R1	REVISED RESTRAINER BRACKET (ADDED NH-20)	3/9/76	OH	

	By	Date
Scale: NONE		
Drawn:	OH	12/11/74
Checked:	WDU	12/26/74
App. Eng.:	CW	12/26/74
App. Sales:	JB	1/16/75

A TAPERED TOP OR TOP PLATE MUST BE USED WITH SAFETY DEVICE		
SECTION	TAPERED TOP OR TOP PLATE	
1W OR 2W	1TTA	VU370
2WST OR 3WN	3TTA	VU371
3WNST OR 4N	4TTNA	VU192
4NST	5TTNA	VU1

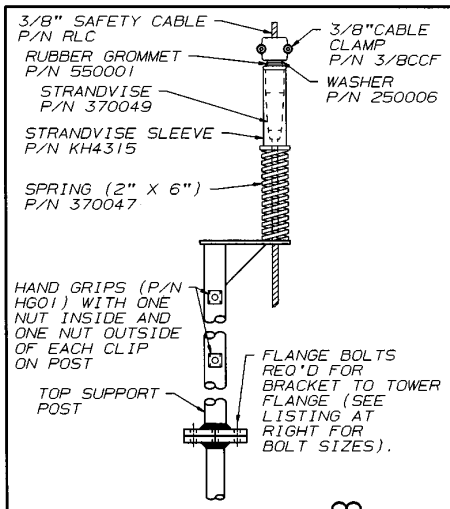

TOP POST P/N	SECTION DESCRIPTION	FLANGE BOLT ASS'Y
KH4317	ALL SSV & MW SECTIONS W/ 5 X 5 X 3/4 FLANGE	4-5/8 X 2-3/4 P/N 210034GA
KH4318	ALL SSV, MW & 90 SECTIONS W/ 6 X 6 X 3/4 FLANGE	4-3/4 X 2-3/4 P/N 210050GA
KH4319	ALL SSV, MW & 90 SECTIONS W/ 7 X 7 X 1 FLANGE	4-7/8 X 3-1/2 P/N 210063GA
KH4325	ALL SSV, MW & 90 SECTIONS W/9-1/2X9-1/2X1-1/4 FLANGE	4-1 X 4-1/4 P/N 210069GA
KH4327	ALL 5N & 5NST SECTIONS	4-5/8 X 2-1/4 P/N 210032GA
KH4321	ALL 6N & 65GS SECTIONS	4-5/8 X 2-1/4 P/N 210032GA
KH4322	ALL 80 W/6" FLANGE PLATES	4-3/4 X 2-3/4 P/N 210050GAW
KH4323	ALL 85 W/7" FLANGE PLATES	4-7/8 X 3-1/2 P/N 210063GA
KH4326	SSVSR SECTIONS W/6 X 6 X 1 FLANGE (W/5"BOLT CIRCLE)	4-3/4 X 3-1/4 P/N 210053GA

No.	Revision Description	Date	By	Chkd By	Appd By
R7	ADDED PART NUMBERS	6/25/96	JHD	FAY	HA
R6	ADDED SPRING & SLEEVE AT TOP & REDRAWN	4/22/91	WEB	WDU	HA
R5	DELETED 4NST REF. & ADDED KH3691	8/17/88	JHD	WDU	HA
R4	ADD P/N KH3327 & 12" LEG BOTTOM BRACKET	4/27/87	WN		
R3	ADDED P/N KH2277	11/30/83	WMN		
R2	ADDED REFERENCE TO #65GS STEPBOLT SECTIONS	9/6/83	JHD		
R1	ADDED BRACKET NO. NH-20	3/15/76	OH		

THIS DRAWING IS THE PROPERTY OF ROHN. IT IS NOT TO BE REPRODUCED, COPIED OR TRACED IN WHOLE OR IN PART WITHOUT OUR WRITTEN CONSENT.

R O H N

Title: **LEG MTD. SAFETY DEVICE WITH OPTIONAL POST FOR SSV, SSVSR, MW, 80, 80SR, 90 & 65GS TOWERS**

DRAWING NO.: C741234R7

	By	Date
Scale: NONE		
Drawn:	WR	12/16/74
Checked:	WDU	12/20/74
App. Eng.:	CW	12/27/74
App. Sales:	CAW	1/8/75

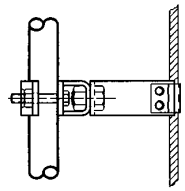

DETAIL DIRECTLY ABOVE DEPICTS CABLE RESTRAINER INSTALLATION FOR SECTIONS 5N THRU 5NST

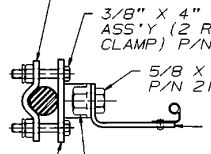

DESIGN NOTES:

1. ROHN-LOC CLAMP MUST BE USED WITH A 3/8" DIA. 1 X 7 STEEL SAFETY CABLE.
2. IN THE EVENT OF A FALL, INSPECT COMPLETE SAFETY CLIMB SYSTEM AND REPLACE ANY DAMAGED PARTS BEFORE REUSING.
3. ROHN-LOC SYSTEM MEETS OSHA 1910.27 AND ANSI A14.3-1984.

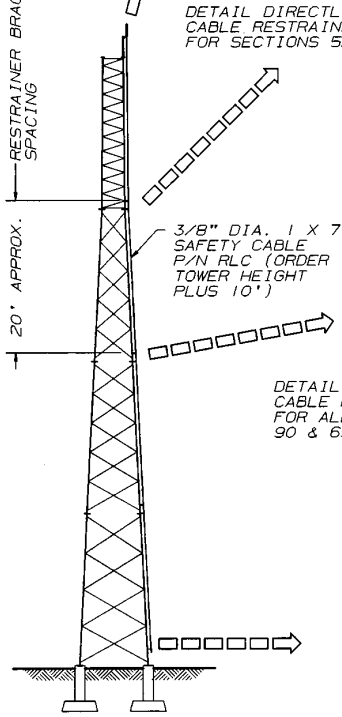

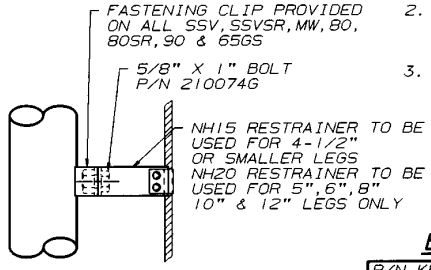

DETAIL DIRECTLY ABOVE DEPICTS CABLE RESTRAINER INSTALLATION FOR ALL SSV, SSVSR, MW, 80, 80SR, 90 & 65GS TOWER SECTIONS.

BOTTOM SAFETY BRACKET

P/N KH18 FOR LEGS 15/16" DIA. THRU 2-1/2" PIPE, 2 SADDLE CLAMPS(P/N KH323) W/4-3/8" X 4"BOLTS REQ'D(P/N 210013GA)
* P/N KH19 FOR LEGS 3" THRU 4" PIPE U-BOLTS REQ'D JR88AW FOR 3" PIPE, JR89AW FOR 3-1/2"PIPE & JR85AW FOR 4"PIPE
* P/N KH20 FOR LEGS 5" & 6" PIPE U-BOLTS REQ'D JR86AW FOR 5" PIPE & JR87AW FOR 6" PIPE
P/N KH21 FOR 8" PIPE LEGS ONLY JR90SA U-BOLTS REQ'D
P/N KH22 FOR 10" PIPE LEGS ONLY JR110A U-BOLTS REQ'D
P/N KH2616 FOR 12" PIPE LEGS ONLY JR120A U-BOLTS REQ'D

*NOTE: 4-FLAT WASHERS(P/N 250011G) FOR 1/2" U-BOLT REQ'D FOR SLOTTED HOLES

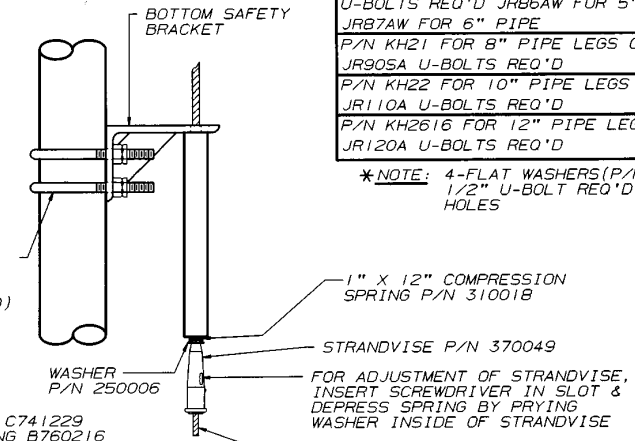

FABRICATION DRAWINGS

(FOR SHOP USE ONLY)

FOR BOTTOM SAFETY BRACKET SEE DRAWING C741229
FOR NH20 RESTRAINER BRACKET SEE DRAWING B760216
FOR NH15 RESTRAINER BRACKET SEE DRAWING B740714
FOR TOP SUPPORT POST SEE DRAWING C911048
FOR KH24 RESTRAINER SUPPORT BRACKET SEE DRAWING C741229
FOR TOP SUPPORT POST (5N & 5NST) SEE DRAWING B911120

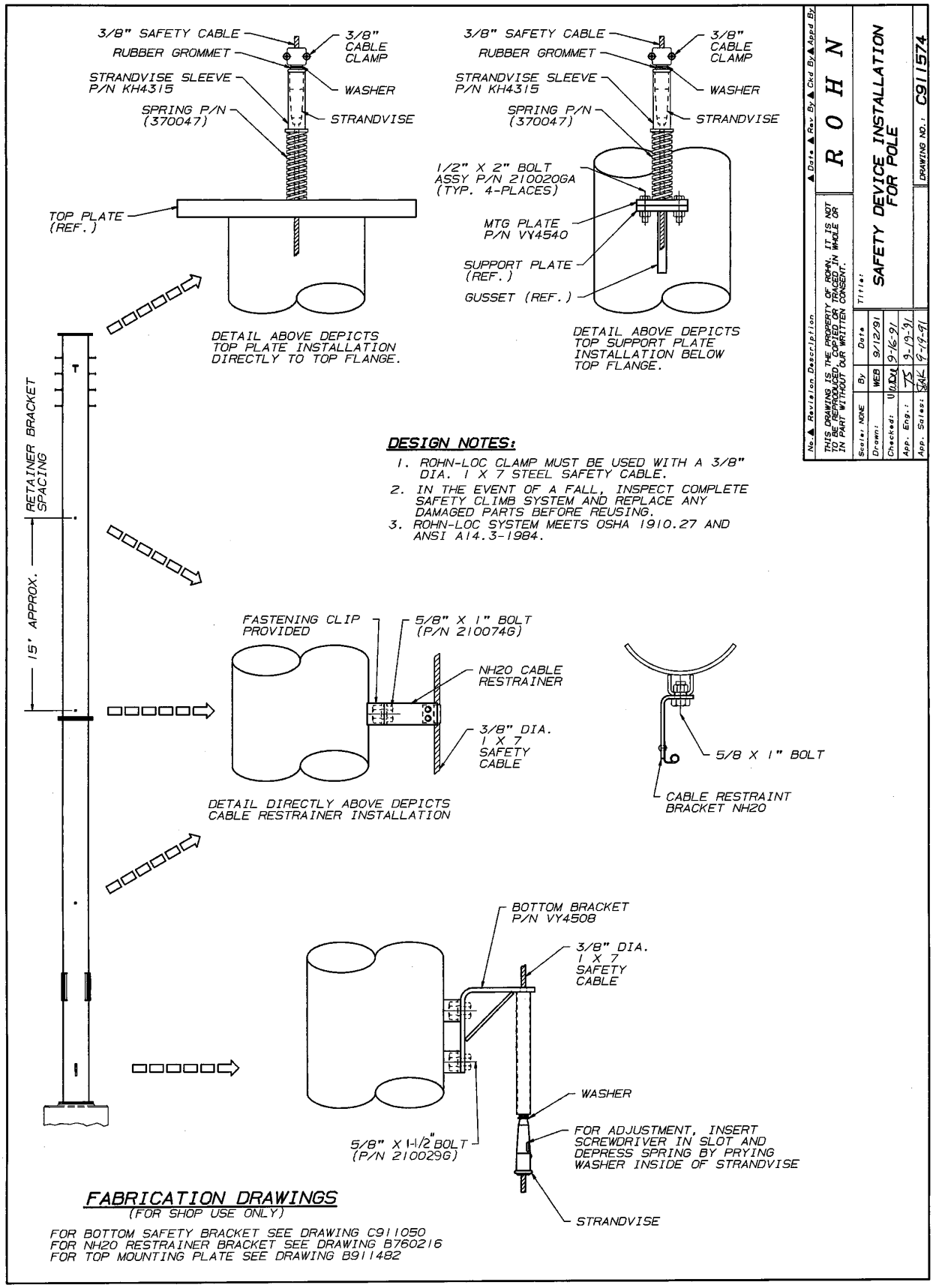
3/8" SAFETY CABLE
RUBBER GROMMET
STRANDVISE SLEEVE P/N KH4315
SPRING P/N (370047)
3/8" CABLE CLAMP
WASHER
STRANDVISE
TOP PLATE (REF.)
DETAIL ABOVE DEPICTS TOP PLATE INSTALLATION DIRECTLY TO TOP FLANGE.
1/2" X 2" BOLT ASSY P/N 210020GA (TYP. 4-PLACES)
MTG PLATE P/N VY4540
SUPPORT PLATE (REF.)
GUSSET (REF.)
DETAIL ABOVE DEPICTS TOP SUPPORT PLATE INSTALLATION BELOW TOP FLANGE.
RETAINER BRACKET SPACING
15' APPROX.
DESIGN NOTES:
1. ROHN-LOC CLAMP MUST BE USED WITH A 3/8" DIA. 1 X 7 STEEL SAFETY CABLE.
2. IN THE EVENT OF A FALL, INSPECT COMPLETE SAFETY CLIMB SYSTEM AND REPLACE ANY DAMAGED PARTS BEFORE REUSING.
3. ROHN-LOC SYSTEM MEETS OSHA 1910.27 AND ANSI A14.3-1984.
FASTENING CLIP PROVIDED
5/8" X 1" BOLT (P/N 210074G)
NH20 CABLE RESTRAINER
3/8" DIA. 1 X 7 SAFETY CABLE
DETAIL DIRECTLY ABOVE DEPICTS CABLE RESTRAINER INSTALLATION
5/8 X 1" BOLT
CABLE RESTRAINT BRACKET NH20
BOTTOM BRACKET P/N VY4508
3/8" DIA. 1 X 7 SAFETY CABLE
WASHER
FOR ADJUSTMENT, INSERT SCREWDRIVER IN SLOT AND DEPRESS SPRING BY PRYING WASHER INSIDE OF STRANDVISE
5/8" X 1-1/2" BOLT (P/N 210029G)
STRANDVISE
FABRICATION DRAWINGS
(FOR SHOP USE ONLY)
FOR BOTTOM SAFETY BRACKET SEE DRAWING C911050
FOR NH20 RESTRAINER BRACKET SEE DRAWING B760216
FOR TOP MOUNTING PLATE SEE DRAWING B911482
No. Revision Description
Date Rev. By Ckd By Appd By
THIS DRAWING IS THE PROPERTY OF ROHN, IT IS NOT TO BE REPRODUCED, COPIED OR TRACED IN WHOLE OR IN PART WITHOUT OUR WRITTEN CONSENT.
ROHN
Title:
SAFETY DEVICE INSTALLATION FOR POLE
Scale: NONE
Drawn: WEB 9/12/91
Checked: 9-16-91
App. Eng.: 9-19-91
App. Sales: 9-19-91
DRAWING NO.: C911574

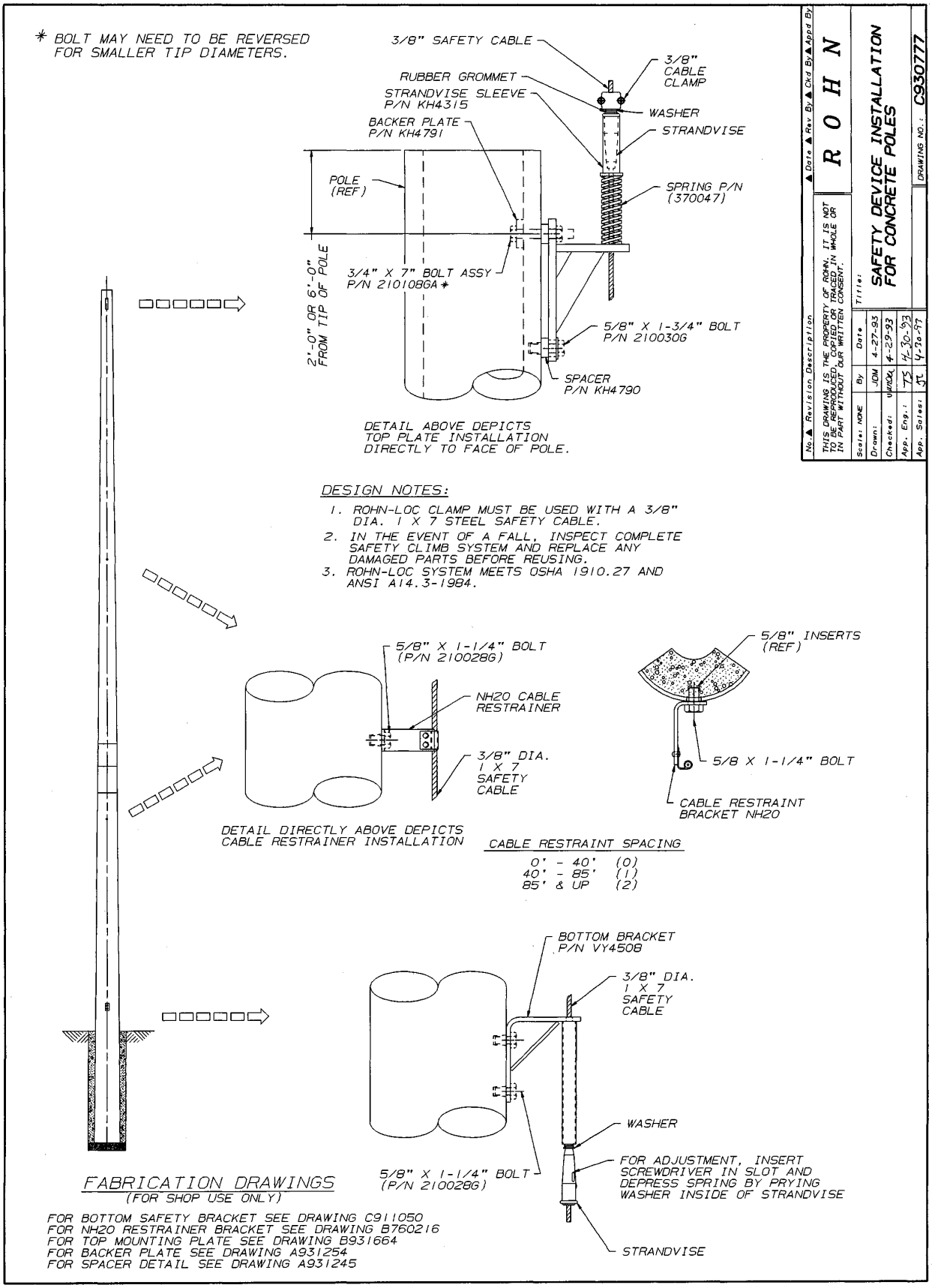
* BOLT MAY NEED TO BE REVERSED FOR SMALLER TIP DIAMETERS.
3/8" SAFETY CABLE
3/8" CABLE CLAMP
RUBBER GROMMET
STRANDVISE SLEEVE P/N KH4315
WASHER
BACKER PLATE P/N KH4791
STRANDVISE
POLE (REF)
SPRING P/N (370047)
2'-0" OR 6'-0" FROM TIP OF POLE
3/4" X 7" BOLT ASSY P/N 210108GA*
5/8" X 1-3/4" BOLT P/N 210030G
SPACER P/N KH4790
DETAIL ABOVE DEPICTS TOP PLATE INSTALLATION DIRECTLY TO FACE OF POLE.
DESIGN NOTES:
1. ROHN-LOC CLAMP MUST BE USED WITH A 3/8" DIA. 1 X 7 STEEL SAFETY CABLE.
2. IN THE EVENT OF A FALL, INSPECT COMPLETE SAFETY CLIMB SYSTEM AND REPLACE ANY DAMAGED PARTS BEFORE REUSING.
3. ROHN-LOC SYSTEM MEETS OSHA 1910.27 AND ANSI A14.3-1984.
5/8" X 1-1/4" BOLT (P/N 210028G)
NH20 CABLE RESTRAINER
3/8" DIA. 1 X 7 SAFETY CABLE
DETAIL DIRECTLY ABOVE DEPICTS CABLE RESTRAINER INSTALLATION
5/8" INSERTS (REF)
5/8 X 1-1/4" BOLT
CABLE RESTRAINT BRACKET NH20
CABLE RESTRAINT SPACING
0' - 40' (0)
40' - 85' (1)
85' & UP (2)
BOTTOM BRACKET P/N VY4508
3/8" DIA. 1 X 7 SAFETY CABLE
WASHER
FOR ADJUSTMENT, INSERT SCREWDRIVER IN SLOT AND DEPRESS SPRING BY PRYING WASHER INSIDE OF STRANDVISE
5/8" X 1-1/4" BOLT (P/N 210028G)
STRANDVISE
FABRICATION DRAWINGS
(FOR SHOP USE ONLY)
FOR BOTTOM SAFETY BRACKET SEE DRAWING C911050
FOR NH20 RESTRAINER BRACKET SEE DRAWING B760216
FOR TOP MOUNTING PLATE SEE DRAWING B931664
FOR BACKER PLATE SEE DRAWING A931254
FOR SPACER DETAIL SEE DRAWING A931245
No. ▲ Revision Description ▲ Date ▲ Rev. By ▲ Ckd By ▲ Appd By
THIS DRAWING IS THE PROPERTY OF ROHN. IT IS NOT TO BE REPRODUCED, COPIED OR TRACED IN WHOLE OR IN PART WITHOUT OUR WRITTEN CONSENT.
ROHN
Title: SAFETY DEVICE INSTALLATION FOR CONCRETE POLES
DRAWING NO.: C930777
Scale: NONE
Drawn: JDM 4-27-93
Checked: 4-29-93
App. Eng.: 4-30-93
App. Sales: 4-30-93

Saftey Climb System - Rail

Part Number	Description	Qantity	Weight #
Safety RAM Rail			
SCL001-1	20' RAM safety rail c/w hardware	each	18
SCL001-2	10' RAM safety rail c/w hardware	each	9
SCL001-3	20' RAM safety rail c/w hardware top	each	18
SCL001-4	10' RAM safety rail c/w hardware top	each	9
SCL001-5	additional RAM clamp kits	each	2
RAM Trolleys			
160389	RAM spring lever trolley c/w carabiner	each	2
Safety Rail Stand-Off			
SCL002-1	safety rail stand-off	each	14
Safety Rail Stand-Off Pinwheel Boom Location			
SCL002-2	stand-off 2 lev. 2.88" OD (73 mm OD) boom	each	29
SCL002-3	stand-off 3 lev. 2.88" OD (73 mm OD) boom	each	39
SCL002-4	stand-off 2 lev. 4.5" OD (114 mm OD) boom	each	29
SCL002-5	stand-off 3 lev. 4.5" OD (114 mm OD) boom	each	39
SCL002-6	stand-off 2 lev. 3 1/2" to 4" OD (89-102 mm OD) sq. boom	each	43
SCL002-7	stand-off 3 lev. 3 1/2" to 4" OD (89-102 mm OD) sq. boom	each	60

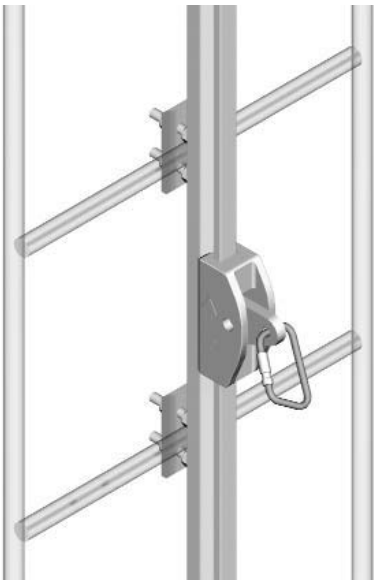

The RAM Safety Climb Rail System is designed to mount directly to fixed ladders to provide fall protection while climbing. The system's unique design allows the trolley to be installed only one way, thus eliminating the possibility of an accident by installing the trolley upside down. The rails clamp to round or square 3/4" (19 mm) diameter ladder rungs. This product meets or exceeds all OSHA requirements for climbing safety. The RAM system is ordered by selecting (1) 10' or 20' Top Rail Kit and then selecting the appropriate number of 10' and 20' Rail Kits to achieve your tower height requirements. Mounting brackets and a rail splice are furnished with each of the 10' and 20' kits. Both the rail and the trolley are manufactured from premium-quality 6061-T6 aluminum. The trolley is ordered separately.

Saftey Climb System - Cable

Part Number	Description	Qantity	Weight #
Safety RAM Cable-Ladder			
SCL010-1	25' RAM safety cable system	kit of 1	48
SCL001-2	50' RAM safety cable system	kit of 1	54
SCL010-3	100' RAM safety cable system	kit of 1	66
SCL010-4	150' RAM safety cable system	kit of 1	78
SCL010-5	200' RAM safety cable system	kit of 1	91
SCL010-6	250' RAM safety cable system	kit of 1	102
SCL010-7	300' RAM safety cable system	kit of 1	113
SCL010-8	350' RAM safety cable system	kit of 1	126
SCL010-9	400' RAM safety cable system	kit of 1	138
SCL010-10	500' RAM safety cable system	kit of 1	162
	Note: Each cable system is complete with "L" type cable guides.		
RAM Cable Safety Sleeve (Slider)			
SCL010-S	RAM cable safety sleeve (slider) kit	kit of 1	2
Optional Items:			
160418	straight cable guide	kit of 1	1
160419	"L" type cable guide	kit of 1	1
CL010F	cable guide extension bar	kit of 1	3

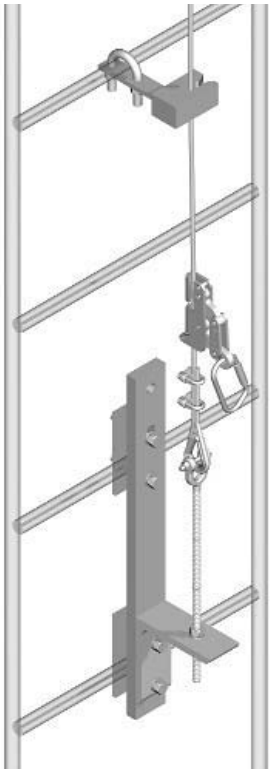

The RAM Safety Climb Cable System is designed to provide fall protection while climbing or descending a variety of ladders or vertical structures. The stainless steel slider (fall arrestor) can be attached or removed from the cable at any point. It is secured with a compatible carabiner, supplied with the slider, to the sternal D-ring on any approved climbing harness. The slider is not included in the system and must be ordered separately. The user is free to climb and descend with full use of the hands. In the event of a fall, the slider will automatically arrest the fall. The slider has a builtin mechanism preventing it from operating in the upside-down position. Kits are complete with all mounting hardware, top and bottom mounts, standoff brackets and cable. The RAM slider is designed specifically for use on 7x19 constructed 3/8" galvanized aircraft cable . This system will also support the use of DBI Sala's slider.

Blank

ROHN™ Products

Tower Lighting

Products for a Growing World of Technology

OBSTRUCTION LIGHTING COMPONENTS

Part Number	Description	Wt.
B1R	300 MM Beacon with Red Glass – No Bulbs	77
OB1	Single Obstruction Light (Red), 3/4" Side Entrance – No Bulbs	3
OB2	Double Obstruction Light (Red), 3/4" Bottom Entrance – No Bulbs	6
RPH1P	Photocontrol Complete w/Socket and Outdoor Housing (120 Volt)	4
RPH2P	Photocontrol Complete w/Socket and Outdoor Housing (230 Volt)	4
FA1SSX1	Non-Alarm Beacon Flasher Only w/Outdoor Housing (For Use with One Beacon at the Top) (120 Volt) (Photocontrol or Time Switch Provided by Others)	17
FA2SSX1	Non-Alarm Beacon Flasher Only w/Outdoor Housing (For Use with Two Beacons, Synchronizing or Alternating Flash, (120 Volt)	18
FA3SSX1	Non-Alarm Beacon Flasher Only in Outdoor Housing (For Use with Three Beacons) (120 Volt)	19
FA1SSX1P	Non-Alarm Lighting Control with Outdoor Housing and Photocontrol, Red Only (For Use with One Red Beacon at the Top, (120 Volt)	18
FA2SSX1P**	Non-Alarm Lighting Control with Outdoor Housing and Photocontrol, Red Only (For Use with Two Beacons, Synchronizing or Alternating Flash) (120 Volt)	19
FA3SSX1P	Non-Alarm Lighting Control with Outdoor Housing and Photocontrol, Red Only (For Use with Three Beacons) (120 Volt)	20
A3LCA*	Alarmed Lighting Control with Indoor Housing and Photocontrol, Red Only or Dual Lighting (For Use with One Red Beacon at the Top – Close on Fail Contacts)	20
A5LCA*	Alarmed Lighting Control with Indoor Housing and Photocontrol, Red Only or Dual Lighting (For Use with Two Red Beacons at the Top – Close on Fail Contacts)	20
ULC350	Alarmed Lighting Control with Indoor Housing and Photocontrol, Red Only or Dual Lighting (For Use with One Red Beacon at the Top – Open or Close on Fail Contacts)	16
ULC700	Alarmed Lighting Control with Indoor Housing and Photocontrol, Red Only or Dual Lighting (For Use with Three Red Beacons and Two Levels of Side Lights – Open or Close on Fail Contacts)	42
LC12HAS*	Alarmed Lighting Control with Indoor Housing and Photocontrol, Red Only or Dual Lighting (For Use with One Red Beacon at the Top and Two Intermediate Red Beacons – Close on Fail Contacts)	29
LC12HAS13*	Alarmed Lighting Control (Same as Above Except Open on Fail Contacts)	29
LC22HAS	Alarmed Lighting Control with Indoor Housing and Photocontrol, Red Only or Dual Lighting (For Use with Two Red Beacons at the Top and Two Intermediate Red Beacons – Close on Fail Contacts)	29
LBRR1200**	Load Balance Resistor, Outdoor/Indoor Housing (1200 Watts)	10
LBRRKIT	Load Balance Resistor (Same as Above) with Wire, Conduit, and Locknuts to Connect Tower Lighting Kit to Radio Equipment Building	19
CB1	Conduit Breather, 3/4" Tap	1/2
JB4C	JB4 Junction Box with Cable Support, 3/4" Tap	3
JB4TC	JB4 Junction Box with 4 Contact Terminal Blocks and Cable Support, 3/4" Tap	3
JB7TC	JB7 Junction Box with 7 Contact Terminal Blocks and Cable Support, 1" Vertical Tap, 3/4" Horizontal Tap	6
B620W	Beacon Bulb (3000 Hour) – 120 Volt (Available in Case of 24 Bulbs)	
OB116W	Obstruction Light Bulb (8000 Hour) – 120 Volt (Available in Case of 120 Bulbs)	
OB100W	Obstruction LIght Bulb (2000 Hour) – 230 Volt (Available in Case of 120 Bulbs)	
WR100	Can of 100' x 1/2" Stainless Steel Wraplock with Buckles, Keys, and Ratchet Wrench	3
LRB1	Lightning Rod Assembly, 7/8" x 6' Solid Aluminum, with Base for 300 MM Beacon	6
LR	Lightning Rod Only, 7/8" x 6' Solid Aluminum, with Nut (ROHN Beacon Mounting Plates Drilled to Fit This Rod)	3
LRCL	Lightning Rod Only, 5/8" x 5' Copper Clad, with Nuts (ROHN Beacon Mounting Plates Drilled to Fit This Rod)	6

*Discontinued. Available on special request. Contact the factory for further details.

**An LBRR1200 is required with FA2SSX1P control where constant line loading is required (on one beacon tower).

Note: Variations on above controls and parts for discontinued controls are available upon request.

Alarm controls are available in outdoor housings. Add NEMA4 to part number.

Prices and specifications are subject to change without notice.

F.O.B. Peoria, Illinois

TOWER OBSTRUCTION LIGHTING KITS

Tower Height	Standard Kit Part Number	230V, 50/60 Cycle Kit Part Number	*Self-Supporting Conversion Kit Part Number
Exposed Wire			
to 150'	RA1E	RA1EE	—
Conduit			
to 150'	RA1C	RA1CE	—
151' to 350'	FA1C	***	**FAKIT (1 req'd)
351' to 500'	A2C1	***	**FAKIT (2 req'd)
501' to 700'	A2C2	***	—
Alarm			
to 150'	RA1CM	—	—
151' to 350'	FA1CM	—	**FAKIT (1 req'd)
351' to 500'	A2C1A	—	**FAKIT (2 req'd)
501' to 700'	A2C2A	—	—

All kits include photocontrol, necessary wire, fittings, junction boxes, lights, and flasher (where required) in outdoor housing, except alarm kits. Alarm kits include control in indoor housing with remote photocell. See drawings and parts lists for details.

Notes: 1) Above kits are per FAA Advisory Circular 70/7460-1J.
2) Prices for special lighting kits including medium/high intensity strobes, dual lighting (red and strobes), and towers over 700' are available upon request.
3) Lamp life on 230 volt kits (RA1EE and RA1CE) is very short.

* In addition to a standard kit, order a conversion kit for each OB light level where tower face width is more than 8'. (A FAKIT8 conversion kit is required on towers with a face width exceeding 41", up to and including 8' face width.) The material in the conversion kit is sufficient to run from inside corner ladder to face. (See ** below.)

** Conversion kit part number (FAKIT15, FAKIT25, FAKIT35, FAKIT45) is determined by face width at DB light level. (For example, if tower face width is 13'4" at the OB light level, order part number FAKIT15.)

*** Order standard kit plus one transformer XFRFA1C (for towers 151' to 350') or XFRFA2C (for towers 351' to 700').

(**Note:** Transformer may not be necessary on AM towers. Consult the factory for additional information.)

Prices and specifications are subject to change without notice.

F.O.B. Peoria, Illinois

REPLACEMENT PARTS FOR OBSTRUCTION LIGHTING

Part Number

OB1 & OB2 Obstruction Lights
(Dwg. C620701/C621306)

530230	OB Red Lens (AP3522R)
OBG1	Gasket
OBR	OB Retainer Ring
OBL	OB Latch
50714	OB Bulb Receptacle

B1 Beacon* **(Dwg. 770040)**

711130	Red Filter Screens (AP3524) (2 Req'd. per Beacon)
BGS	Set of 9 Beacon Gaskets
BGB1	Gasket (4 per Beacon)
BGM1	Gasket (1 per Beacon)
BGT1	Gasket (1 per Beacon)
BGT2	Gasket (3 per Beacon)
WBS	Beacon High Temperature Wiring (Inside) – Complete Set
23X546	Beacon Bulb Receptacle
550020	Clear Glass Silicon Sealant (glue) – 3 Oz. Tube

B1R Beacon **(Dwg. D770040)**

AP3557	Upper Beacon Lens, Red
AP3556	Center Beacon Lens, Red
AP3555	Lower Beacon Lens, Red (2 Req'd. per Beacon)
BGSR	Set of 5 Beacon Gaskets
BGB1	Gasket (2 per Beacon)
BGM1	Gasket (1 per Beacon)
BGT1	Gasket (1 per Beacon)
BGT2	Gasket (1 per Beacon)
WBS	Beacon High Temperature Wiring (Inside) – Complete Set
23X546	Beacon Bulb Receptacle
550020	Clear Glass Silicon Sealant (Glue) – 3 Oz. Tube

Miscellaneous

2237	Water Tight Connector for 2 Conductor (2 #12) UF Cable
2534	Water Tight Connector for 2 #14 SO
2535	Water Tight Connector for 3 Conductor (1 #6/1 #8/1 #12)

Note: Replacement Castings for B1 and B1R Beacons Available Upon Request

*Discontinued. Not available as a complete unit

Prices and specifications are subject to change without notice.

F.O.B. Peoria, Illinois

Part Number

RPH1* & RPH2* Photocontrols **(Dwg. D770021)**

KH2250	Printed Circuit Board, Assembled (120 Volt)
KH2251	Printed Circuit Board, Assembled (230 Volt)
K10P11D55	Relay (Solder Type)
NSL446	Photocell Eye Only
R5K10W	Resistor (230 Volt)
TC493B	Capacitor
512	Rectifier

RPH1P & RPH2P Photocontrols **(Dwg. C930709)**

RPCP1	Photocontrol (120 Volt)
RPCP2	Photocontrol (230 Volt)
RPCPS	Socket Only for RPCP 1/RPCP2

FA1SSX1P, FA2SSX1P & FA3SSX1P Flashers & PC
(Dwg. C931016/C930988/C930987/C940639)

FA1SSX1	1 Ckt Flasher in Outdoor Housing
FA2SSX1	2 Ckt Flasher in Outdoor Housing
FA3SSX1	3 Ckt Flasher in Outdoor Housing
FA1SSX2	1 Ckt Flasher Panel (120 Volt)
FA2SSX2	2 Ckt Flasher Panel (120 Volt)
FA3SSX2	3 Ckt Flasher Panel (120 Volt)
RPH1P	Photocontrol (120 Volt)
SSBFA120	Flasher Printed Circuit Board, Assembled (120 Volt)
SSBFA230	Flasher Printed Circuit Board, Assembled (230 Volt)
510018	Jumper, Program
510167	Regulator
510168	Timer Oscillator
510170	Diode, Red Light Emitting
510171	Suppressor (27 Volt)
510172	Suppressor, Transient (120 Volt)
510173	Rectifier (50 Volt)
510204	Transformer (120 Volt)
510205	Transformer (230 Volt)
6154H	Relay, Solid State

A3LCA* & A5LCA* Flashers & PC with Alarm
(Dwg. D930533/C840385L)

A3PCBA	Printed Circuit Board, Assembled
A5PCBA	Printed Circuit Board, Assembled
LCAPC	Photocell Only
NSL446	Photocell Eye Only
TLC43	Power Transformer
TLC48	Relay, Plug In (12 VDC)
510172	Supressor, Transient (120 Volt)
510194	Current Transformer
6154H	Relay, Solid State
A3LCANEMA4	Complete Control w/Outdoor Housing and Photocell
A5LCANEMA4	Complete Control w/Outdoor Housing and Photocell

REPLACEMENT PARTS FOR OBSTRUCTION LIGHTING

Part Number

ULC350 & ULC700 Flasher & Photocontrol with Alarm (Dwg. C941430/D950891)

ULC350PNL	Panel Only (for ULC350)
ULC700PNL	Panel Only (for ULC700)
EBPCB	Expansion Board (ULC700)
CSPCB	Current Sensor Printed Circuit Board
MCPCB	Main Control Printed Circuit Board
RDPCB	Relay Driver Printed Circuit Board
RPH1P	Photocontrol (120 Volt)
510124	Relay, 4PDT (120 VAC)
510128	Relay, DPDT (120V/25A)
6154H	Relay, Solid State
ULC350NEMA4	Complete ULC350 Control w/Outdoor Housing
ULC700NEMA4	Complete ULC700 Control w/Outdoor Housing

LC12HAS* & LC22HAS* Flashers & PC with Alarms (Dwg. C930539/D930540/C921411)

A5PCBA11S	Printed Circuit Board, Assembled
LCAPC	Photocell Only
NSL446	Photocell Eye Only
TLC43	Power Transformer
TLC48	Relay, Plug In (12 VDC)
510041	Module, Lamp Out
510129	Relay, Transfer
510172	Suppressor, Transient (120 Volt)
510194	Current Transformer
510215A	Relay, Dual Solid State
6154H	Relay, Solid State
LC12HASNEMA	Complete Control in Outdoor Housing

A3BFA2 Flasher (Dwg. C930988/D930987)

SSBFA120	Printed Circuit Board, Assembled (120 Volt)
SSBFA230	Printed Circuit Board, Assembled (120 Volt)
510018	Jumper, Program
510167	Regulator
510168	Timer Oscillator
510170	Diode, Red Light Emitting
510171	Suppressor (27 Volt)
510172	Suppressor, Transient (12 Volt)
510173	Rectifier (50 Volt)
510204	Transformer (120 Volt)
510205	Transformer (230 Volt)
6154H	Relay, Solid State

Part Number

A3SS1 & A5SS1 Flasher with Photocontrol* (Dwg. C820880/C820829)

NSL446	Photocell Eye Only
PCBA3/A5SSA	Printed Circuit Board, Assembled
RPC12	Photocell Complete (120 Volt/230 Volt)
510165	Transformer
510172	Suppressor, Transient (120 Volt)
6154H	Relay, Solid State

A3SSX1 Flasher Only* (Dwg. C821240)

PCBA3/A5SSXA	Printed Circuit Board, Assembled
510165	Transformer
510172	Suppressor, Transient (120 Volt)
6154H	Relay, Solid State

FA1SS1 & FA2SS1 Flasher with Photocontrol* (Dwg. C861053/C861054/C861052)

NSL446	Photocell Eye Only
RPC123	Photocell Complete (120 Volt/230 Volt)
SSBFA120	Flasher Printed Circuit Board, Assembled (120 V
SSBFA230	Flasher Printed Circuit Board, Assembled (120 V
SSPCA	Photocell Printed Circuit Board, Assembled (120 Volt/230 Volt)
WH1	1 Ckt Flasher Wiring Harness
WH2	2 Ckt Flasher Wiring Harness
510172	Suppressor, Transient (120 Volt)
6154H	Relay, Solid State

A3LCA11 & A5LCA11 Flasher PC with Alarm* (Dwg. C902054/D920606)

A3PCBA11	Printed Circuit Board, Assembled
A5PCBA11	Printed Circuit Board, Assembled
RPC123	Photocell Only
NSL446	Photocell Eye Only
TLC43	Power Transformer
TLC48	Relay, Plug In (12 VDC)
510129	Relay, Transfer
510172	Suppressor, Transient (120 Volt)
6154H	Relay, Solid State

RC231PC Flasher & Photocontrol* (Dwg. B770717)

SSM11	Flasher Unit
RC23PCBR1	Printed Circuit Board Assembly
RPC12	Photocell Only

*Discontinued. Not available as a complete unit.

Note: For additional replacement parts not listed, contact the factory.

Prices and specifications are subject to change without notice.

F.O.B. Peoria, Illinois

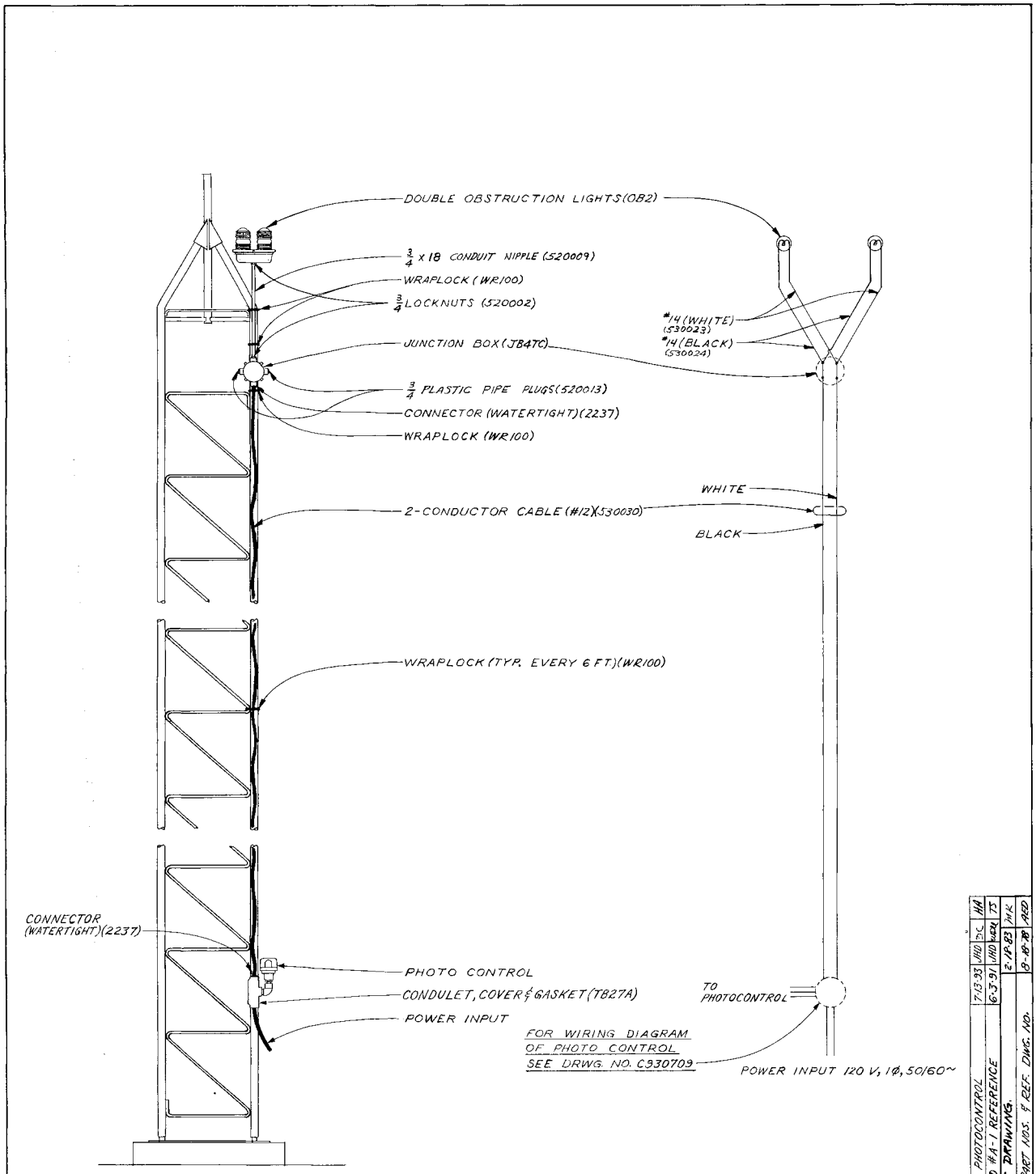

MATERIAL LAYOUT

WIRING DIAGRAM

LIGHTING KIT - EXPOSED WIRE - RAIE

TOWER HEIGHTS UP TO 150' (45.72M.)

R4	REVISED PHOTOCONTROL	7-13-93	JHD	TC	HH
R3	REMOVED #A-1 REFERENCE	6-3-91	JHD	WEA	TS
R2	UPDATE DRAWING.			2-12-83	JHK
R1	ADDED PART NOS. & REF. DWG. NO.			9-18-78	RED

NOTES:
1. PIPE THREAD COMPOUND IS SUPPLIED AND MUST BE USED ON ALL CONNECTIONS.
2. ALL CONNECTORS SHOULD BE COMPLETELY TIGHT.
3. 3/4" = 19.1MM 18" = 457MM 6' = 1.83M
4. PHOTO CONTROL SHOULD FACE NORTHERN SKY.

DRAWN L. HOFFMAN	CUSTOMER	TITLE
CHECKED RSV		INSTALLATION DETAILS NO. RA IE LIGHTING KIT
APPROVED DAK		DRAWING NO.
DATE APR. 3, 1962	ROHN®	C 620403 R4
SCALE NONE		

RA1E LIGHTING KIT

To 150' w/Exposed Wire
120 Volt AC

Qty.	Part Number	Description
1	OB2	Double Obstruction Light
2	OB116W	Obstruction Light Bulbs (120 Volt)
1	JB4TC	Junction Box
2	2237	Water Tight Connectors
1	520009	Conduit Nipple 3/4" x 18"
2	520013	Plastic Pipe Plugs 3/4"
2	520002	Conduit Lock Nuts 3/4"
1	WR100	Can Stainless Steel Wraplock (1/2" x 100')
1	520023	Can Joint Compound
1	RPH1	Photo-Electric Control (120 Volt)
10'	530024	#14 Wire (Black)
10'	530023	#14 Wire (White)
—	530030	2 conductor #12 cable (tower height plus 5')
1	OBLITECAT	Obstruction Lighting Catalog

For Guyed or Self-Supporting Tower.

Prices and specifications are subject to change without notice.
F.O.B. Peoria, Illinois

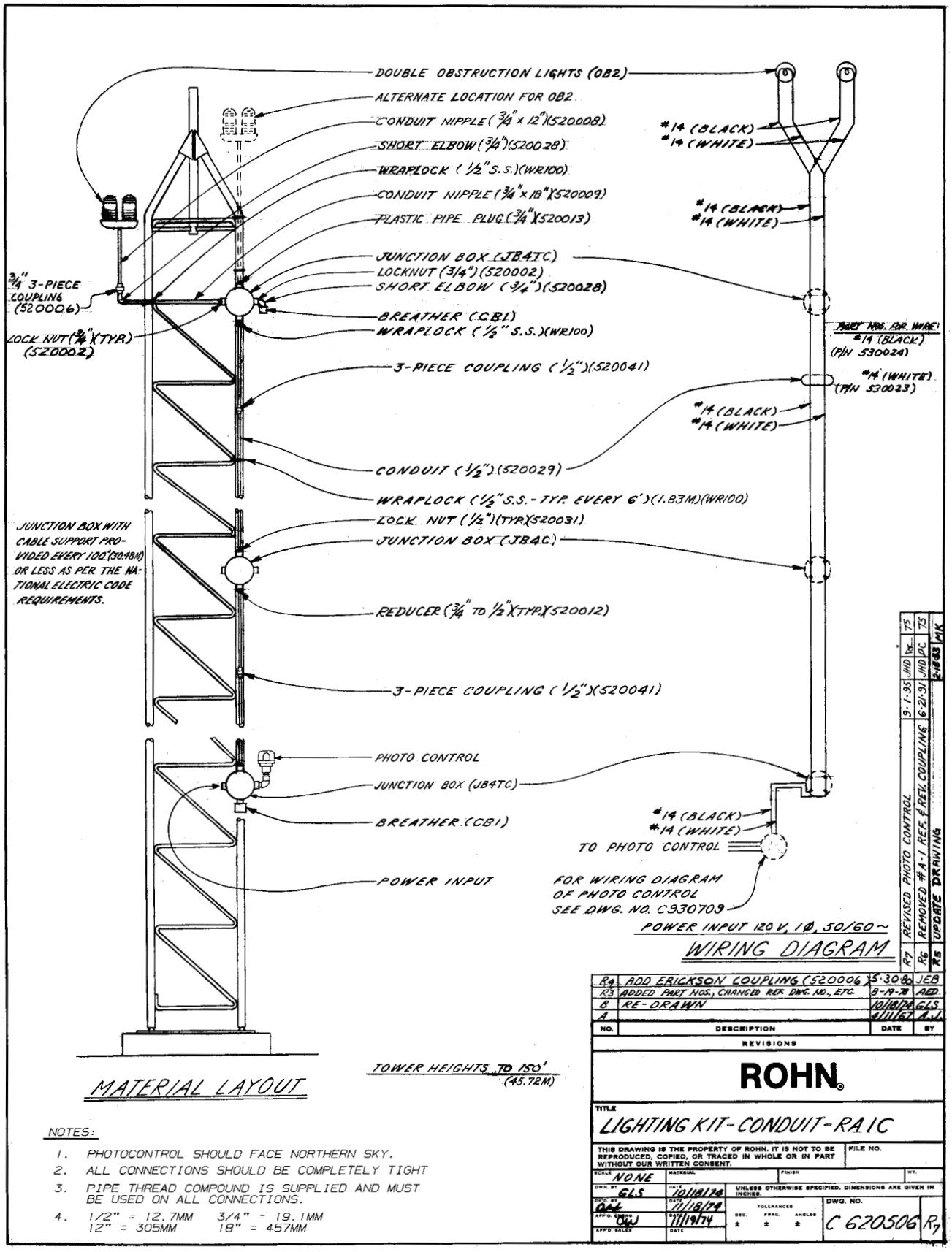
DOUBLE OBSTRUCTION LIGHTS (OB2)
ALTERNATE LOCATION FOR OB2
CONDUIT NIPPLE (3/4" x 12") (520008)
SHORT ELBOW (3/4") (520028)
WRAPLOCK (1/2" S.S.) (WR100)
CONDUIT NIPPLE (3/4" x 18") (520009)
PLASTIC PIPE PLUG (3/4") (520013)
JUNCTION BOX (JB4TC)
LOCKNUT (3/4") (520002)
SHORT ELBOW (3/4") (520028)
BREATHER (CB1)
WRAPLOCK (1/2" S.S.) (WR100)
3/4" 3-PIECE COUPLING (520006)
LOCK NUT (3/4") (TYP.) (520002)
3-PIECE COUPLING (1/2") (520041)
CONDUIT (1/2") (520029)
WRAPLOCK (1/2" S.S. - TYP. EVERY 6') (1.83M) (WR100)
LOCK NUT (1/2") (TYP.) (520031)
JUNCTION BOX (JB4C)
JUNCTION BOX WITH CABLE SUPPORT PROVIDED EVERY 100' (30.48M) OR LESS AS PER THE NATIONAL ELECTRIC CODE REQUIREMENTS.
REDUCER (3/4" TO 1/2") (TYP.) (520012)
3-PIECE COUPLING (1/2") (520041)
PHOTO CONTROL
JUNCTION BOX (JB4TC)
BREATHER (CB1)
POWER INPUT
#14 (BLACK)
#14 (WHITE)
#14 (BLACK)
#14 (WHITE)
PART NOS. FOR WIRE:
#14 (BLACK) (P/N 530024)
#14 (WHITE) (P/N 530023)
#14 (BLACK)
#14 (WHITE)
#14 (BLACK)
#14 (WHITE)
TO PHOTO CONTROL
FOR WIRING DIAGRAM OF PHOTO CONTROL SEE DWG. NO. C930709
POWER INPUT 120 V, 1Ø, 50/60~
WIRING DIAGRAM
MATERIAL LAYOUT
TOWER HEIGHTS TO 150' (45.72M)
NOTES:
1. PHOTOCONTROL SHOULD FACE NORTHERN SKY.
2. ALL CONNECTIONS SHOULD BE COMPLETELY TIGHT
3. PIPE THREAD COMPOUND IS SUPPLIED AND MUST BE USED ON ALL CONNECTIONS.
4. 1/2" = 12.7MM 3/4" = 19.1MM 12" = 305MM 18" = 457MM
R7 REVISED PHOTO CONTROL 9-1-95 JHD 12-75 MK
R6 REMOVED #A-1 REF. & REV. COUPLING 6-21-91 JHD 12-75
R5 UPDATE DRAWING 2-18-83 MK
R4 ADD ERICKSON COUPLING (520006) 5-30-80 JEB
R3 ADDED PART NOS., CHANGED REF. DWG. NO., ETC. 9-19-78 AED
B RE-DRAWN 10/18/74 GLS
A 4/11/67 A.J.
NO. DESCRIPTION DATE BY
REVISIONS
ROHN
TITLE
LIGHTING KIT-CONDUIT-RA IC
THIS DRAWING IS THE PROPERTY OF ROHN. IT IS NOT TO BE REPRODUCED, COPIED, OR TRACED IN WHOLE OR IN PART WITHOUT OUR WRITTEN CONSENT.
FILE NO.
SCALE NONE
MATERIAL
FINISH
WT.
DWN. BY GLS DATE 10/18/74
UNLESS OTHERWISE SPECIFIED, DIMENSIONS ARE GIVEN IN INCHES.
CHK. BY DAY DATE 11/18/74
APPD. ENGR. OWJ DATE 11/19/74
APPD. SALES DATE
TOLERANCES DEC. FRAC. ANGLES
DWG. NO. C 620506 R7

RA1C LIGHTING KIT

To 150' w/Conduit
120 Volt AC

Qty.	Part Number	Description
1	OB2	Double Obstruction Light
2	OB116W	Obstruction Light Bulbs (120 Volt)
2	JB4TC	Junction Boxes
1	JB4C	Junction Box
2	520028	Short Elbows 3/4"
2	CB1	Conduit Breathers
1	520006	3 Piece Coupling 3/4"
2	520041	3 Piece Coupling 1/2"
3	520013	Plastic Pipe Plugs 3/4"
8	520002	Conduit Lock Nuts 3/4"
4	520031	Conduit Lock Nuts 1/2"
4	520012	Reducers 3/4" to 1/2"
1	WR100	Can Stainless Steel Wraplock (1/2" x 100')
1	520023	Can Joint Compound
1	RPH1P	Photo-Electric Control (120 Volt)
1	520007	Conduit Nipple 3/4" x 4"
1	520008	Conduit Nipple 3/4" x 12"
1	520009	Conduit Nipple 3/4" x 18"
—	530024	#14 Wire (Black) (Tower Height Plus 15')
—	530023	#14 Wire (White) (Tower Height Plus 15')
—	520029	Rigid Galvanized Conduit 1/2" (Tower Height)
1	OBLITECAT	Obstruction Lighting Catalog

For Guyed or Self-Supporting Tower.

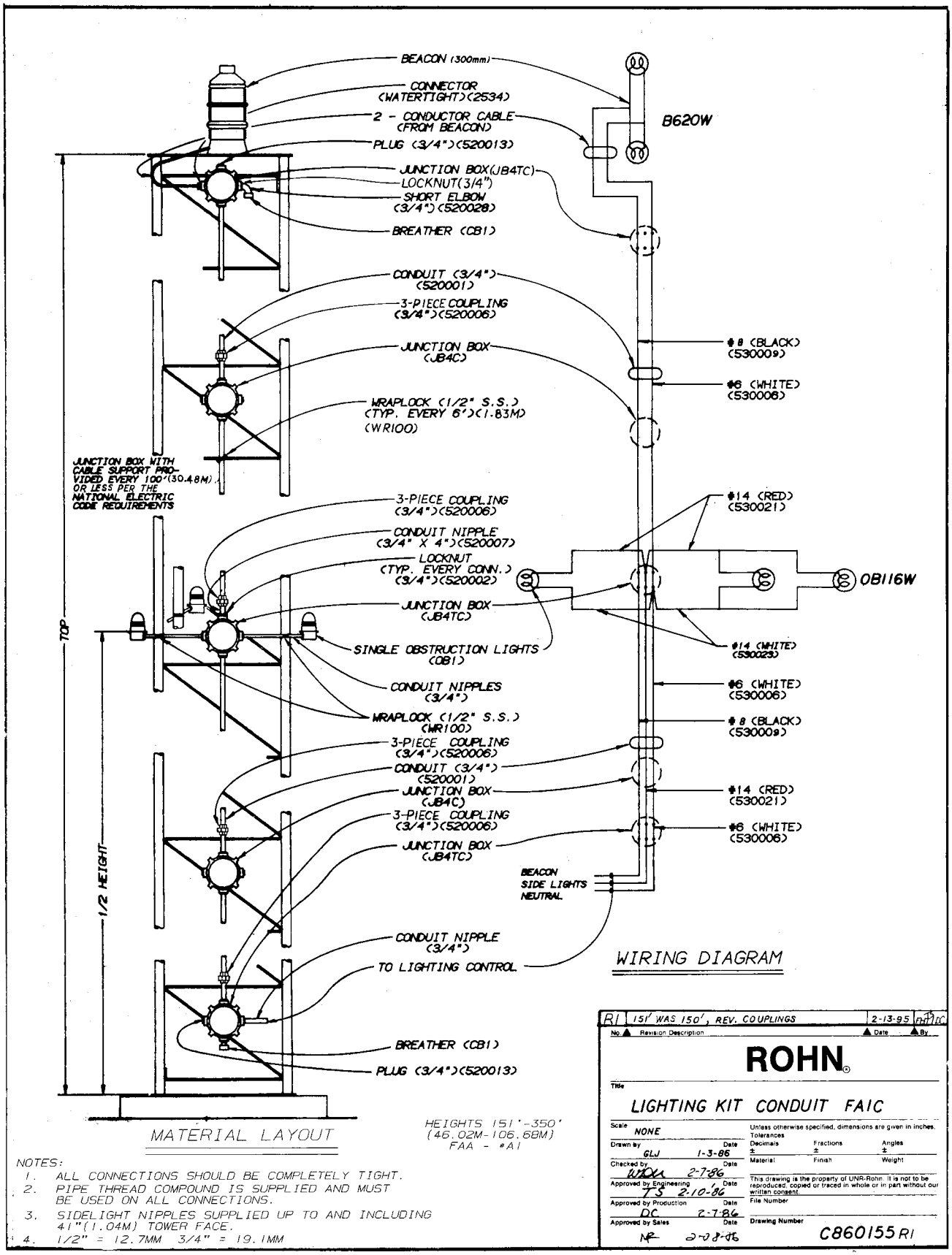
BEACON (300mm)
CONNECTOR (WATERTIGHT)(2534)
2 - CONDUCTOR CABLE (FROM BEACON)
PLUG (3/4")(520013)
JUNCTION BOX(JB4TC)
LOCKNUT(3/4")
SHORT ELBOW (3/4")(520028)
BREATHER (CB1)
CONDUIT (3/4") (520001)
3-PIECE COUPLING (3/4")(520006)
JUNCTION BOX (JB4C)
WRAPLOCK (1/2" S.S.) (TYP. EVERY 6')(1.83M) (WR100)
JUNCTION BOX WITH CABLE SUPPORT PROVIDED EVERY 100'(30.48M) OR LESS PER THE NATIONAL ELECTRIC CODE REQUIREMENTS
3-PIECE COUPLING (3/4")(520006)
CONDUIT NIPPLE (3/4" X 4")(520007)
LOCKNUT (TYP. EVERY CONN.) (3/4")(520002)
JUNCTION BOX (JB4TC)
SINGLE OBSTRUCTION LIGHTS (CB1)
CONDUIT NIPPLES (3/4")
WRAPLOCK (1/2" S.S.) (WR100)
3-PIECE COUPLING (3/4")(520006)
CONDUIT (3/4") (520001)
JUNCTION BOX (JB4C)
3-PIECE COUPLING (3/4")(520006)
JUNCTION BOX (JB4TC)
CONDUIT NIPPLE (3/4")
TO LIGHTING CONTROL
BREATHER (CB1)
PLUG (3/4")(520013)
TOP
1/2 HEIGHT
B620W
#8 (BLACK) (530009)
#6 (WHITE) (530006)
#14 (RED) (530021)
OB116W
#14 (WHITE) (530023)
#6 (WHITE) (530006)
#8 (BLACK) (530009)
#14 (RED) (530021)
#6 (WHITE) (530006)
BEACON
SIDE LIGHTS
NEUTRAL
WIRING DIAGRAM
MATERIAL LAYOUT
HEIGHTS 151'-350' (46.02M-106.68M) FAA - #A1
NOTES:
1. ALL CONNECTIONS SHOULD BE COMPLETELY TIGHT.
2. PIPE THREAD COMPOUND IS SUPPLIED AND MUST BE USED ON ALL CONNECTIONS.
3. SIDELIGHT NIPPLES SUPPLIED UP TO AND INCLUDING 41"(1.04M) TOWER FACE.
4. 1/2" = 12.7MM 3/4" = 19.1MM
R1 151' WAS 150', REV. COUPLINGS 2-13-95
No. Revision Description Date By
ROHN
Title
LIGHTING KIT CONDUIT FAIC
Scale NONE
Drawn by GLJ 1-3-86
Checked by 2-7-86
Approved by Engineering TS 2-10-86
Approved by Production DC 2-7-86
Approved by Sales 2-08-86
Unless otherwise specified, dimensions are given in inches. Tolerances
Decimals ± Fractions ± Angles ±
Material Finish Weight
This drawing is the property of UNR-Rohn. It is not to be reproduced, copied or traced in whole or in part without our written consent.
File Number
Drawing Number C860155 R1

FA1C LIGHTING KIT

151' to 350' w/Conduit
120 Volt AC

Qty.	Part Number	Description
3	OB1	Single Obstruction Lights
3	JB4TC	Junction Boxes
2	JB4C	Junction Boxes
1	2534	Water Tight Connector
1	520028	Short Elbow 3/4"
2	CB1	Conduit Breathers
6	520006	3 Piece Couplings 3/4"
2	520062	Pipe Couplings 3/4"
2	520013	Plastic Pipe Plugs 3/4"
1	TB27A	TB Condulet, Gasket, and Cover 3/4”
17	520002	Conduit Lock Nuts 3/4"
1	WR100	Can Stainless Steel Wraplock (1/2" x 100')
1	520023	Can Joint Compound
25'	530021	#14 Wire (Red)
25'	530023	#14 Wire (White)
3	520007	Conduit Nipple 3/4" x 4"
—	530021	#14 Wire (Red) (1/2 Tower Height plus 15')
3	520009	Conduit Nipples 3/4" x 18"
1	520083	Elbows 3/4" x 12" with 30° Bend
1	OBLITECAT	Obstruction Lighting Catalog
1	FA1SSX1P	Outdoor Flasher Box w/Flasher, Remote Photocell, and Hardware
3	520008	Conduit Nipples 3/4" x 12"
1	B1R	Beacon with Red Glass
2	B620W	Beacon Bulbs (120 Volt)
3	OB116W	Obstruction Light Bulbs (120 Volt)
—	530006	#6 Wire (White) (Tower Height Plus 15')
—	530009	#8 Wire (Black) (Tower Height Plus 15')
—	520001	Rigid Galvanized Conduit 3/4" (Tower Height)

Conversion kit is required on towers over 41" face width. Conversion kit consists of required material for installing side lights on wider face width structures. Conversion kit must be ordered as a separate item. Additional information is available upon request.

See Drawing No. C860155R1 For Details

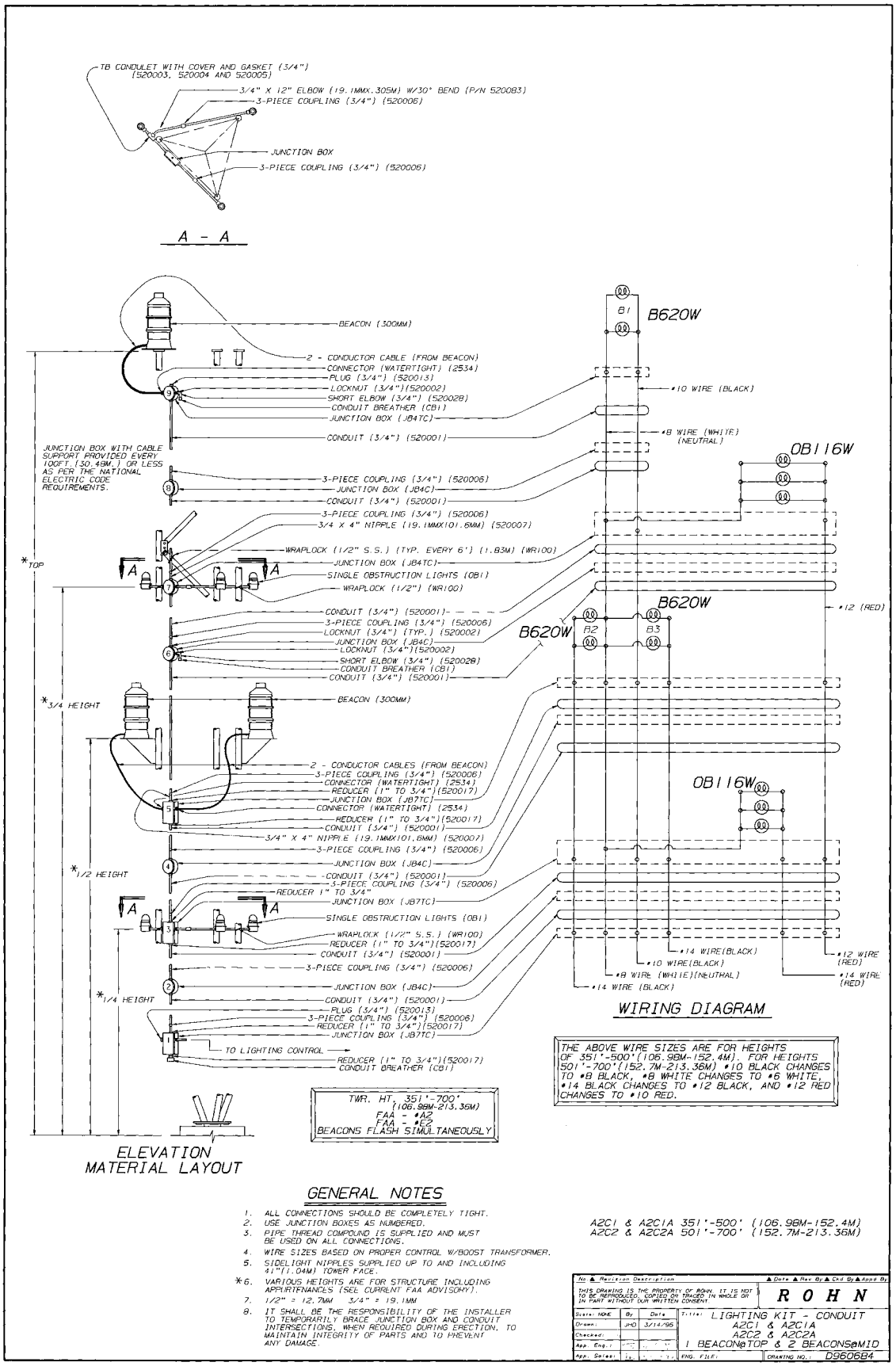
TB CONDULET WITH COVER AND GASKET (3/4") (520003, 520004 AND 520005)
3/4" X 12" ELBOW (19.1MMX.305M) W/30° BEND (P/N 520083)
3-PIECE COUPLING (3/4") (520006)
JUNCTION BOX
3-PIECE COUPLING (3/4") (520006)
A - A
BEACON (300MM)
2 - CONDUCTOR CABLE (FROM BEACON)
CONNECTOR (WATERTIGHT) (2534)
PLUG (3/4") (520013)
LOCKNUT (3/4")(520002)
SHORT ELBOW (3/4") (52002B)
CONDUIT BREATHER (CB1)
JUNCTION BOX (JB4TC)
CONDUIT (3/4") (520001)
JUNCTION BOX WITH CABLE SUPPORT PROVIDED EVERY 100FT. (30.49M.) OR LESS AS PER THE NATIONAL ELECTRIC CODE REQUIREMENTS.
3-PIECE COUPLING (3/4") (520006)
JUNCTION BOX (JB4C)
CONDUIT (3/4") (520001)
3-PIECE COUPLING (3/4") (520006)
3/4 X 4" NIPPLE (19.1MMX101.6MM) (520007)
WRAPLOCK (1/2" S.S.) (TYP. EVERY 6') (1.83M) (WR100)
JUNCTION BOX (JB4TC)
SINGLE OBSTRUCTION LIGHTS (OB1)
WRAPLOCK (1/2") (WR100)
*TOP
A
A
CONDUIT (3/4") (520001)
3-PIECE COUPLING (3/4") (520006)
LOCKNUT (3/4") (TYP.) (520002)
JUNCTION BOX (JB4C)
LOCKNUT (3/4")(520002)
SHORT ELBOW (3/4") (52002B)
CONDUIT BREATHER (CB1)
CONDUIT (3/4") (520001)
*3/4 HEIGHT
BEACON (300MM)
2 - CONDUCTOR CABLES (FROM BEACON)
3-PIECE COUPLING (3/4") (520006)
CONNECTOR (WATERTIGHT) (2534)
REDUCER (1" TO 3/4")(520017)
JUNCTION BOX (JB7TC)
CONNECTOR (WATERTIGHT) (2534)
REDUCER (1" TO 3/4")(520017)
CONDUIT (3/4") (520001)
3/4" X 4" NIPPLE (19.1MMX101.6MM) (520007)
3-PIECE COUPLING (3/4") (520006)
JUNCTION BOX (JB4C)
*1/2 HEIGHT
CONDUIT (3/4") (520001)
3-PIECE COUPLING (3/4") (520006)
REDUCER 1" TO 3/4"
JUNCTION BOX (JB7TC)
A
A
SINGLE OBSTRUCTION LIGHTS (OB1)
WRAPLOCK (1/2" S.S.) (WR100)
REDUCER (1" TO 3/4")(520017)
CONDUIT (3/4") (520001)
3-PIECE COUPLING (3/4") (520006)
JUNCTION BOX (JB4C)
*1/4 HEIGHT
CONDUIT (3/4") (520001)
PLUG (3/4") (520013)
3-PIECE COUPLING (3/4") (520006)
REDUCER (1" TO 3/4")(520017)
JUNCTION BOX (JB7TC)
TO LIGHTING CONTROL
REDUCER (1" TO 3/4")(520017)
CONDUIT BREATHER (CB1)
ELEVATION
MATERIAL LAYOUT
TWR. HT. 351'-700' (106.98M-213.36M)
FAA - #A2
FAA - #E2
BEACONS FLASH SIMULTANEOUSLY
B1
B620W
#10 WIRE (BLACK)
#8 WIRE (WHITE) (NEUTRAL)
OB116W
B620W
B2
B3
B620W
#12 (RED)
OB116W
#14 WIRE(BLACK)
#10 WIRE(BLACK)
#8 WIRE (WHITE)(NEUTHAL)
#14 WIRE (BLACK)
#12 WIRE (RED)
#14 WIRE (RED)
WIRING DIAGRAM
THE ABOVE WIRE SIZES ARE FOR HEIGHTS OF 351'-500'(106.98M-152.4M). FOR HEIGHTS 501'-700'(152.7M-213.36M) #10 BLACK CHANGES TO #8 BLACK, #8 WHITE CHANGES TO #6 WHITE, #14 BLACK CHANGES TO #12 BLACK, AND #12 RED CHANGES TO #10 RED.
GENERAL NOTES
1. ALL CONNECTIONS SHOULD BE COMPLETELY TIGHT.
2. USE JUNCTION BOXES AS NUMBERED.
3. PIPE THREAD COMPOUND IS SUPPLIED AND MUST BE USED ON ALL CONNECTIONS.
4. WIRE SIZES BASED ON PROPER CONTROL W/BOOST TRANSFORMER.
5. SIDELIGHT NIPPLES SUPPLIED UP TO AND INCLUDING 41"(1.04M) TOWER FACE.
*6. VARIOUS HEIGHTS ARE FOR STRUCTURE INCLUDING APPURTENANCES (SEE CURRENT FAA ADVISORY).
7. 1/2" = 12.7MM 3/4" = 19.1MM
8. IT SHALL BE THE RESPONSIBILITY OF THE INSTALLER TO TEMPORARILY BRACE JUNCTION BOX AND CONDUIT INTERSECTIONS, WHEN REQUIRED DURING ERECTION, TO MAINTAIN INTEGRITY OF PARTS AND TO PREVENT ANY DAMAGE.
A2C1 & A2C1A 351'-500' (106.98M-152.4M)
A2C2 & A2C2A 501'-700' (152.7M-213.36M)
No. Revision Description Date Rev. By Ckd By Appd By
THIS DRAWING IS THE PROPERTY OF ROHN. IT IS NOT TO BE REPRODUCED, COPIED OR TRACED IN WHOLE OR IN PART WITHOUT OUR WRITTEN CONSENT.
ROHN
Scale: NONE By Date
Drawn: JHO 3/14/96
Checked:
App. Eng.:
App. Sales:
Title: LIGHTING KIT - CONDUIT
A2C1 & A2C1A
A2C2 & A2C2A
1 BEACON@TOP & 2 BEACONS@MID
ENG. File:
DRAWING NO.: D9606B4

A2C1 & A2C2 LIGHTING KIT

(Non-Alarm Unit)
351' to 700' w/Conduit

Qty.	Part Number	Description
6	OB1	Single Obstruction Lights
4	JB4C	Junction Boxes
2	JB4TC	Junction Boxes
3	JB7TC	Junction Boxes
3	2534	Water Tight Connectors
6	520017	Reducers 1" to 3/4"
2	520028	Short Elbows 3/4"
3	CB1	Conduit Breathers
12	520006	Erickson Couplings 3/4"
3	520013	Plastic Pipe Plugs 3/4"
2	TB27A	TB Condulets, Gaskets, and Covers 3/4"
40	520002	Conduit Lock Nuts 3/4"
2	WR100	Cans Stainless Steel Wraplock (1/2" x 100')
2	520023	Cans Joint Compound
50'	530021	#14 Wire (Red)
50'	530023	#14 Wire (White)
5	520007	Conduit Nipples 3/4" x 4"
6	520008	Conduit Nipples 3/4" x 12"
6	520009	Conduit Nipples 3/4" x 18"
4	520062	Pipe Couplers 3/4"
2	520083	Elbows 3/4" x 12" with 30° Bend
1	OBLITECAT	Obstruction Lighting Catalog
1	FA3SSX1PXFM	Outdoor Flasher Box with Flasher, Remote Photocell, Hardware, and Boost Transformers
3	B1R	Beacons w/Red Glass
6	B620W	Beacon Bulbs (120 volt)
6	OB116W	Obstruction Light Bulbs (120 volt)
–	530012	#8 Wire (white) (Tower Height Plus 40′)
–	530016	#10 Wire (black) (Tower Height Plus 40′)
–	530017	#12 Wire (red) (3/4 Tower Height Plus 30′)
–	530021	#14 Wire (red) (1/4 Tower Height Plus 20′)
–	530024	2 – #14 Wire (black) (1/2 Tower Height Plus 20′)
–	520001	Rigid Galvanized Conduit 3/4″ (Tower Height)

The above wire sizes are for tower heights of 351′ to 500′. For heights 501′ to 700′, #8 white (530012) changes to #6 white (530006); #10 black (530016) changes to #8 black (530009); and #12 red (530017) changes to #10 red (530014), and #14 black (530024) changes to #12 black (530018).

Conversion kit may be required on self-supporting towers, depending upon base size, and would consist of required material for installing side lights on varying face width structures. Conversion kit must be ordered as a separate item. Additional information is available upon request.

Note: Wire lengths may vary due to structure height including appurtenances.

Prices and specifications are subject to change without notice.

F.O.B. Peoria, Illinois

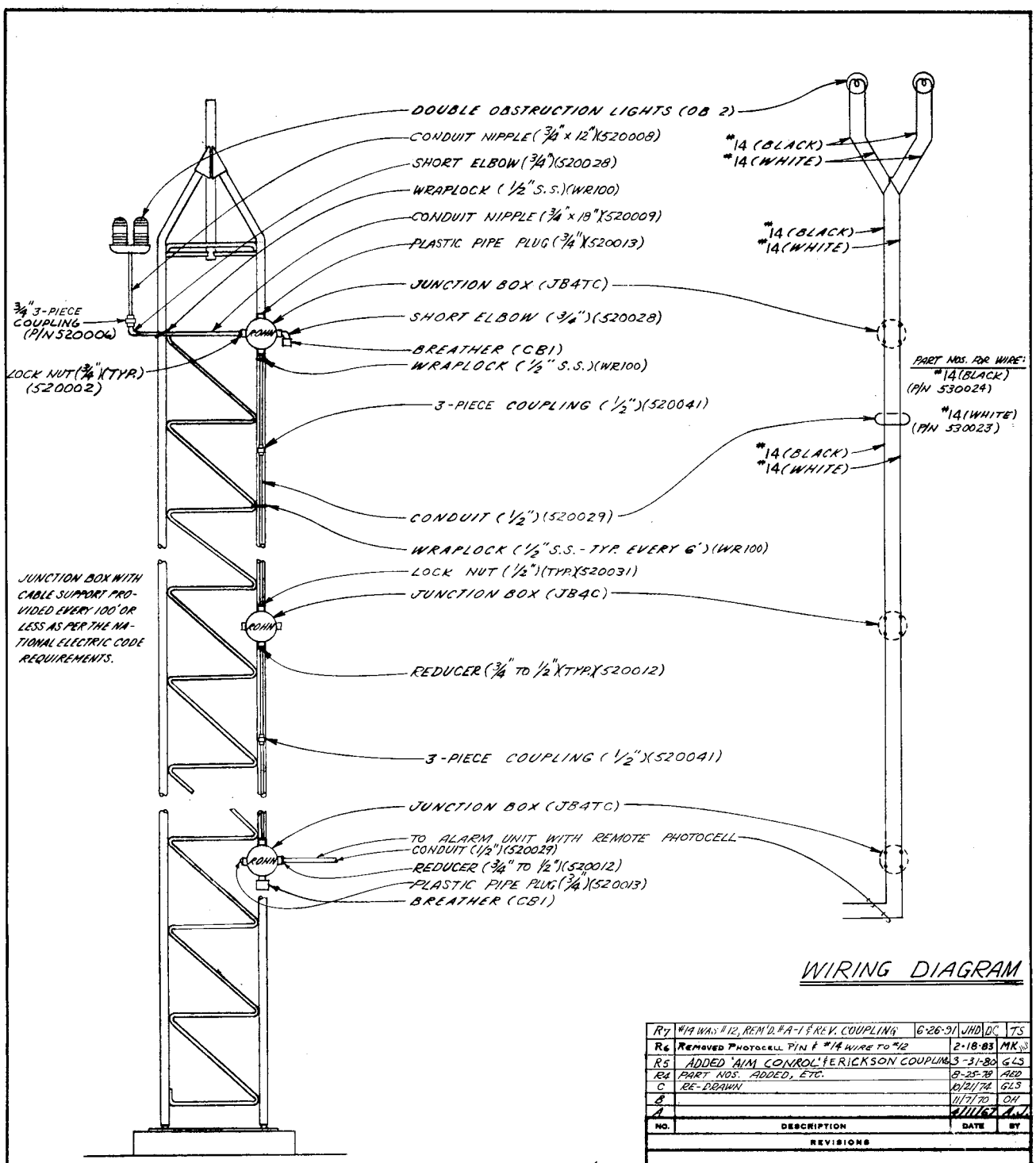
DOUBLE OBSTRUCTION LIGHTS (OB 2)
CONDUIT NIPPLE (3/4" x 12")(520008)
SHORT ELBOW (3/4")(520028)
WRAPLOCK (1/2" S.S.)(WR100)
CONDUIT NIPPLE (3/4" x 18")(520009)
PLASTIC PIPE PLUG (3/4")(520013)
JUNCTION BOX (JB4TC)
SHORT ELBOW (3/4")(520028)
BREATHER (CB1)
WRAPLOCK (1/2" S.S.)(WR100)
3-PIECE COUPLING (1/2")(520041)
CONDUIT (1/2")(520029)
WRAPLOCK (1/2" S.S. - TYP. EVERY 6')(WR100)
LOCK NUT (1/2")(TYP.)(520031)
JUNCTION BOX (JB4C)
REDUCER (3/4" TO 1/2")(TYP.)(520012)
3-PIECE COUPLING (1/2")(520041)
JUNCTION BOX (JB4TC)
TO ALARM UNIT WITH REMOTE PHOTOCELL
CONDUIT (1/2")(520029)
REDUCER (3/4" TO 1/2")(520012)
PLASTIC PIPE PLUG (3/4")(520013)
BREATHER (CB1)
3/4" 3-PIECE COUPLING (P/N 520006)
LOCK NUT (3/4")(TYP.) (520002)
JUNCTION BOX WITH CABLE SUPPORT PROVIDED EVERY 100' OR LESS AS PER THE NATIONAL ELECTRIC CODE REQUIREMENTS.
#14 (BLACK)
#14 (WHITE)
#14 (BLACK)
#14 (WHITE)
PART NOS. FOR WIRE:
#14 (BLACK) (P/N 530024)
#14 (WHITE) (P/N 530023)
#14 (BLACK)
#14 (WHITE)
WIRING DIAGRAM
MATERIAL LAYOUT
TOWER HEIGHTS TO 150'
R7 #14 WAS #12, REM'D. #A-1 & REV. COUPLING 6-26-91 JHD DC TS
R6 REMOVED PHOTOCELL PIN & #14 WIRE TO #12 2-18-83 MK
R5 ADDED 'AIM CONROL' & ERICKSON COUPLING 3-31-80 GLS
R4 PART NOS. ADDED, ETC. 8-25-78 AED
C RE-DRAWN 10/21/74 GLS
B 11/7/70 OH
A 4/11/67 A.J.
NO. DESCRIPTION DATE BY
REVISIONS
ROHN
TITLE
LIGHTING KIT-CONDUIT-RA1CM
THIS DRAWING IS THE PROPERTY OF ROHN. IT IS NOT TO BE REPRODUCED, COPIED, OR TRACED IN WHOLE OR IN PART WITHOUT OUR WRITTEN CONSENT.
FILE NO.
10/21/74
C630826
R7
NOTES:
2. PHOTO CONTROL SHOULD FACE NORTHERN SKY.
1. ALL CONNECTIONS SHOULD BE COMPLETELY TIGHT.

RA1CM LIGHTING KIT
To 150' w/Conduit

Qty.	Part Number	Description
1	OB2	Double ObstructionLight
2	OB116W	Obstruction Light Bulbs (120 volt)
2	JB4TC	Junction Boxes
1	JB4C	Junction Box
2	520028	Short Elbows 3/4″
2	CB1	Conduit Breathers 3/4″
1	520006	3 Piece Coupling 3/4″
2	520041	3 Piece Coupling 1/2″
2	520013	Plastic Pipe Plugs 3/4″
8	520002	Conduit Lock Nuts 3/4″
6	520031	Conduit Lock Nuts 1/2″
5	520012	Reducers 3/4″ to 1/2″
1	WR100	Can Stainless Steel Wraplock (1/2″ x 100′)
1	520023	Can Joint Compound
1	520008	Conduit Nipple 3/4″ x 12″
1	520009	Conduit Nipple 3/4″ x 18″
–	530024	#14 Wire (black) (Tower Height Plus 30′)
–	530023	#14 Wire (white) (Tower Height Plus 30′)
–	520029	Rigid Galvanized Conduit 1/2″ (Tower Height Plus 20′)
1	A3LCA11	Indoor Alarm Control w/Remote Photocell
1	OBLITECAT	Obstruction Lighting Catalog

For guyed or self-supporting tower.

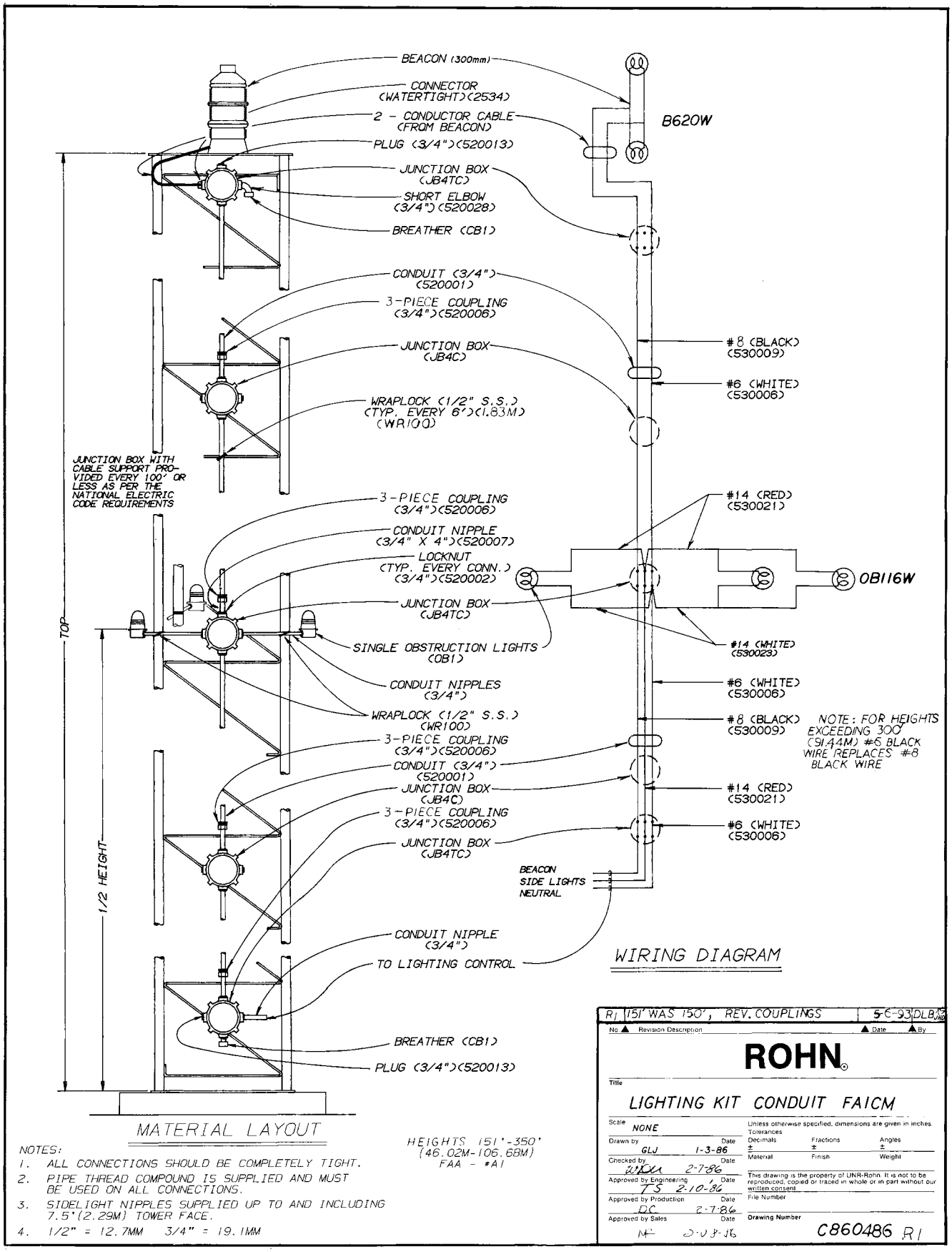
BEACON (300mm)
CONNECTOR (WATERTIGHT)(2534)
2 - CONDUCTOR CABLE (FROM BEACON)
PLUG (3/4")(520013)
JUNCTION BOX (JB4TC)
SHORT ELBOW (3/4")(520028)
BREATHER (CB1)
CONDUIT (3/4") (520001)
3-PIECE COUPLING (3/4")(520006)
JUNCTION BOX (JB4C)
WRAPLOCK (1/2" S.S.) (TYP. EVERY 6')(1.83M) (WR100)
JUNCTION BOX WITH CABLE SUPPORT PROVIDED EVERY 100' OR LESS AS PER THE NATIONAL ELECTRIC CODE REQUIREMENTS
3-PIECE COUPLING (3/4")(520006)
CONDUIT NIPPLE (3/4" X 4")(520007)
LOCKNUT (TYP. EVERY CONN.) (3/4")(520002)
JUNCTION BOX (JB4TC)
SINGLE OBSTRUCTION LIGHTS (OB1)
CONDUIT NIPPLES (3/4")
WRAPLOCK (1/2" S.S.) (WR100)
3-PIECE COUPLING (3/4")(520006)
CONDUIT (3/4") (520001)
JUNCTION BOX (JB4C)
3-PIECE COUPLING (3/4")(520006)
JUNCTION BOX (JB4TC)
CONDUIT NIPPLE (3/4")
TO LIGHTING CONTROL
BREATHER (CB1)
PLUG (3/4")(520013)
TOP
1/2 HEIGHT
B620W
#8 (BLACK) (530009)
#6 (WHITE) (530006)
#14 (RED) (530021)
OB116W
#14 (WHITE) (530023)
#6 (WHITE) (530006)
#8 (BLACK) (530009)
NOTE: FOR HEIGHTS EXCEEDING 300' (91.44M) #6 BLACK WIRE REPLACES #8 BLACK WIRE
#14 (RED) (530021)
#6 (WHITE) (530006)
BEACON
SIDE LIGHTS
NEUTRAL
WIRING DIAGRAM
MATERIAL LAYOUT
NOTES:
1. ALL CONNECTIONS SHOULD BE COMPLETELY TIGHT.
2. PIPE THREAD COMPOUND IS SUPPLIED AND MUST BE USED ON ALL CONNECTIONS.
3. SIDELIGHT NIPPLES SUPPLIED UP TO AND INCLUDING 7.5'(2.29M) TOWER FACE.
4. 1/2" = 12.7MM 3/4" = 19.1MM
HEIGHTS 151'-350' (46.02M-106.68M) FAA - #A1
R1 151' WAS 150', REV. COUPLINGS 5-6-93 DLB
No. Revision Description Date By
ROHN
Title
LIGHTING KIT CONDUIT FAICM
Scale NONE
Drawn by GLJ Date 1-3-86
Checked by Date 2-7-86
Approved by Engineering Date 2-10-86
Approved by Production DC Date 2-7-86
Approved by Sales Date 2-13-86
Unless otherwise specified, dimensions are given in inches. Tolerances
Decimals ± Fractions ± Angles ±
Material Finish Weight
This drawing is the property of UNR-Rohn. It is not to be reproduced, copied or traced in whole or in part without our written consent.
File Number
Drawing Number C860486 R1

FA1CM LIGHTING KIT
151′ to 350′ w/Conduit

Qty.	Part Number	Description
3	OB1	Single Obstruction Light
3	JB4TC	Junction Boxes
2	JB4C	Junction Boxes
1	2534	Water Tight Connector
1	520028	Short Elbow 3/4″
2	CB1	Conduit Breathers
6	520006	Erickson Couplings 3/4″
2	520062	Pipe Couplings 3/4″
2	520013	Plastic Pipe Plugs 3/4″
1	TB27A	TB Condulet, Gasket, and Cover 3/4″
3	520031	Conduit Lock Nuts 1/2″
19	520002	Conduit Lock Nuts 3/4″
1	WR100	Can Stainless Steel Wraplock (1/2″ x 100′)
1	520023	Can Joint Compound
25′	530021	#14 Wire (Red)
25′	530023	#14 Wire (White)
2	520007	Conduit Nipple 3/4″ x 4″
–	530021	#14 Wire (Red) (1/2 Tower Height Plus 30′)
3	520009	Conduit Nipples 3/4″ x 18″
1	520083	Elbows 3/4″ to 12″ with 30° Bend
1	OBLITECAT	Obstruction Lighting Catalog
1	ULC350	Indoor Alarm Control with Remote Photocell
3	520008	Conduit Nipples 3/4″ x 12″
1	B1R	Beacon w/Red Glass
2	B620W	Beacon Blubs (120 volt)
3	OB116W	Obstruction Light Bulbs (120 volt)
–	530006	#6 Wire (White) (Tower Height Plus 30′)
–	530009	#8 Wire (Black) (Tower Height Plus 30′)
–	520001	Rigid Galvanized Conduit 3/4″ (Tower Height Plus 10′)
10′	520029	Rigid Galvanized Conduit 1/2″ (For Remote Photocell)

Conversion kit is required on towers over 41″ face width. Conversion kit consists of required material for installing side lights on wider face width structures. Conversion kit must be ordered as a separate item. Additional information is available upon request.

Note: #6 black wire (530005) replaces #8 black wire (530009) if tower height exceeds 300′.

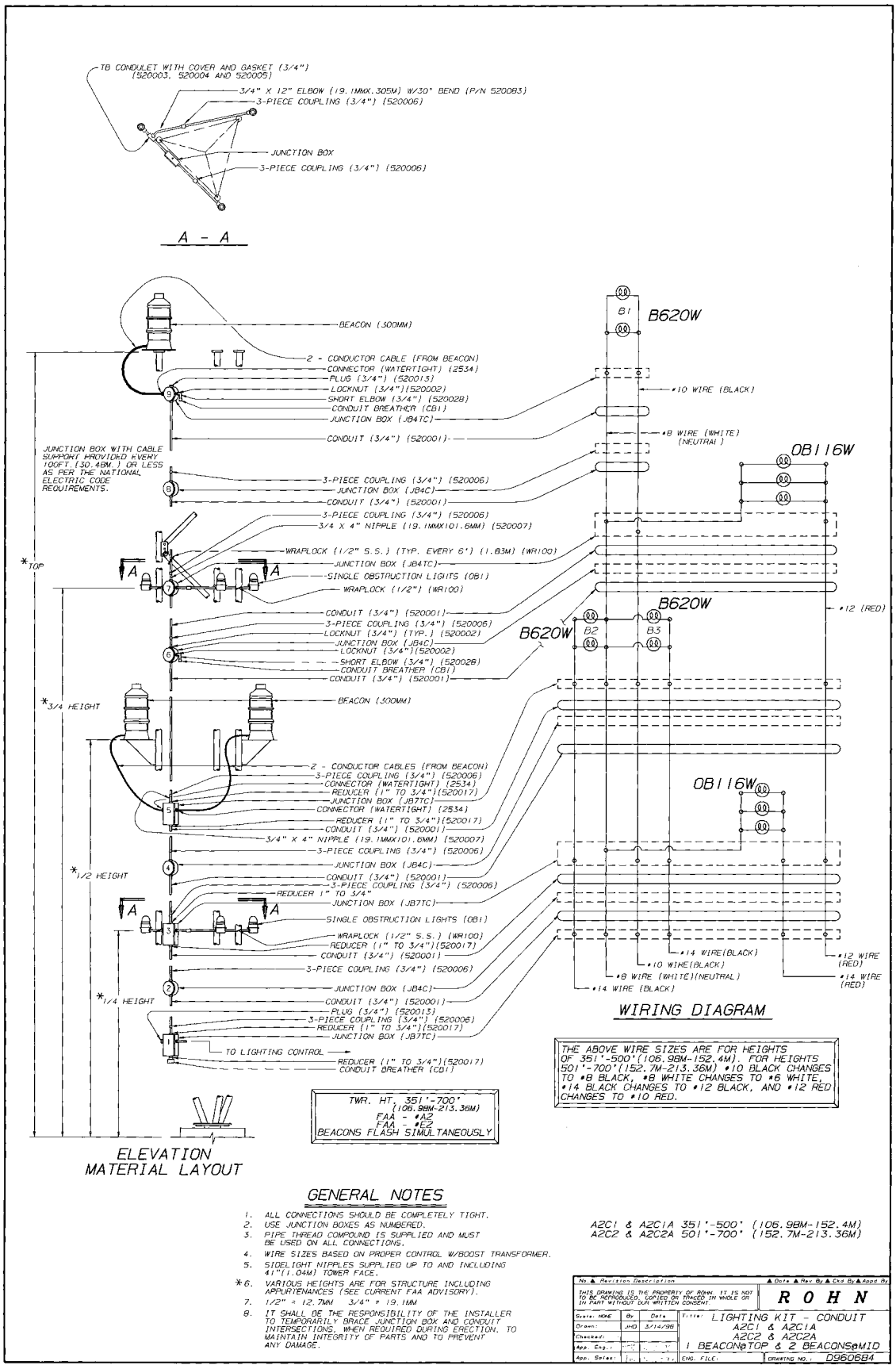
TB CONDULET WITH COVER AND GASKET (3/4")
(520003, 520004 AND 520005)
3/4" X 12" ELBOW (19.1MMX.305M) W/30° BEND (P/N 520083)
3-PIECE COUPLING (3/4") (520006)
JUNCTION BOX
3-PIECE COUPLING (3/4") (520006)
A - A
BEACON (300MM)
2 - CONDUCTOR CABLE (FROM BEACON)
CONNECTOR (WATERTIGHT) (2534)
PLUG (3/4") (520013)
LOCKNUT (3/4")(520002)
SHORT ELBOW (3/4") (520028)
CONDUIT BREATHER (CB1)
JUNCTION BOX (JB4TC)
CONDUIT (3/4") (520001)
JUNCTION BOX WITH CABLE SUPPORT PROVIDED EVERY 100FT.(30.48M.) OR LESS AS PER THE NATIONAL ELECTRIC CODE REQUIREMENTS.
3-PIECE COUPLING (3/4") (520006)
JUNCTION BOX (JB4C)
CONDUIT (3/4") (520001)
3-PIECE COUPLING (3/4") (520006)
3/4 X 4" NIPPLE (19.1MMX101.6MM) (520007)
WRAPLOCK (1/2" S.S.) (TYP. EVERY 6') (1.83M) (WR100)
JUNCTION BOX (JB4TC)
SINGLE OBSTRUCTION LIGHTS (OB1)
WRAPLOCK (1/2") (WR100)
*TOP
CONDUIT (3/4") (520001)
3-PIECE COUPLING (3/4") (520006)
LOCKNUT (3/4") (TYP.) (520002)
JUNCTION BOX (JB4C)
LOCKNUT (3/4")(520002)
SHORT ELBOW (3/4") (520028)
CONDUIT BREATHER (CB1)
CONDUIT (3/4") (520001)
*3/4 HEIGHT
BEACON (300MM)
2 - CONDUCTOR CABLES (FROM BEACON)
3-PIECE COUPLING (3/4") (520006)
CONNECTOR (WATERTIGHT) (2534)
REDUCER (1" TO 3/4")(520017)
JUNCTION BOX (JB7TC)
CONNECTOR (WATERTIGHT) (2534)
REDUCER (1" TO 3/4")(520017)
CONDUIT (3/4") (520001)
3/4" X 4" NIPPLE (19.1MMX101.6MM) (520007)
3-PIECE COUPLING (3/4") (520006)
JUNCTION BOX (JB4C)
*1/2 HEIGHT
CONDUIT (3/4") (520001)
3-PIECE COUPLING (3/4") (520006)
REDUCER 1" TO 3/4"
JUNCTION BOX (JB7TC)
SINGLE OBSTRUCTION LIGHTS (OB1)
WRAPLOCK (1/2" S.S.) (WR100)
REDUCER (1" TO 3/4")(520017)
CONDUIT (3/4") (520001)
3-PIECE COUPLING (3/4") (520006)
JUNCTION BOX (JB4C)
*1/4 HEIGHT
CONDUIT (3/4") (520001)
PLUG (3/4") (520013)
3-PIECE COUPLING (3/4") (520006)
REDUCER (1" TO 3/4")(520017)
JUNCTION BOX (JB7TC)
TO LIGHTING CONTROL
REDUCER (1" TO 3/4")(520017)
CONDUIT BREATHER (CB1)
B1
B620W
#10 WIRE (BLACK)
#8 WIRE (WHITE) (NEUTRAL)
OB116W
B620W
B2
B3
B620W
#12 (RED)
OB116W
#14 WIRE(BLACK)
#10 WIRE(BLACK)
#8 WIRE (WHITE)(NEUTRAL)
#14 WIRE (BLACK)
#12 WIRE (RED)
#14 WIRE (RED)
WIRING DIAGRAM
THE ABOVE WIRE SIZES ARE FOR HEIGHTS OF 351'-500'(106.98M-152.4M). FOR HEIGHTS 501'-700'(152.7M-213.36M) #10 BLACK CHANGES TO #8 BLACK, #8 WHITE CHANGES TO #6 WHITE, #14 BLACK CHANGES TO #12 BLACK, AND #12 RED CHANGES TO #10 RED.
TWR. HT. 351'-700'
(106.98M-213.36M)
FAA - #A2
FAA - #E2
BEACONS FLASH SIMULTANEOUSLY
ELEVATION
MATERIAL LAYOUT
GENERAL NOTES
1. ALL CONNECTIONS SHOULD BE COMPLETELY TIGHT.
2. USE JUNCTION BOXES AS NUMBERED.
3. PIPE THREAD COMPOUND IS SUPPLIED AND MUST BE USED ON ALL CONNECTIONS.
4. WIRE SIZES BASED ON PROPER CONTROL W/BOOST TRANSFORMER.
5. SIDELIGHT NIPPLES SUPPLIED UP TO AND INCLUDING 41"(1.04M) TOWER FACE.
*6. VARIOUS HEIGHTS ARE FOR STRUCTURE INCLUDING APPURTENANCES (SEE CURRENT FAA ADVISORY).
7. 1/2" = 12.7MM 3/4" = 19.1MM
8. IT SHALL BE THE RESPONSIBILITY OF THE INSTALLER TO TEMPORARILY BRACE JUNCTION BOX AND CONDUIT INTERSECTIONS, WHEN REQUIRED DURING ERECTION, TO MAINTAIN INTEGRITY OF PARTS AND TO PREVENT ANY DAMAGE.
A2C1 & A2C1A 351'-500' (105.98M-152.4M)
A2C2 & A2C2A 501'-700' (152.7M-213.36M)
No. Revision Description
Date Rev By Ckd By Appd By
THIS DRAWING IS THE PROPERTY OF ROHN. IT IS NOT TO BE REPRODUCED, COPIED OR TRACED IN WHOLE OR IN PART WITHOUT OUR WRITTEN CONSENT.
ROHN
Scale: NONE
By
Date
Drawn:
JHO
3/14/96
Checked:
App. Eng.:
App. Sales:
Title: LIGHTING KIT - CONDUIT
A2C1 & A2C1A
A2C2 & A2C2A
1 BEACON@TOP & 2 BEACONS@MID
ENG. FILE:
DRAWING NO.: D960684

A2C1A & A2C2A LIGHTING KIT

(with Alarm Unit)
351′ to 700′ w/Conduit

Qty.	Part Number	Description
6	OB1	Single Obstruction Lights
4	JB4C	Junction Boxes
2	JB4TC	Junction Boxes
3	JB7TC	Junction Boxes
3	2534	Water Tight Connectors
6	520017	Reducers 1" to 3/4"
2	520028	Short Elbows 3/4"
3	CB1	Conduit Breathers
12	520006	Erickson Couplings 3/4"
3	520013	Plastic Pipe Plugs 3/4"
2	TB27A	TB Condulets, Gaskets, and Covers 3/4"
3	520031	Conduit Lock Nuts 1/2"
40	520002	Conduit Lock Nuts 3/4"
2	WR100	Cans Stainless Steel Wraplock (1/2" x 100')
2	520023	Cans Joint Compound
50'	530021	#14 Wire (Red)
50'	530023	#14 Wire (White)
5	520007	Conduit Nipples 3/4" x 4"
6	520008	Conduit Nipples 3/4" x 12"
6	520009	Conduit Nipples 3/4" x 18"
4	520062	Pipe Couplers 3/4"
2	520083	Elbows 3/4" x 12" with 30° Bend
1	OBLITECAT	Obstruction Lighting Catalog
1	ULC700	Indoor Alarm Control with Remote Photocell
3	B1R	Beacons w/Red Glass
6	B620W	Beacon Bulbs (120 Volt)
6	OB116W	Obstruction Light Bulbs (120 Volt)
–	530012	#8 Wire (White) (Tower Height Plus 60′)
–	530016	#10 Wire (Black) (Tower Height Plus 60′)
–	530017	#12 Wire (Red) (¾ Tower Height Plus 50′)
–	530021	#14 Wire (Red) (¼ tTower Height Plus 40′)
–	530024	2 – #14 Wire (Black) (½ Tower Height Plus 40′)
–	520001	Rigid Galvanized Conduit ¾″ (Tower Height Plus 10′)
10′	520029	Rigid Galvanized Conduit ½″ (for remote photocell)

The above wire sizes are for tower heights of 351′ to 500′. For heights 501′ to 700′, #8 white (530012) changes to #6 white (530006); #10 black (530016) changes to #8 black (530009); and #12 red (530017) changes to #10 red (530014), and #14 black (530024) changes to #12 black (530018).

Conversion kit may be required on self-supporting towers, depending upon base size, and would consist of required material for installing side lights on varying face width structures. Conversion kit must be ordered as a separate item. Additional information is available upon request.

Note: Wire lengths may vary due to structure height including appurtenances.

Prices and specifications are subject to change without notice.
F.O.B. Peoria, Illinois
See Drawing No. D960684 For Further Details

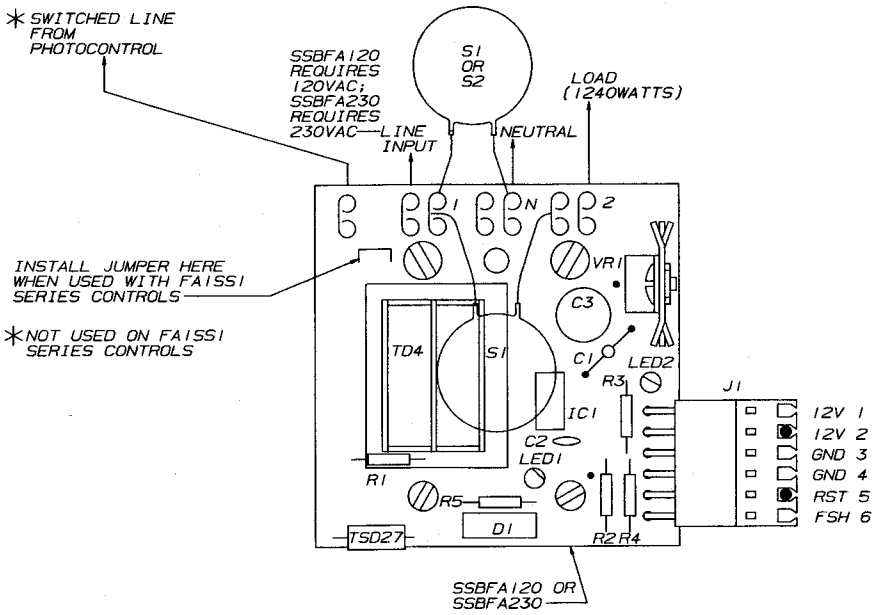

NOTE:

1.) LED 1 INDICATES PROPER OPERATION OF THE POWER SUPPLY.
2.) LED 2 INDICATES PROPER OPERATION OF THE FLASHER CONTROL CIRCUIT.
3.) OUTPUT RELAY 6154H MUST BE MOUNTED TO BARE METAL FOR PROPER HEAT DISSIPATION. (USE HEAT SINK PAD ENCLOSED)
4.) FLASHER CAPACITY IS 1500 VA.
5.) SOLID STATE RELAY WILL NOT SWITCH OFF WITHOUT A MINIMUM LOAD OF 2000 OHM.
6.) FACTORY REPAIR SERVICE AVAILABLE.
7.) SIDE LIGHT CAPACITY IS 1800 VA.

ROHN P/N	REF. NO.	DESCRIPTION & VALUE
	R1	RESISTOR 470 OHM 1/4 WATT
	R2	RESISTOR 470 OHM 1/4 WATT
	R3	RESISTOR 2.2K OHM 1/4 WATT
	R4	RESISTOR 150K OHM 1/4 WATT
	R5	RESISTOR 470 OHM 1/4 WATT
	C1	CAPACITOR 10uf 25WVDC
	C2	CAPACITOR .01uf 50V DISC.
	C3	CAPACITOR 1000uf 25WVDC
510167	VR1	VOLTAGE REGULATOR #MC7812CT 12V+
510204	TD4	TRANSFORMER SPW401S 120V
510205	TD5	TRANSFORMER SPW401D 230V
510172	S1	SUPPRESSOR MOV 150VRMS
510207	S2	SUPPRESSOR MOV 250VRMS
510170	LED1-LED2	RED LIGHT EMITTING DIODE
510168	IC1	TIMER OSCILLATOR 555
510173	D1	BRIDGE RECTIFIER 1.5A 50V
510018	J1	PROGRAM JUMPER
SSBFA120		PC BOARD COMPLETE 120V
SSBFA230		PC BOARD COMPLETE 230V
6154H		RELAY SOLID STATE 40A AT 250VAC
510171	TSD27	SUPPRESSOR 27V 1.5SE27C

NOTE:

ONLY PART NUMBERED (P/N) ITEMS AVAILABLE FROM ROHN INDUSTRIES INC.

No.	Revision Description	Date	Rev By	Ckd By	Appd By
R2	ADDED 230V VERSION	12/30/97	JHD	DC	TS
R1	REDRAWN, WAS C861054	8/26/93	FHT	DC 9-1-93	TS

ROHN

Scale: NONE	By	Date
Drawn:	FHT	8/26/93
Checked:	DC	9/1/93
App. Eng.:	TS	9/2/93
App. Sales:	PM	9/2/93

Title: PICTORIAL LAYOUT FOR SSBFA120 OR SSBFA230

ENG. FILE:

DRAWING NO.: C930988 R2

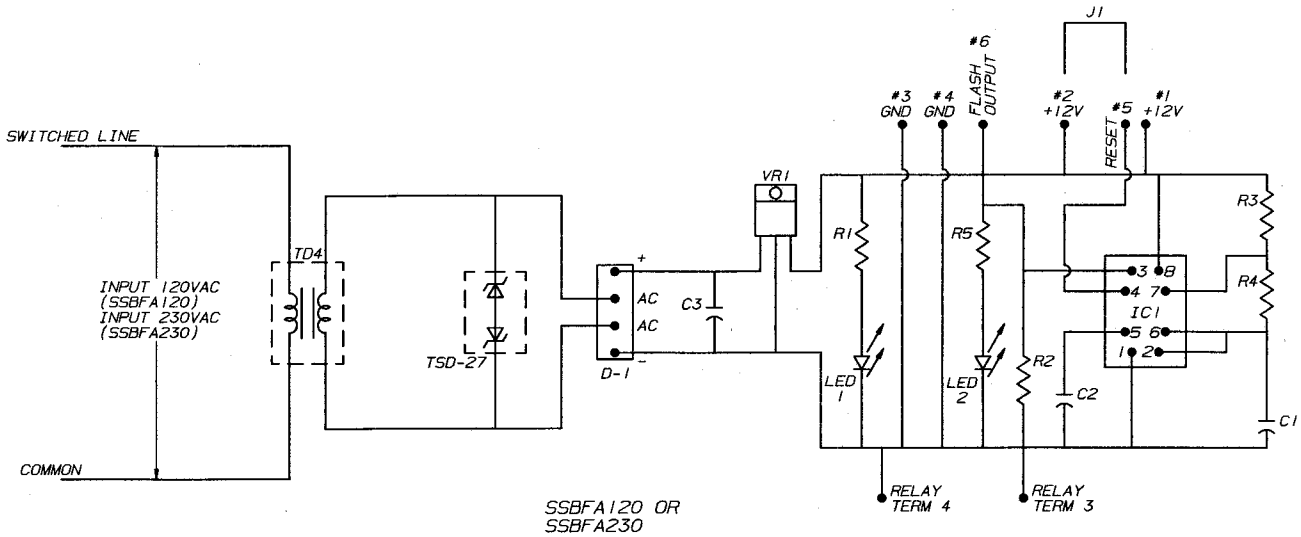

SSBFA120 OR
SSBFA230

ROHN P/N	REF. NO.	DESCRIPTION & VALUE
	R1	RESISTOR 470 OHM 1/4 WATT
	R2	RESISTOR 470 OHM 1/4 WATT
	R3	RESISTOR 2.2K OHM 1/4 WATT
	R4	RESISTOR 150K OHM 1/4 WATT
	R5	RESISTOR 470 OHM 1/4 WATT
	C1	CAPACITOR 10uf 25WVDC
	C2	CAPACITOR .01uf 50V DISC.
	C3	CAPACITOR 1000uf 25WVDC
510167	VR1	VOLTAGE REGULATOR #MC7812CT 12V+
510204	TD4	TRANSFORMER SPW401S 120V
510205	TD5	TRANSFORMER SPW401D 230V
510172	S1	* SUPPRESSOR MOV 150VRMS
510207	S2	* SUPPRESSOR MOV 250VRMS
510170	LED1-LED2	RED LIGHT EMITTING DIODE
510168	IC1	TIMER OSCILLATOR 555
510173	D1	BRIDGE RECTIFIER 1.5A 50V
510018	J1	PROGRAM JUMPER
SSBFA120		PC BOARD COMPLETE 120V
SSBFA230		PC BOARD COMPLETE 230V
6154H		* RELAY SOLID STATE 40A AT 250VAC
510171	TSD27	SUPPRESSOR 27V 1.5SE27C

* - NOT SHOWN ON THIS DRAWING, SEE DRAWING C930988.

NOTE: ONLY PART NUMBERED (P/N) ITEMS AVAILABLE FROM ROHN INDUSTRIES INC.

No.	Revision Description	Date	Rev. By	Ckd By	Appd By
R2	ADDED 230V VERSION	12/18/97	JHD	DC	TS
R1	REDRAWN, WAS C861052	8/20/93	JHD	DC 9/2/93	TS

ROHN

Scale: NONE	By	Date
Drawn:	JHD	8/20/93
Checked:	DC	9/2/93
App. Eng.:	TS	9/2/93
App. Sales:	PM	9/2/93

Title: SCHEMATIC DIAGRAM FOR SSBFA120 OR SSBFA230

ENG. FILE:

DRAWING NO.: C930987 R2

* ON TOWERS WITH 2 BEACONS, THE BEACONS FLASH ALTERNATELY OR TOGETHER, DEPENDING ON THE ORIGINAL TOWER WIRING. TO MAINTAIN COMPLIANCE WITH EITHER TYPE, THIS CONTROL MAY BE CONFIGURED PER THE APPLICATION. FOR SIMULTANEOUS FLASH OPERATION; USE THE HARNESS WITH THE GREEN AND BLACK WIRES. GREEN TO #3 ON K3 AND BLACK ON #4 OF K3. FOR ALTERNATE FLASH OPERATION; USE THE HARNESS WITH THE GREEN AND RED WIRES. GREEN TO #4 ON K3 AND RED TO #3 ON K3.

CONTROL ASSY P/N	DESCRIPTION
FA1SSX1	CONTROL 1CKT FLASHER SOLID STATE 120V WITH OUTDOOR HOUSING
FA1SSX2	CONTROL 1CKT FLASHER SOLID STATE PANEL ONLY 120V
FA2SSX1	CONTROL 2CKT FLASHER SOLID STATE 120V WITH OUTDOOR HOUSING
FA2SSX2	CONTROL 2CKT FLASHER SOLID STATE PANEL ONLY 120V
FA1SSX1P	CONTROL 1CKT FLASHER & PHOTOCONTROL, SOLID STATE 120V WITH OUTDOOR HOUSING
FA1SSX3P	CONTROL 1CKT FLASHER & PHOTOCONTROL, SOLID STATE 120V LESS OUTDOOR HOUSING
FA2SSX1P	CONTROL 2CKT FLASHER & PHOTOCONTROL, SOLID STATE 120V WITH OUTDOOR HOUSING
FA2SSX3P	CONTROL 2CKT FLASHER & PHOTOCONTROL, SOLID STATE 120V LESS OUTDOOR HOUSING
RPHIP	PHOTOCONTROL WITH MOUNTING SOCKET 120V, 1800VA CAPACITY

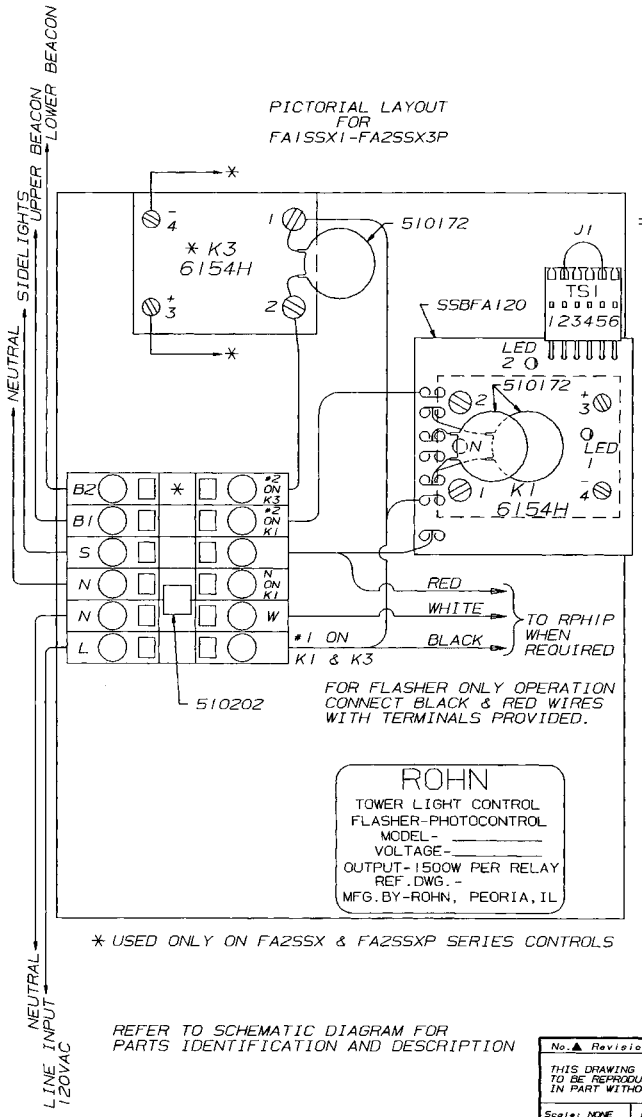

* USED ONLY ON FA2SSX & FA2SSXP SERIES CONTROLS

REFER TO SCHEMATIC DIAGRAM FOR PARTS IDENTIFICATION AND DESCRIPTION

FA1SSX1-FA2SSX3P FEATURES & SPECIFICATIONS

PURPOSE:

FLASHER CONTROL FOR TOWERS WITH 1 OR 2 BEACONS.

SPECIFICATIONS:

FLASHER RATE - 24 FPM +-3 FPM.
POWER INPUT - 108-132VAC (120VAC NOMINAL).
FLASHER OUTPUT - 1500 WATTS INCANDESCENT (PER BEACON).
SIDELIGHT OUTPUT - 1800 WATTS INCANDESCENT.
PHOTOCONTROL TURN ON - BY OTHERS OR RPHIP.

FEATURES:

1.) FLASHER CIRCUIT IS LOW VOLTAGE AND ISOLATED FROM THE POWER LINE.
2.) LIGHT EMITTING DIODES INDICATE OPERATION OF EACH SECTION OF CONTROL CIRCUITRY.
3.) OPTO-ISOLATED SOLID STATE POWER RELAYS PROVIDE ZERO VOLTAGE SWITCHING, LONGER LAMP LIFE AND REDUCED RFI.
4.) TRANSIENT PROTECTION RESPONDS TO UNWANTED DANGEROUS OVERVOLTAGES.
5.) MOST COMPONENTS ARE AVAILABLE AT LOCAL DISTRIBUTORS.
6.) WILL DIRECTLY REPLACE A3/A5SSX1 AND FA1SS SERIES WITH THE SAME MOUNTING HOLES.
7.) SOLID STATE RELAY WILL NOT SWITCH OFF WITHOUT A MINIMUM LOAD OF 2000 OHMS.
8.) LED 1&2 INDICATE PROPER OPERATION OF THE 1-POWER SUPPLY & 2-FLASHER.

No.	Revision Description	Date	Rev By	Ckd By	Appd By

ROHN

Scale: NONE	By	Date
Drawn:	JHD	9/3/93
Checked:	DR	9-20-93
App. Eng.:	HA	9-20-93
App. Sales:	PM	9-20-93

Title: PICTORIAL LAYOUT FOR FA1SSX1-FA2SSX3P

ENG. FILE:

DRAWING NO.: C931016

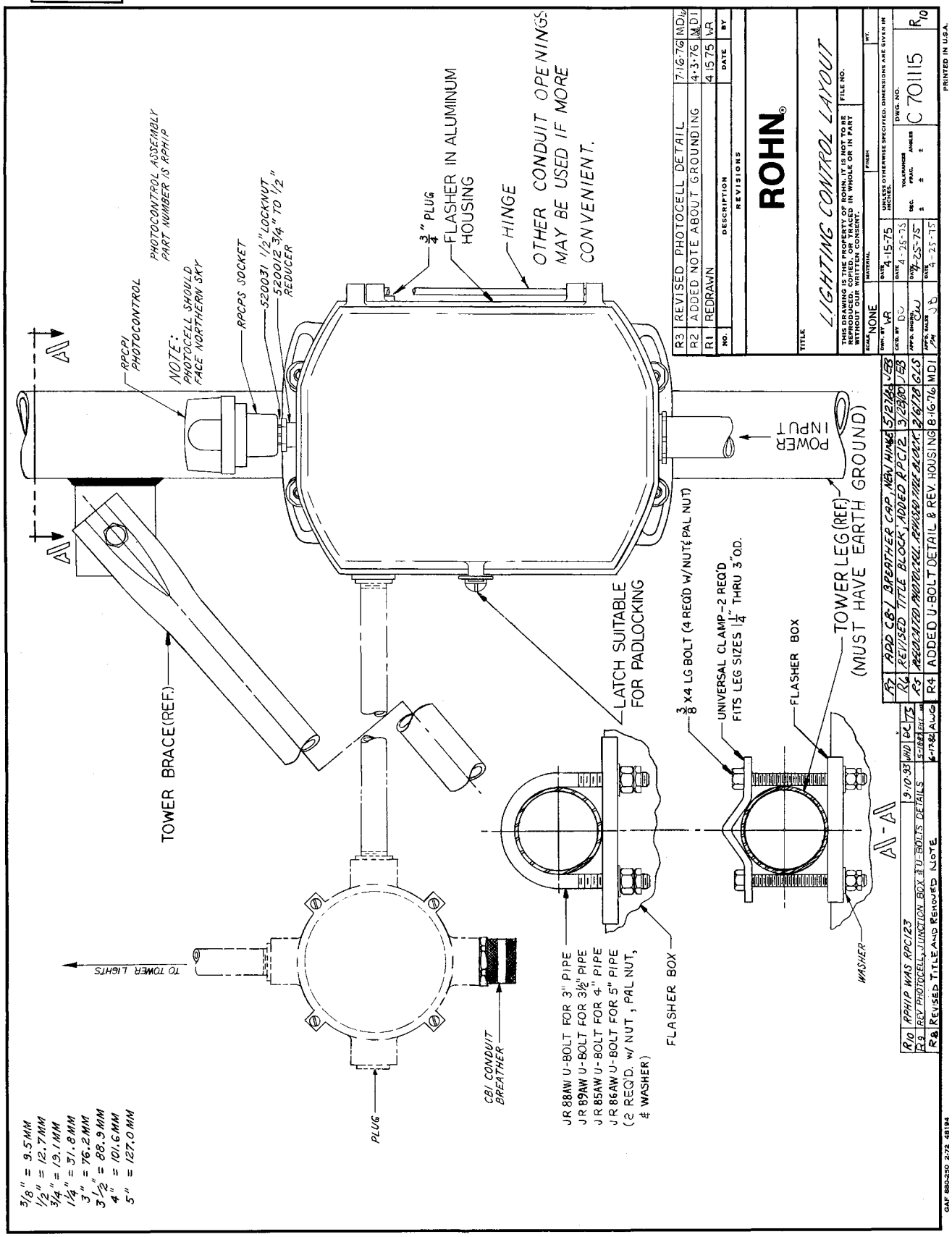
PHOTOCONTROL ASSEMBLY PART NUMBER IS RPHIP
RPCPI PHOTOCONTROL
NOTE: PHOTOCELL SHOULD FACE NORTHERN SKY
RPCPS SOCKET
520031 1/2" LOCKNUT
520012 3/4" TO 1/2" REDUCER
3/4" PLUG
FLASHER IN ALUMINUM HOUSING
HINGE
OTHER CONDUIT OPENINGS MAY BE USED IF MORE CONVENIENT.
POWER INPUT
TOWER BRACE (REF.)
LATCH SUITABLE FOR PADLOCKING
3/8 X 4 LG BOLT (4 REQ'D W/NUT & PAL NUT)
UNIVERSAL CLAMP - 2 REQ'D FITS LEG SIZES 1 1/4" THRU 3" O.D.
FLASHER BOX
TOWER LEG (REF.) (MUST HAVE EARTH GROUND)
A - A
TO TOWER LIGHTS
PLUG
CB1 CONDUIT BREATHER
JR 88AW U-BOLT FOR 3" PIPE
JR 89AW U-BOLT FOR 3 1/2" PIPE
JR 85AW U-BOLT FOR 4" PIPE
JR 86AW U-BOLT FOR 5" PIPE
(2 REQ'D. w/ NUT, PAL NUT, & WASHER)
FLASHER BOX
WASHER
3/8" = 9.5MM
1/2" = 12.7MM
3/4" = 19.1MM
1 1/4" = 31.8MM
3" = 76.2MM
3 1/2" = 88.9MM
4" = 101.6MM
5" = 127.0MM
R10 RPHIP WAS RPC123 9-10-93 WHD
R9 REV PHOTOCELL, JUNCTION BOX & U-BOLTS DETAILS 5-18-87 EHL
R8 REVISED TITLE AND REMOVED NOTE 5-17-82 AWG
R7 ADD CB1 BREATHER CAP, NEW HINGE 5-27-76 JEB
R6 REVISED TITLE BLOCK, ADDED RPC12 3-29-80 JEB
R5 REGULATED PHOTOCELL, REVISED TITLE BLOCK 2-6-78 GLS
R4 ADDED U-BOLT DETAIL & REV. HOUSING 8-16-76 MDI
R3 REVISED PHOTOCELL DETAIL 7-16-76 MDI
R2 ADDED NOTE ABOUT GROUNDING 4-3-76 MDI
R1 REDRAWN 4-15-75 VR
NO. DESCRIPTION DATE BY
REVISIONS
ROHN
TITLE
LIGHTING CONTROL LAYOUT
THIS DRAWING IS THE PROPERTY OF ROHN. IT IS NOT TO BE REPRODUCED OR USED IN WHOLE OR IN PART WITHOUT OUR WRITTEN CONSENT.
FILE NO.
SCALE NONE
MATERIAL
FINISH
WT.
DWN. BY VR DATE 4-15-75
CKD. BY DC DATE 4-25-75
APPD. ENGR. DATE 4-25-75
APPD. SALES JB DATE 4-25-75
UNLESS OTHERWISE SPECIFIED, DIMENSIONS ARE GIVEN IN INCHES.
DEC. ± FRAC. ± ANGLES ±
DWG. NO. C 701115
R10
PRINTED IN U.S.A.
GAF 880-230 2-72 48194

CONTROL ASSY P/N	DESCRIPTION
FA3SSX1P	CONTROL 3CKT FLASHER & PHOTOCONTROL, SOLID STATE 120V WITH OUTDOOR HOUSING
FA3SSX1	CONTROL 3CKT FLASHER SOLID STATE 120V WITH OUTDOOR HOUSING
FA3SSX2	CONTROL 3CKT FLASHER SOLID STATE PANEL ONLY 120V
FA3SSX3	CONTROL 3CKT FLASHER & PHOTOCONTROL, SOLID STATE 120V LESS OUTDOOR HOUSING
RPHIP	PHOTOCONTROL WITH MOUNTING SOCKET 120V, 1800VA CAPACITY

PICTORIAL LAYOUT FOR FA3SSX1P

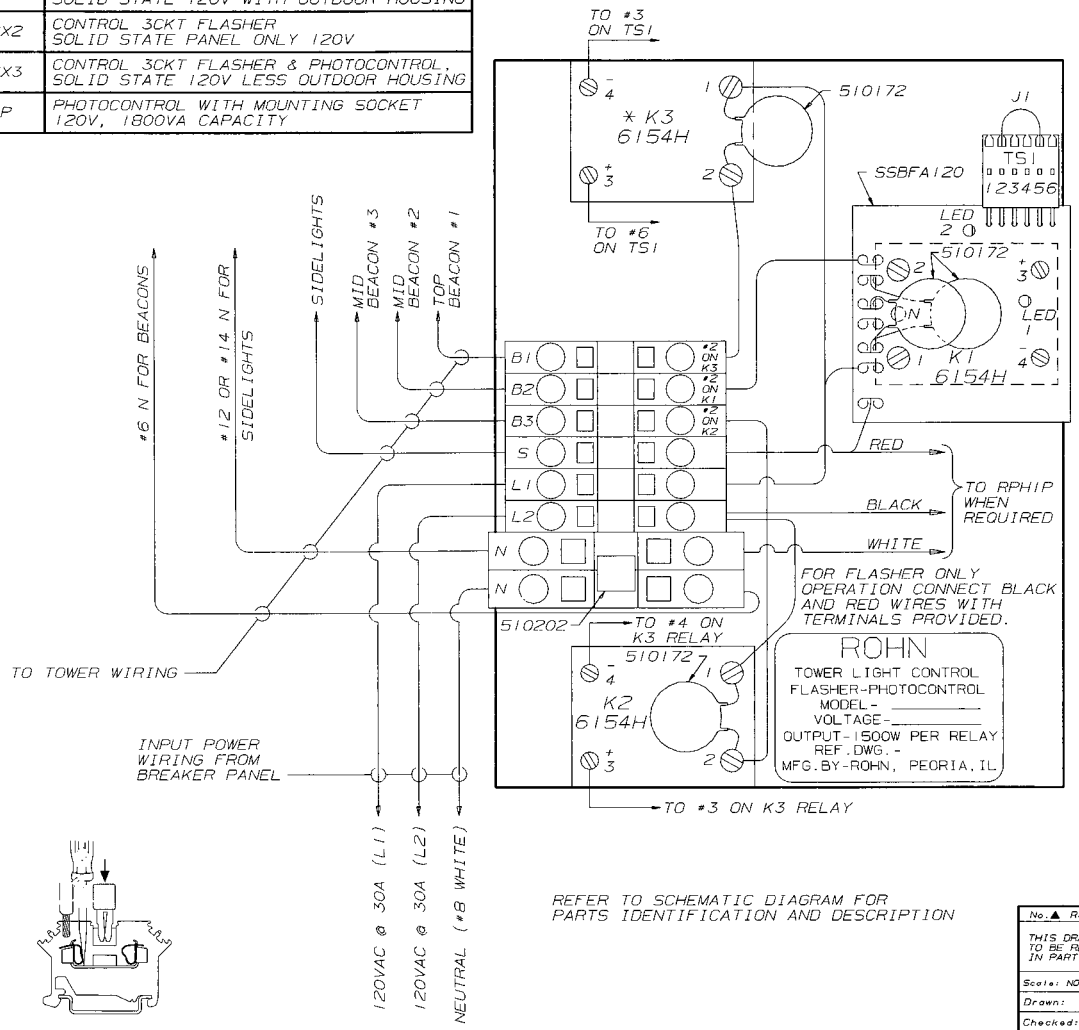

REFER TO SCHEMATIC DIAGRAM FOR PARTS IDENTIFICATION AND DESCRIPTION

FA3SSX1P FEATURES & SPECIFICATIONS

PURPOSE:

FLASHER CONTROL FOR TOWERS WITH 3 BEACONS.

SPECIFICATIONS:

FLASHER RATE - 24 FPM +-3 FPM.
POWER INPUT - 108-132VAC (120VAC NOMINAL).
FLASHER OUTPUT - 1500 WATTS INCANDESCENT (PER BEACON).
SIDELIGHT OUTPUT - 1800 WATTS INCANDESCENT.
PHOTOCONTROL TURN ON - BY OTHERS OR RPHIP.

FEATURES:

1.) FLASHER CIRCUIT IS LOW VOLTAGE AND ISOLATED FROM THE POWER LINE.
2.) LIGHT EMITTING DIODES INDICATE OPERATION OF EACH SECTION OF CONTROL CIRCUITRY.
3.) OPTO-ISOLATED SOLID STATE POWER RELAYS PROVIDE ZERO VOLTAGE SWITCHING, LONGER LAMP LIFE AND REDUCED RFI.
4.) TRANSIENT PROTECTION RESPONDS TO UNWANTED DANGEROUS OVERVOLTAGES.
5.) MOST COMPONENTS ARE AVAILABLE AT LOCAL DISTRIBUTORS.
6.) WILL DIRECTLY REPLACE A3/A5SSX1 AND FA1SS SERIES WITH THE SAME MOUNTING HOLES.
7.) SOLID STATE RELAY WILL NOT SWITCH OFF WITHOUT A MINIMUM LOAD OF 2000 OHMS.
8.) LED 1&2 INDICATE PROPER OPERATION OF THE 1-POWER SUPPLY & 2-FLASHER.

No. ▲ Revision Description	▲ Date	▲ Rev By	▲ Ckd By	▲ Appd By

R O H N

Scale: NONE	By	Date
Drawn:	JHD	1/25/94
Checked:	JC	1-26-94
App. Eng.:	TS	1-26-94
App. Sales:	PM	1-26-94

Title: PICTORIAL LAYOUT FOR FA3SSX1P

ENG. FILE:

DRAWING NO.: C940639

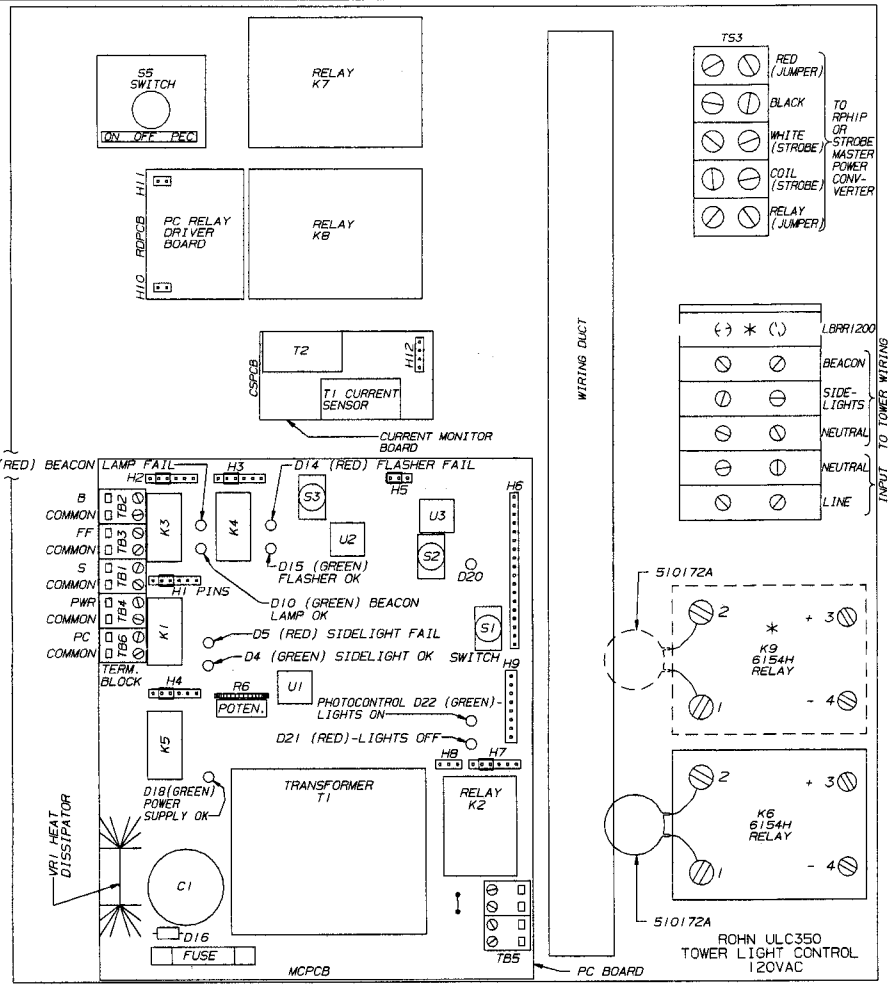

MODEL ULC350 RED LIGHT CONTROLLER INSTALLATION DETAILS & SPECIFICATIONS

THE ULC350 IS A UNIVERSAL RED LIGHT CONTROL SUITABLE FOR OPERATION AS A RED ONLY CONTROLLER, OR IN CONJUNCTION WITH A STROBE FOR DUAL TOWER LIGHTING ON TOWERS LESS THAN 350'AGL. FEATURES AND SPECIFICATIONS ARE AS FOLLOWS.

1) ALL ALARM OUTPUTS MAY BE CONFIGURED AS N/O OR N/C BY SIMPLY MOVING A FIELD SELECTABLE JUMPER.
2) ALL ALARM COMMONS ARE AVAILABLE TO THE USER FOR USE WITH DISCRETE ALARM CHANNELS OR, ALL ALARMS MAY BE DAISY-CHAINED TO MONITOR ALL FUNCTIONS WITH ONE(1) ALARM CHANNEL (N/C, N/O).
3) TEST SWITCHES FACILITATE TESTING OF EACH ALARM, AND RED-GREEN LIGHT EMMITING DIODES PROVIDE FOR INSTANT VISUAL INDICATION OF ALL ALARM FUNCTIONS. NO NEED TO VERIFY EACH ALARM WITH EXTERNAL TEST EQUIPMENT.
4) TRANSIENT OVER VOLTAGE PROTECTION IS PROVIDED ON THE PC BOARD, SOLID STATE RELAY, AND PHOTOCONTROL, THROUGH OPTO-ISOLATION, TORRIOD TRANSFORMERS, MOV'S AND SOLID STATE SUPPRESSORS.
5) ALL ALARM FUNCTION ARE FAILSAFE AND PROVIDE FOR THE FOLLOWING.
   a. PHOTO-CONTROL ON-OFF VERIFICATION.
   b. AC/PCB POWER SUPPLY VERIFICATION.
   c. SIDELIGHT LAMP OUT INDICATION (FIELD ADJUSTABLE).
   d. FLASHER FAIL INDICATION WITH AUTOMATIC BEACON ON IF FLASHER CIRCUIT FAILS.
   e. FIELD PROGRAMMABLE BEACON LAMP OUT INDICATION TO INDICATE FAILURE OF 1 OF 2 BEACON LAMPS OR 2 OF 2 BEACON LAMPS.
6) MANUAL OVERRIDE SWITCH FOR ON-OFF-PEC OPERATION TO FACILITATE SERVICING, TESTING, AND TROUBLE SHOOTING.
7) ALL ALARMS ARE PRESET TO CLOSE ON FAIL. REFER TO SERVICE MANUAL FOR PART NUMBERS, THEORY OF OPERATION AND LOCATION OF PROGRAMMING JUMPERS.
8) K9 USED ON LBRR1200 EQUIPPED MODELS ONLY.

FIELD CALIBRATION PROCEDURE

SIDELIGHT ALARM CALIBRATION IS REQUIRED FOR PROPER OPERATION OF THE SIDELIGHT ALARM CIRCUIT. NOTE: RED LEDS INDICATE ALARM CONDITIONS, GREEN LEDS INDICATE SYSTEM OK.

1) FLIP S5 TO THE ON POSITION (S1, 2 & 3 DOWN).
2) D22 SHOULD NOW BE ON TO INDICATE TOWER LIGHTS ARE ON AND D20 SHOULD BE FLASHING.
3) ROTATE R6 CW AS VIEWED FROM THE TOP UNTIL RED LED D5 COMES ON. (THE SIDE-LIGHT CIRCUIT MUST HAVE 2-OB116W'S TO CLEAR THE ALARM, AND WILL WORK WITH UP TO 6-OB116W'S.) SLOWLY ROTATE R6 CCW UNTIL THE RED D5 GOES OFF AND THE GREEN D4 COMES ON. FLIP S1 UP TO SIMULATE A SIDELIGHT FAILURE AND WATCH FOR D4 TO TURN OFF & D5 TO COME ON. NOTE THE TIME DELAY FROM ON TO OFF & VICE VERSA. CONTINUE TO ROTATE R6 WHILE FLIPPING S1 UNTIL THE TIME DELAY APPEARS EQUAL FROM ON TO OFF & VICE VERSA. RETURN S1 TO THE DOWN POSITION. CALIBRATION COMPLETE.

FIELD TEST PROCEDURE

SIDELIGHT LAMP OUT

1. TEST SIDELIGHT CIRCUIT PER ABOVE CALIBRATION PROCEDURE.

BEACON LAMP OUT

1. FLIP S5 TO THE ON POSITION.
2. WITH S3 DOWN AND 2-GOOD B620W LAMPS IN THE BEACON, THE GREEN LED D10 SHOULD BE ON.
3. FLIP S3 UP TO SIMULATE A BAD BEACON LAMP.
4. AFTER A SHORT DELAY THE GREEN LED D10 SHOULD GO OFF AND THE RED LED D8 SHOULD COME ON INDICATING AN ALARM CONDITION.
5) FLIP S3 DOWN, AND THE GREEN LED D10 SHOULD COME BACK ON AND THE RED LED D8 SHOULD GO OFF. TEST COMPLETE.

FLASHER FAIL TEST

1) S5 IS STILL IN THE ON POSITION.
2) NOTE THAT D20 IS FLASHING AND WHEN S2 IS FLIPPED UP D20 GOES OUT. THE FLASHER HAS NOW STOPPED AND AFTER A SHORT DELAY THE GREEN LED D15 SHOULD GO OFF, AND THE RED LED D14 SHOULD COME ON INDICATING A FLASHER FAIL ALARM. RELAY K8 WILL ALSO DE-ENERGIZE AND TURN THE BEACON ON STEADY. TO RESET THE ALARM, FLIP S5 TO THE OFF POSITION AND FLIP S2 BACK TO THE DOWN POSITION. RETURN S5 TO THE PEC POSITION TO RESUME NORMAL OPERATION. TEST COMPLETE.

ULC350	COMPLETE CONTROL
ULC350PNL	LESS HSG & PHOTOCONTROL
ULC350NEMA4	W/NEMA4 OUTDOOR HOUSING
ULC350LPC	LESS PHOTOCONTROL

No.	Revision Description	Date	Rev. By	Ckd By	Appd By
R3	REDESIGNED	8/18/97	JHD	DC	TS
R2	MOVED TERMINAL BLOCKS	8/18/95	JHD	DC	TS
R1	REVISED JUMPER AND SWITCH NOTES	11/14/94	JHD	DC	TS

ROHN

Scale: NONE	By	Date
Drawn:	JHD	10/19/94
Checked:	DC	10/21/94
App. Eng.:	TS	10/21/94
App. Sales:	SAK	10/21/94

Title: PICTORIAL LAYOUT FOR ULC350

ENG. FILE:

DRAWING NO.: C941430R3

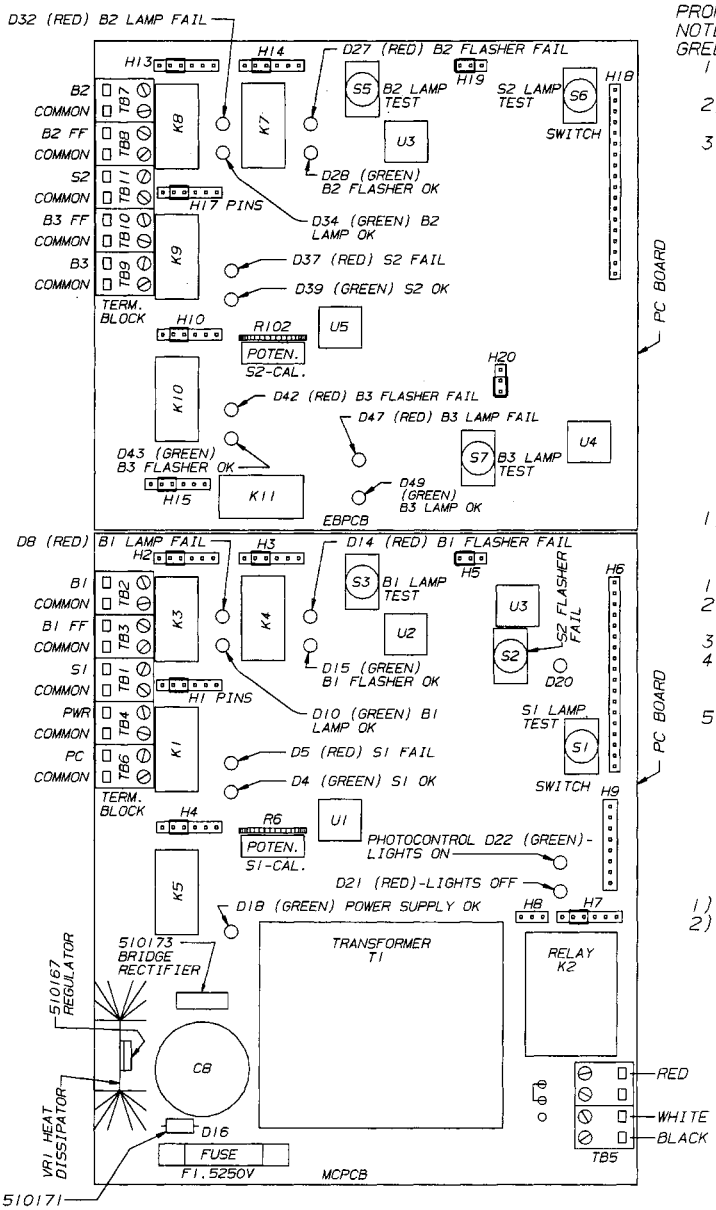

FIELD CALIBRATION PROCEDURE

SIDELIGHT ALARM CALIBRATION IS REQUIRED FOR PROPER OPERATION OF THE SIDELIGHT ALARM CIRCUIT. NOTE: RED LEDS INDICATE ALARM CONDITIONS, GREEN LEDS INDICATE SYSTEM OK.

1) FLIP S8 TO THE ON POSITION (S1, 2, 3, 5, 6, & 7 DOWN).
2) D22 SHOULD NOW BE ON TO INDICATE TOWER LIGHTS ARE ON, AND D20 SHOULD BE FLASHING.
3) FOR THE UPPER SIDELIGHTS, ROTATE R6 CW AS VIEWED FROM THE TOP UNTIL RED LED D5 COMES ON. (THE SIDELIGHT CIRCUIT MUST HAVE 2-OB116W'S TO CLEAR THE ALARM, AND WILL WORK WITH UP TO 6-OB116W'S.) SLOWLY ROTATE R6 CCW UNTIL THE RED D5 GOES OFF AND THE GREEN D4 COMES ON. FLIP S1 UP TO SIMULATE A SIDELIGHT FAILURE AND WATCH FOR D4 TO TURN OFF AND D5 TO COME ON. NOTE THE TIME DELAY FROM ON TO OFF AND VICE VERSA. CONTINUE TO ROTATE R6 WHILE FLIPPING S1 UNTIL THE TIME DELAY APPEARS EQUAL FROM ON TO OFF AND VICE VERSA. RETURN S1 TO THE DOWN POSITION. REPEAT THE ABOVE PROCEDURE FOR THE LOWER SIDELIGHTS USING R102 AND S6, D37 AND D39.

FIELD TEST PROCEDURE

SIDELIGHT LAMP OUT

1) TEST SIDELIGHT CIRCUIT PER ABOVE CALIBRATION PROCEDURE.

BEACON LAMP OUT (B1)

1) FLIP S8 TO THE ON POSITION.
2) WITH S3 DOWN AND 2-GOOD B620W LAMPS IN THE BEACON, THE GREEN LED D10 SHOULD BE ON.
3) FLIP S3 UP TO SIMULATE A BAD BEACON LAMP.
4) AFTER A SHORT DELAY THE GREEN LED D10 SHOULD GO OFF AND THE RED LED D8 SHOULD COME ON INDICATING AN ALARM CONDITION.
5) FLIP S3 DOWN, AND THE GREEN LED D10 SHOULD COME BACK ON AND THE RED LED D8 SHOULD GO OFF. REPEAT THE ABOVE PROCEDURE FOR B2 AND B3 USING S5, D32, D34 FOR B2 AND S7, D47 AND D49 FOR B3.

TEST COMPLETE.

FLASHER FAIL TEST

1) S8 IS STILL IN THE ON POSITION.
2) NOTE THAT D20 IS FLASHING AND WHEN S2 IS FLIPPED UP D20 GOES OUT. THE FLASHER HAS NOW STOPPED AND AFTER A SHORT DELAY THE GREEN LED D15 SHOULD GO OFF, AND THE RED LED D14 SHOULD COME ON INDICATING A FLASHER FAIL ALARM FOR B1. RELAY K14 WILL ALSO DE-ENERGIZE AND TURN THE B1 BEACON ON STEADY. ALSO NOTE THAT GREEN D28 AND D43 TURN OFF AND RED D27 AND D42 TURN ON INDICATING B2 AND B3 HAVE STOPPED FLASHING. K15 (FOR B2) AND K16 (FOR B3) WILL DE-ENERGIZE AND TURN BOTH BEACONS ON STEADY. TO RESET THE ALARM, FLIP S8 TO THE OFF POSITION AND FLIP S2 BACK TO THE DOWN POSITION. RETURN S8 TO THE PEC POSITION TO RESUME NORMAL OPERATION. TEST COMPLETE.

APPLICATION NOTES

1) PRIOR TO ACTIVATING THE CONTROL, VERIFY THE TOWER WIRING IS CORRECT BY DIRECTLY CONNECTING EACH CIRCUIT TO THE INPUT POWER WIRING. THIS WILL ALSO SHOW ANY SHORTS THAT MAY BE ON THE TOWER.
2) CURRENT REQUIREMENTS ARE AS FOLLOWS. THIS MAY BE CHECKED WITH A CLAMP ON AMMETER.
   A. B1, B2 & B3 WILL EACH PULL APPROXIMATELY 10A EACH. IF ANY BEACON CIRCUIT ONLY DRAWS 5 AMPS, THEN 1 OF THE 2-B620W LAMPS IS BURNED OUT. A CURRENT DRAW HIGHER THAN 10 AMPS PER CIRCUIT INDICATES A SHORT OR IMPROPER TOWER WIRING.
   B. S1 AND S2 SHOULD EACH DRAW APPROXIMATELY 3 AMPS EACH. REPAIR ANY TOWER OR LAMP PROBLEMS BEFORE WIRING THE CONTROL INTO THE CIRCUIT.
3) IF THE CONTROL HAS BEEN OPERATING CORRECTLY AND THEN INDICATES A BEACON LAMP ALARM, THERE IS A SIMPLE CHECK THAT CAN BE MADE TO DETERMINE IF THE PROBLEM IS IN THE CONTROL OR ON THE TOWER, IF A CLAMP ON AMMETER IS NOT AVAILABLE.
   A. SWITCH S8 TO THE ON POSITION. IF B1 SHOWS A BAD BEACON LAMP(D8 ON), MOVE THE JUMPER ON H5 ONE POSITION TO THE RIGHT. IF THE ALARM CLEARS (D10 ON) THEN ONE LAMP IS BURNED OUT. IF IT DOES NOT CLEAR, THEN EITHER BOTH LAMPS ARE BAD, OR THERE IS A PROBLEM IN THE CONTROL. REPEAT THE ABOVE PROCEDURE FOR B2 USING H19 & B3 USING H20.
   B. TO DETERMINE IF BOTH BEACON LAMPS ARE BAD, REMOVE ALL POWER FROM THE CONTROL AND MEASURE ACROSS EACH LAMP CIRCUIT WITH AN OHMMETER, ON LOW OHMS SCALE (B1 TO N, B2 TO N, ETC.). ABOUT 10 OHMS OR LESS INDICATES A GOOD LAMP IN THE CIRCUIT. AN OPEN READING OR INFINITY INDICATES THERE ARE NO GOOD LAMPS IN THAT CIRCUIT.
   C. WITH THE POWER STILL OFF, TO CHECK FOR A SHORTED SOLID STATE RELAY, MEASURE ACROSS TERMINALS #1 AND 2 OF RELAYS K6-(B1), K12-(B2), AND K13-(B3). A SHORT OR ZERO OHMS INDICATES A BAD SOLID STATE RELAY OR SUPPRESSOR. PULL ONE LEG OF THE SUPPRESSOR TO DETERMINE WHICH ONE IS BAD. IF ADDITIONAL INFORMATION IS NEEDED, CONTACT THE ROHN LIGHTING DEPARTMENT FOR TECHNICAL ASSISTANCE.

No. ▲ Revision Description	▲ Date	▲ Rev By	▲ Ckd By	▲ Appd By

ROHN

Scale: NONE	By	Date	Title: PICTORIAL LAYOUT FOR ULC700 PC BOARDS
Drawn:	JHD	8/15/95	
Checked:	DC	10-12-95	
App. Eng.:	HA	10-12-95	
App. Sales:	PM	10-12-95	ENG. FILE: / DRAWING NO.: C951320

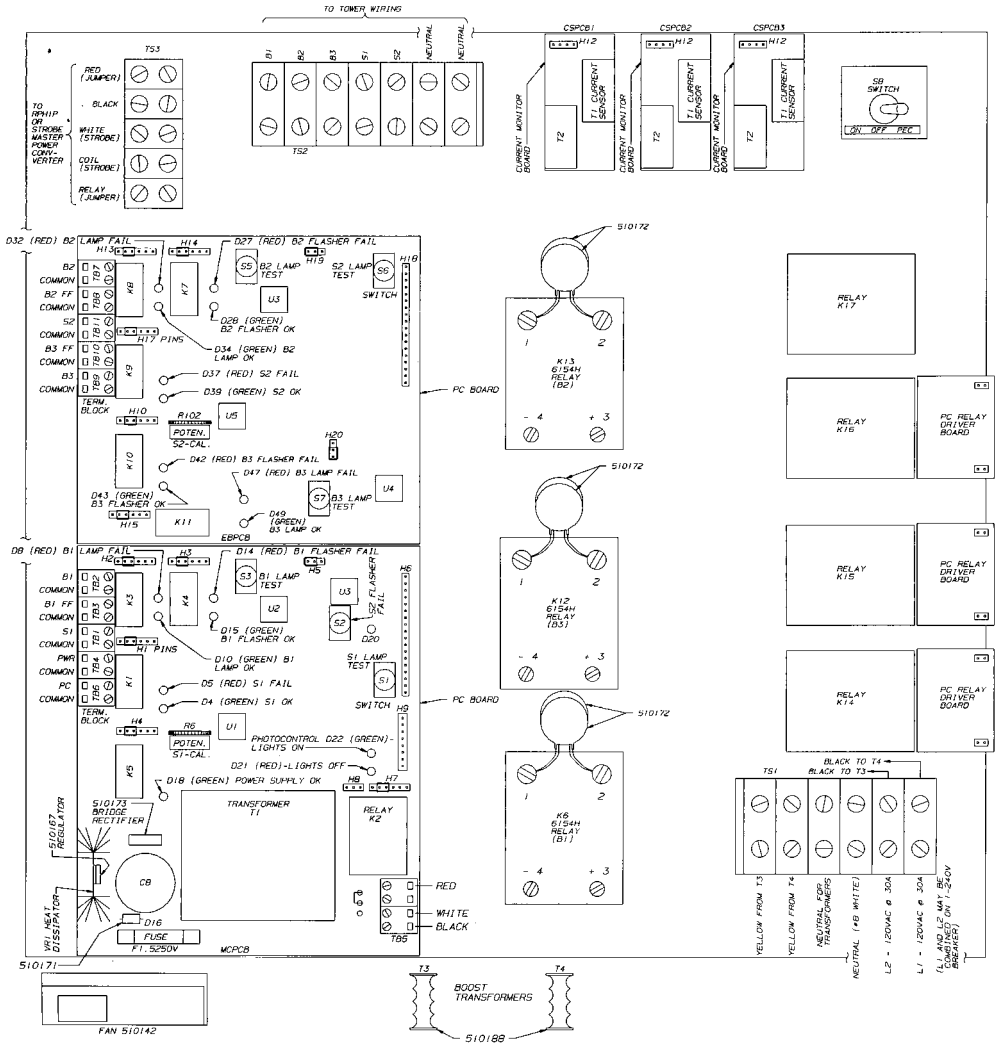

MODEL ULC700 RED LIGHT CONTROLLER INSTALLATION DETAILS & SPECIFICATIONS

THE ULC700 IS A UNIVERSAL RED LIGHT CONTROL SUITABLE FOR OPERATION AS A RED ONLY CONTROLLER, OR IN CONJUNCTION WITH A STROBE FOR DUAL TOWER LIGHTING ON TOWERS FROM 351' TO 700'AGL. FEATURES AND SPECIFICATIONS ARE AS FOLLOWS.

1) ALL ALARM OUTPUTS MAY BE CONFIGURED AS N/O OR N/C BY SIMPLY MOVING A FIELD SELECTABLE JUMPER.
2) ALL ALARM COMMONS ARE AVAILABLE TO THE USER FOR USE WITH DISCRETE ALARM CHANNELS OR, ALL ALARMS MAY BE DAISY-CHAINED TO MONITOR ALL FUNCTIONS WITH ONE(1) ALARM CHANNEL (N/C, N/O).
3) TEST SWITCHES FACILITATE TESTING OF EACH ALARM, AND RED-GREEN LIGHT EMMITING DIODES PROVIDE FOR INSTANT VISUAL INDICATION OF ALL ALARM FUNCTIONS. NO NEED TO VERIFY EACH ALARM WITH EXTERNAL TEST EQUIPMENT.
4) TRANSIENT OVER VOLTAGE PROTECTION IS PROVIDED ON THE PC BOARD, SOLID STATE RELAY, AND PHOTOCONTROL, THROUGH OPTO-ISOLATION, TORRIOD TRANSFORMERS, MOV'S AND SOLID STATE SUPPRESSORS.
5) ALL ALARM FUNCTION ARE FAILSAFE AND PROVIDE FOR THE FOLLOWING.
   a. PHOTO-CONTROL ON-OFF VERIFICATION.
   b. AC-PCB POWER SUPPLY VERIFICATION.
   c. SIDELIGHT LAMP OUT INDICATION (FIELD ADJUSTABLE).
   d. FLASHER FAIL INDICATION WITH AUTOMATIC BEACON ON IF FLASHER CIRCUIT FAILS.
   e. FIELD PROGRAMMABLE BEACON LAMP OUT INDICATION TO INDICATE FAILURE OF 1 OF 2 BEACON LAMPS OR 2 OF 2 BEACON LAMPS, FOR EACH BEACON (3).
6) MANUAL OVERRIDE SWITCH FOR ON-OFF-PEC OPERATION TO FACILITATE SERVICING, TESTING, AND TROUBLE SHOOTING.
7) ALL ALARMS ARE PRESET TO CLOSE ON FAIL. REFER TO SERVICE MANUAL FOR PART NUMBERS, THEORY OF OPERATION AND LOCATION OF PROGRAMMING JUMPERS.

FIELD CALIBRATION PROCEDURE

SIDELIGHT ALARM CALIBRATION IS REQUIRED FOR PROPER OPERATION OF THE SIDELIGHT ALARM CIRCUIT. NOTE: RED LEDS INDICATE ALARM CONDITIONS, GREEN LEDS INDICATE SYSTEM OK.

1) FLIP S8 TO THE ON POSITION (S1, 2, 3, 5, 6, & 7 DOWN).
2) D22 SHOULD NOW BE ON TO INDICATE TOWER LIGHTS ARE ON AND D20 SHOULD BE FLASHING.
3) FOR THE UPPER SIDELIGHTS, ROTATE R6 CW AS VIEWED FROM THE TOP UNTIL RED LED D5 COMES ON. (THE SIDE-LIGHT CIRCUIT MUST HAVE 2-OB116W'S TO CLEAR THE ALARM, AND WILL WORK WITH UP TO 6-OB116W'S.) SLOWLY ROTATE R6 CCW UNTIL THE RED D5 GOES OFF AND THE GREEN D4 COMES ON. FLIP S1 UP TO SIMULATE A SIDELIGHT FAILURE AND WATCH FOR D4 TO TURN OFF & D5 TO COME ON. NOTE THE TIME DELAY FROM ON TO OFF & VICE VERSA. CONTINUE TO ROTATE R6 WHILE FLIPPING S1 UNTIL THE TIME DELAY APPEARS EQUAL FROM ON TO OFF & VICE VERSA. RETURN S1 TO THE DOWN POSITION. REPEAT THE ABOVE PROCEDURE FOR THE LOWER SIDELIGHTS USING R102 AND S6, D37 & D39.

FIELD TEST PROCEDURE

SIDELIGHT LAMP OUT

1) TEST SIDELIGHT CIRCUIT PER ABOVE CALIBRATION PROCEDURE.

BEACON LAMP OUT (B1)

1) FLIP S8 TO THE ON POSITION.
2) WITH S3 DOWN AND 2-GOOD B620W LAMPS IN THE BEACON, THE GREEN LED D10 SHOULD BE ON.
3) FLIP S3 UP TO SIMULATE A BAD BEACON LAMP.
4) AFTER A SHORT DELAY THE GREEN LED D10 SHOULD GO OFF AND THE RED LED D8 SHOULD COME ON INDICATING AN ALARM CONDITION.
5) FLIP S3 DOWN, AND THE GREEN LED D10 SHOULD COME BACK ON AND THE RED LED D8 SHOULD GO OFF. REPEAT THE ABOVE PROCEDURE FOR B2 & B3 USING S5, D32, D34 FOR B2 AND S7, D47 & D49 FOR B3.

TEST COMPLETE.

FLASHER FAIL TEST

1) S8 IS STILL IN THE ON POSITION.
2) NOTE THAT D20 IS FLASHING AND WHEN S2 IS FLIPPED UP D20 GOES OUT. THE FLASHER HAS NOW STOPPED AND AFTER A SHORT DELAY THE GREEN LED D15 SHOULD GO OFF, AND THE RED LED D14 SHOULD COME ON INDICATING A FLASHER FAIL ALARM FOR B1. RELAY K14 WILL ALSO DE-ENERGIZE AND TURN THE B1 BEACON ON STEADY. ALSO NOTE THAT GREEN D28 AND D43 TURN OFF AND RED D27 AND D42 TURN ON INDICATING B2 AND B3 HAVE STOPPED FLASHING. K15 (FOR B2) AND K16 (FOR B3) WILL DE-ENERGIZE AND TURN BOTH BEACONS ON STEADY. TO RESET THE ALARM, FLIP S8 TO THE OFF POSITION AND FLIP S2 BACK TO THE DOWN POSITION. RETURN S8 TO THE PEC POSITION TO RESUME NORMAL OPERATION. TEST COMPLETE.

ULC700	COMPLETE CONTROL
ULC700PNL	LESS HSG & PHOTOCONTROL
ULC700NEMA4	W/NEMA4 OUTDOOR HOUSING
ULC700LPC	LESS PHOTOCONTROL

R1	ADDED BEAC. REFER TO RELAYS & UPDATED DWG.	3/8/96	JKD	DC	JC
No.	Revision Description	Date	Dwn By	Chk By	Appd By

THIS DRAWING IS THE PROPERTY OF ROHN, IT IS NOT TO BE REPRODUCED, COPIED OR TRACED IN WHOLE OR IN PART WITHOUT OUR WRITTEN CONSENT.

ROHN

Scale: NONE	By	Date
Drawn:	JKD	6/26/95
Checked:	DC	8/23/95
App. Eng.:	TS	8/23/95
App. Cust.:	JC	8/23/95

Title: PICTORIAL LAYOUT FOR ULC700

ENG. FILE:

DRAWING NO.: D950891R1

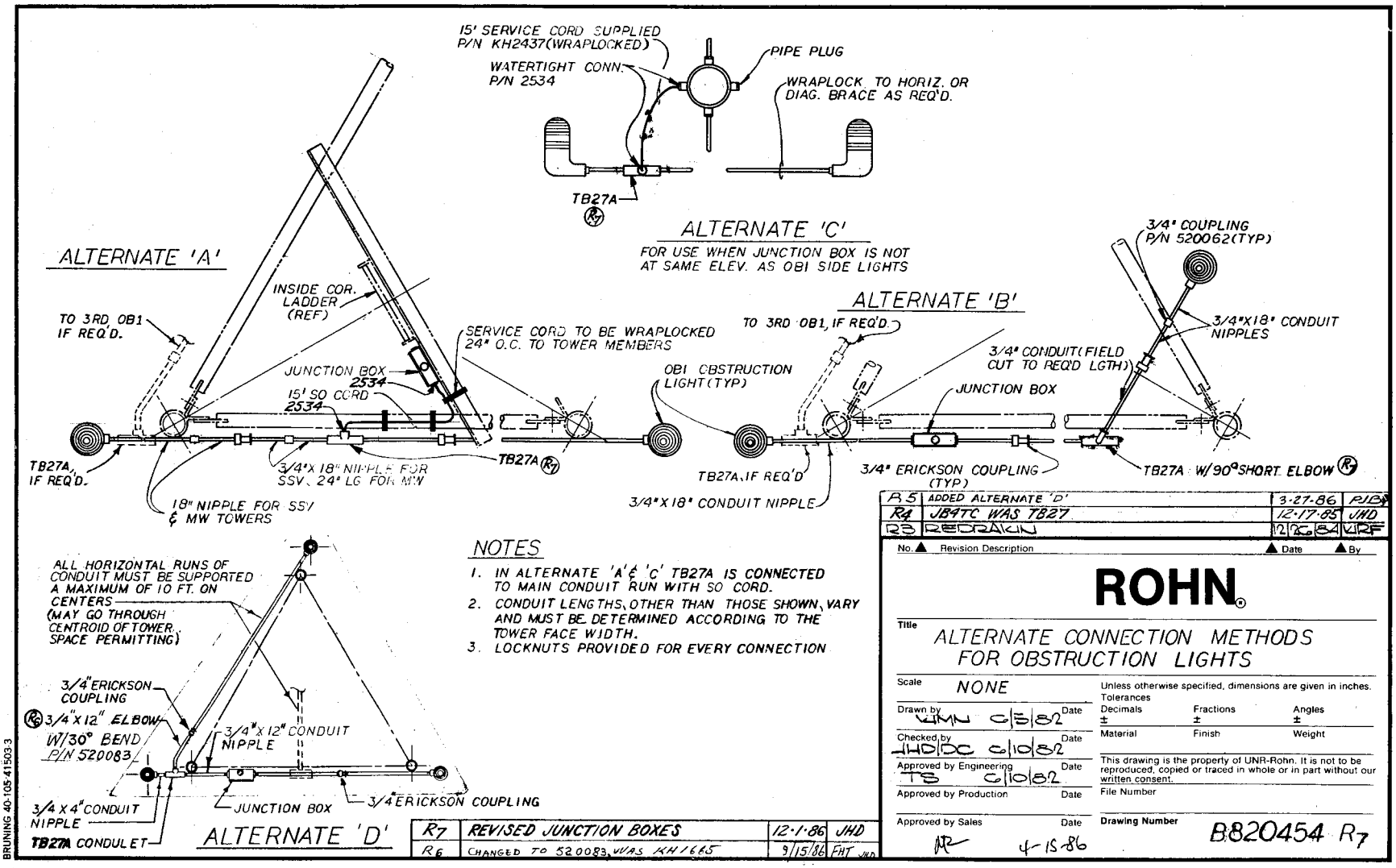

NOTES

1. IN ALTERNATE 'A' & 'C' TB27A IS CONNECTED TO MAIN CONDUIT RUN WITH SO CORD.
2. CONDUIT LENGTHS, OTHER THAN THOSE SHOWN, VARY AND MUST BE DETERMINED ACCORDING TO THE TOWER FACE WIDTH.
3. LOCKNUTS PROVIDED FOR EVERY CONNECTION

No.	Revision Description	Date	By
R5	ADDED ALTERNATE 'D'	3-27-86	PJB
R4	JB4TC WAS TB27	12-17-85	JHD
R3	REDRAWN	12/26/84	VRF
R7	REVISED JUNCTION BOXES	12-1-86	JHD
R6	CHANGED TO 520083, WAS KH1665	9/15/86	FHT JHD

ROHN

Title: ALTERNATE CONNECTION METHODS FOR OBSTRUCTION LIGHTS

Scale: NONE

Drawn by: WMN 6/5/82 Date

Checked by: JHD/DC 6/10/82 Date

Approved by Engineering: TB 6/10/82 Date

Approved by Production: Date

Approved by Sales: NR 4-15-86 Date

Unless otherwise specified, dimensions are given in inches.
Tolerances: Decimals ± Fractions ± Angles ±
Material Finish Weight

File Number

Drawing Number: B820454 R7

BRUNING 40-105-41503-3

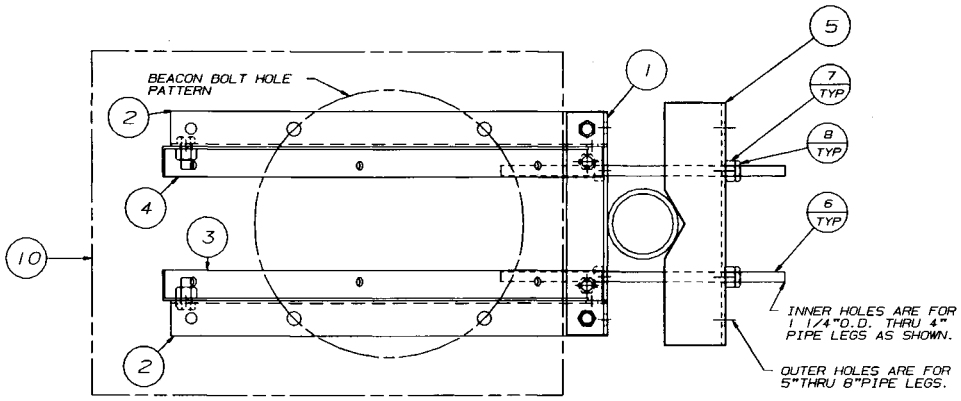

PLAN VIEW

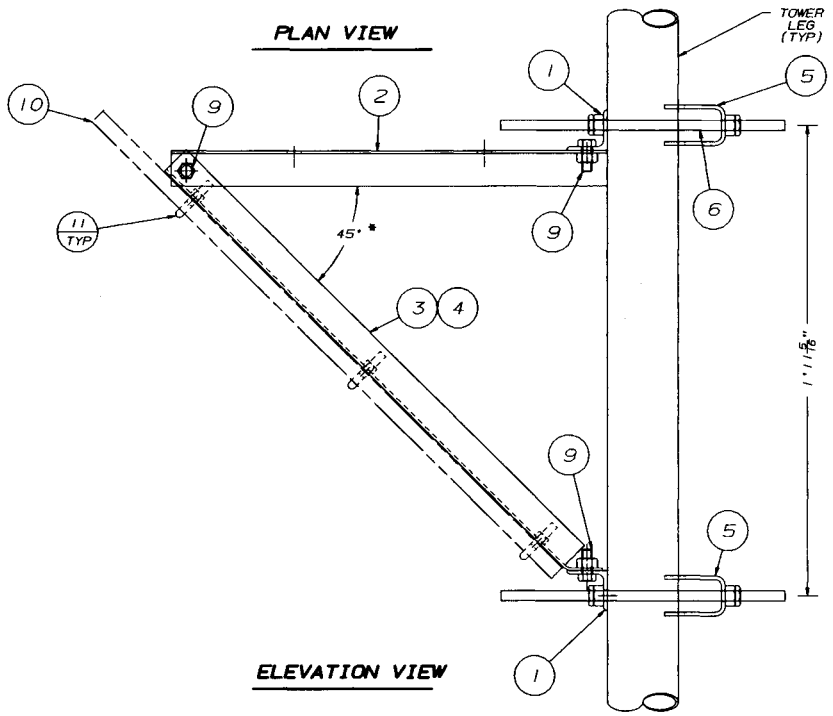

ELEVATION VIEW

SEE TOWER ASSEMBLY DRAWING IF ADDITIONAL LIGHTS ARE REQUIRED.

ASSY P/N APL1258UM BILL OF MATERIAL

ITEM	QUAN.	PART NO.	DESCRIPTION	DWG. NO.
1	2	KH4478	SUPPORT BRACKET L2 X 3/16"	B911674
2	2	KH4479	SUPPORT BRACKET L1 3/4 X 3/16"	B911675
3	1	KH4480	ANGLE KNEE BRACE L1 1/2 X 1/8"	B911676
4	1	KH4481	ANGLE KNEE BRACE L1 1/2 X 1/8"	B911676
5	2	KH3238	CLAMP	C861055
6	4	210255G	1/2" THREADED ROD 14"	N/A
7	8	230013	1/2" NUT	C770404
8	8	230011	1/2" PAL NUT	C770404
9	6	210017GA	BOLT ASSY 1/ X 1 1/4"	C770404

ASSY P/N ISBEACON BILL OF MATERIAL

ITEM	QUAN.	PART NO.	DESCRIPTION	DWG. NO.
1	2	KH4478	SUPPORT BRACKET L2 X 3/16"	B911674
2	2	KH4479	SUPPORT BRACKET L1 3/4 X 3/16"	B911675
3	1	KH4480	ANGLE KNEE BRACE L1 1/2 X 1/8"	B911676
4	1	KH4481	ANGLE KNEE BRACE L1 1/2 X 1/8"	B911676
5	2	KH3238	CLAMP	C861055
6	4	210255G	1/2" THREADED ROD 14"	N/A
7	8	230013	1/2" NUT	C770404
8	8	230011	1/2" PAL NUT	C770404
9	6	210017GA	BOLT ASSY 1/ X 1 1/4"	C770404
10	1	KH4482	3LB GRATING ICE SHIELD	B911686
11	6	J167A	J-BOLT ASSY 3/8 X 1-5/8"	B910973

* BEACON MOUNTING SURFACE SHALL BE LEVEL.
ADJUST KNEE BRACE ANGLE ACCORDINGLY ON A TAPERED LEGS.

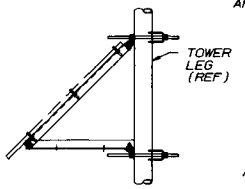

ISBEACON
LOCATE APPROXIMATELY 4' ABOVE BEACON BASE

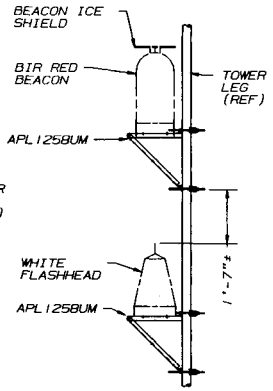

DUAL BEACONS ON STRAIGHT TOWER

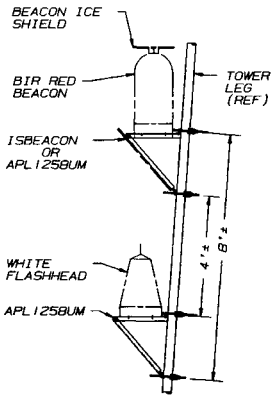

DUAL BEACONS ON TAPERED TOWER

No.	Revision Description	Date	Rev By	Ckd By	Appd By
R1	REMOVED BEACON ICE SHIELD P/N-ISBIR	4-19-96	PJD	NAW	TS

R O H N

Scale: NONE	By	Date
Drawn:	RKB	12-5-91
Checked:	WDU	12-11-91
App. Eng.:	TS	12-12-91
App. Sales:	JC	12-12-91

Title: MID BEACON PLATE ASSEMBLY AND BEACON ICE SHIELD 1 1/4"OD THRU 8"LEGS

ENG. FILE:

DRAWING NO.: C911782R1

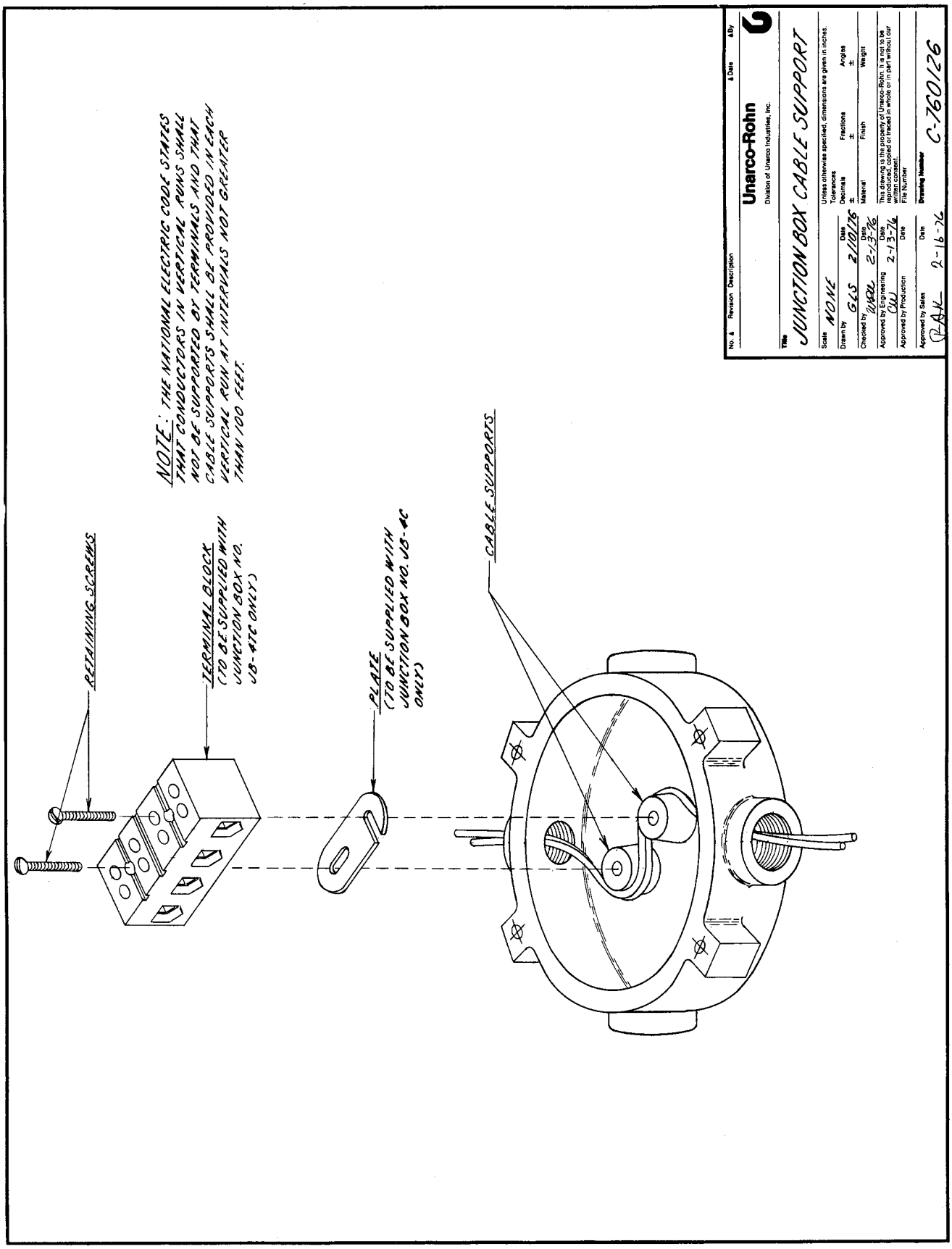
RETAINING SCREWS
TERMINAL BLOCK
(TO BE SUPPLIED WITH JUNCTION BOX NO. JB-4TC ONLY)
PLATE
(TO BE SUPPLIED WITH JUNCTION BOX NO. JB-4C ONLY)
CABLE SUPPORTS
NOTE: THE NATIONAL ELECTRIC CODE STATES THAT CONDUCTORS IN VERTICAL RUNS SHALL NOT BE SUPPORTED BY TERMINALS AND THAT CABLE SUPPORTS SHALL BE PROVIDED IN EACH VERTICAL RUN AT INTERVALS NOT GREATER THAN 100 FEET.
No. Δ Revision Description Δ Date ΔBy
Unarco-Rohn
Division of Unarco Industries, Inc.
Title
JUNCTION BOX CABLE SUPPORT
Scale NONE
Unless otherwise specified, dimensions are given in inches.
Tolerances
Decimals ±
Fractions ±
Angles ±
Drawn by GLS Date 2/10/76
Checked by Date 2-13-76
Approved by Engineering Date 2-13-76
Approved by Production Date
Approved by Sales Date 2-16-76
Material
Finish
Weight
This drawing is the property of Unarco-Rohn. It is not to be reproduced, copied or used in whole or in part without our written consent.
File Number
Drawing Number C-760126

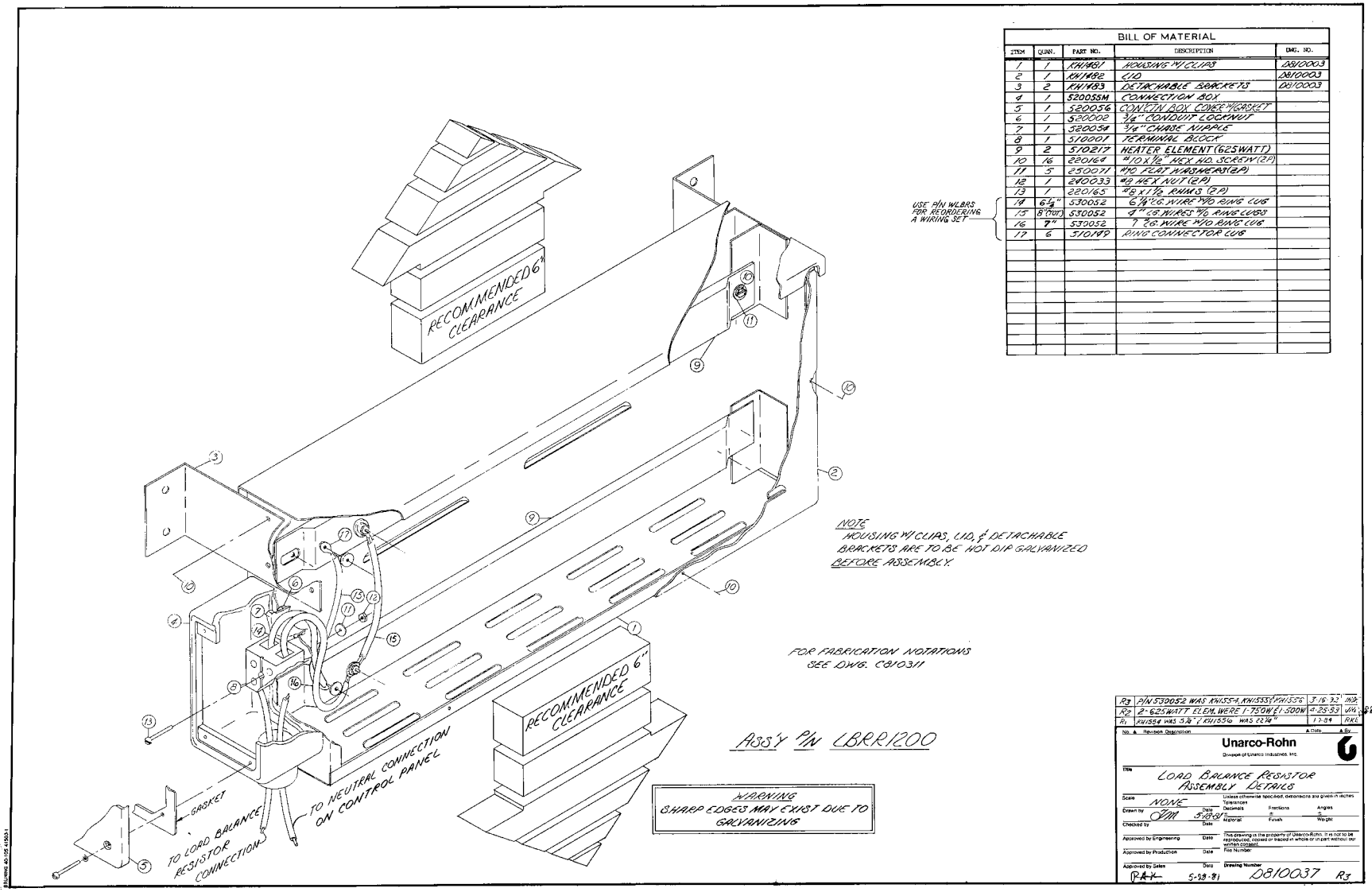

BILL OF MATERIAL				
ITEM	QUAN.	PART NO.	DESCRIPTION	DWG. NO.
1	1	KN1481	HOUSING W/ CLIPS	D810003
2	1	KN1482	LID	D810003
3	2	KN1483	DETACHABLE BRACKETS	D810003
4	1	520055M	CONNECTION BOX	
5	1	520056	CONN'TN BOX COVER W/GASKET	
6	1	520002	3/4" CONDUIT LOCKNUT	
7	1	520054	3/4" CHASE NIPPLE	
8	1	510001	TERMINAL BLOCK	
9	2	510217	HEATER ELEMENT (625WATT)	
10	16	220164	#10 X 1/2" HEX HD SCREW (ZP)	
11	5	250071	#10 FLAT WASHER (ZP)	
12	1	240033	#8 HEX NUT (ZP)	
13	1	220165	#8 X 1 1/2 RHMS (ZP)	
14	6 1/2"	530052	6 1/2" 16 WIRE W/O RING LUG	
15	8'0"(ref)	530052	4" 16 WIRES W/O RING LUGS	
16	7"	530052	7" 16 WIRE W/O RING LUG	
17	6	510149	RING CONNECTOR LUG	

USE P/N WLBRS FOR REORDERING A WIRING SET

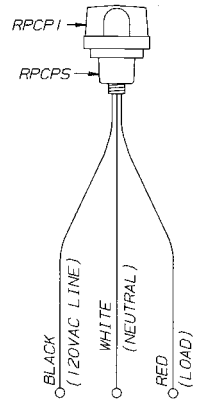

120VAC APPLICATIONS
60HZ

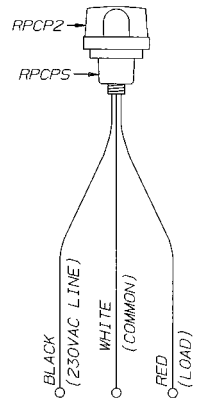

230VAC APPLICATIONS
50/60 HZ

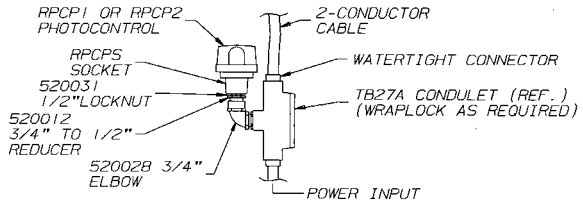

FOR RAIE APPLICATIONS

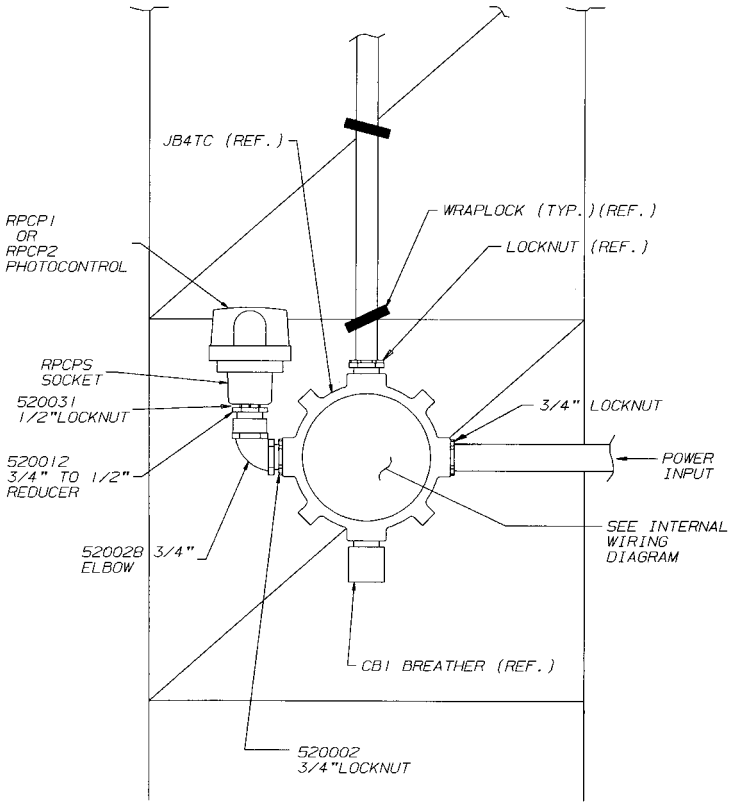

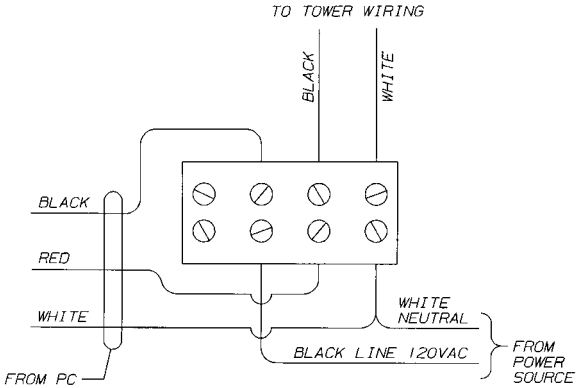

120VAC APPLICATIONS
INTERNAL WIRING DIAGRAM

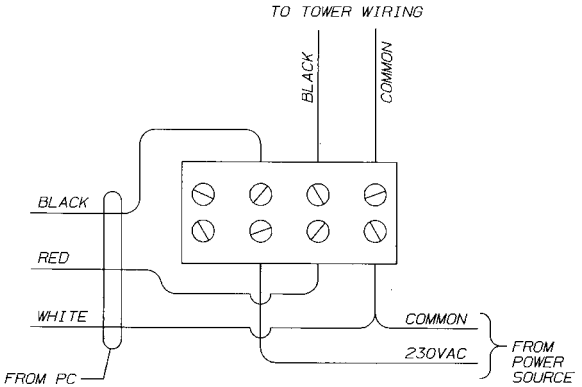

230VAC APPLICATIONS
INTERNAL WIRING DIAGRAM

NOTES:
1) RPHIP AND RPH2P INCLUDE PHOTOCONTROL, SOCKET AND CONDUIT FITTINGS REQUIRED FOR MOUNTING TO A 3/4" CONDUIT HUB.
2) PHOTOCONTROL SHOULD HAVE AN UNOBSTRUCTED VIEW OF THE NORTH SKY.
3) LOAD RATING IS 1800VA (RPCP1 & RPCP2).
4) PROVIDE OVER CURRENT PROTECTION PER NEC OR LOCAL CODES.

No.	Revision Description	Date	Rev. By	Ckd By	Appd By
R1	ADDED RAIE PHOTOCONTROL DETAIL	12/13/94	JHD	DC	TS

ROHN

Scale: NONE	By	Date
Drawn:	JHD	3/8/93
Checked:	DC	3/24/93
App. Eng.:	TS	3/25/93
App. Sales:	PM	3/26/93

Title: RPHIP (120V) AND RPH2P (230V) PHOTO CONTROL DETAILS

ENG. FILE:

DRAWING NO.: C930709R1

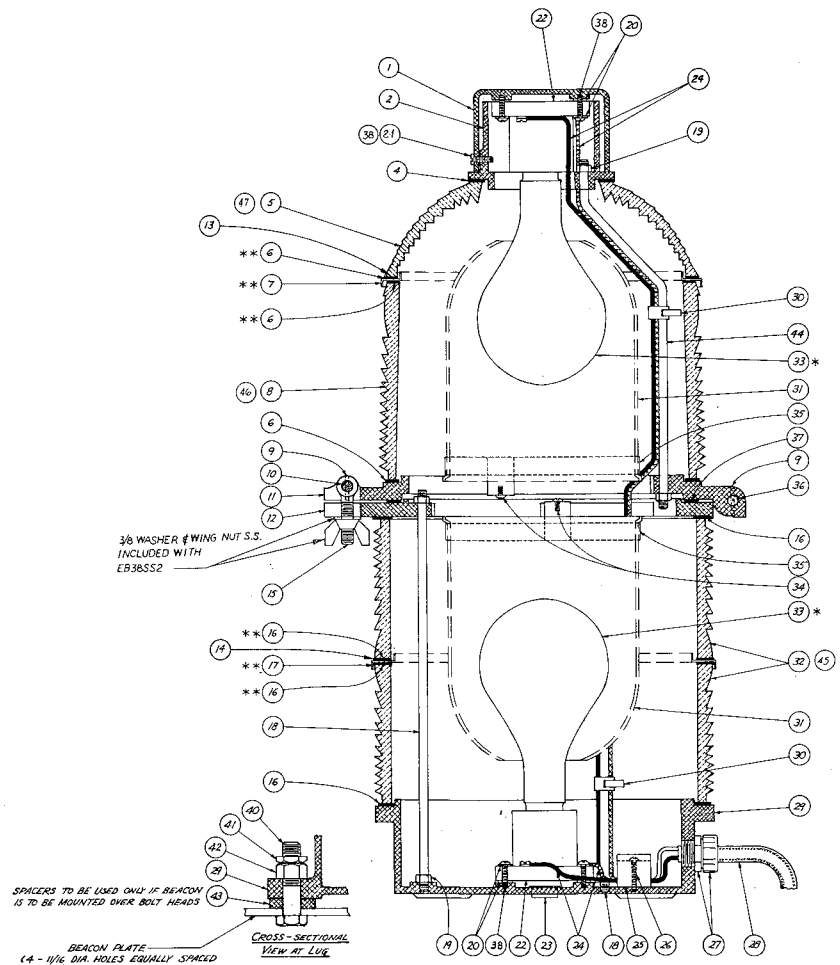

CHART

ITEM	PART NO.	B1R ASSY.	B1R ASSY	B1 ASSY
5	547870	—	—	1
8	547770	—	—	1
31	711130	—	—	2
32	547020	—	—	2
34	220009	—	—	6
45	AP3555	2	2	—
46	AP3556	1	1	—
47	AP3557	1	1	—
35	BACR	—	—	2
4	BGT1	1	1	1
6	BGT2	1	1	3
7	ZR1	—	—	1
16	BGB1	2	2	4
17	ZR2	—	—	1
37	BGM1	1	1	1
14	BGB2	1	—	—
13	BGT3	1	—	—

EFFECTIVE 12/97

** ADHESIVE REPLACES Z-RINGS AND GASKETS FOR B1R EFFECTIVE 11/85 - 12/97.

BGT3 AND BGB2 GASKETS REPLACED ADHESIVE BETWEEN LENS EFFECTIVE 12/97. SEE CHART.

BILL OF MATERIAL

ITEM	QUAN.	PART NO.	DESCRIPTION	DWG. NO.
1	1	B1C	CANOPY CAP	D 750007
2	1	B1F	CANOPY FLANGE	D 750007
3				
4	1	BG T1	3/8 x 5 1/4 OD NEOPRENE GASKET	
5	SEE CHART	547870	UPPER LENS	
6	1	BG T2	3/16 x 12 OD NEOPRENE GASKET	
7	SEE CHART	ZR1	UPPER "Z" RING	
8	SEE CHART	547770	CENTER LENS	
9	4	280023	1/8 x 1 DRIVE PIN SS	
10	1	KH1528	3/8 x 1 1/2 ALUMINUM PIN	
11	1	B1UH	UPPER HINGE RING	D 750007
12	1	B1LH	LOWER HINGE RING	D 750007
13	1	BGT3	3/16 x 12 OD NEOPRENE GASKET	
14	1	BGB2	3/16 x 12 3/4 OD NEOPRENE GASKET	
15	1	EB38SS2	EYEBOLT ASSY-CS. STEEL) THREADED	B830693
16	2	BG B1	3/16 x 12 3/4 OD NEOPRENE GASKET	
17	SEE CHART	ZR2	LOWER "Z" RING	
18	3	KH1531	TIE ROD, LOWER, 5/16 DIA.	B730445(R1)
19	15	240063	5/16-18 HEX. NUT (S.S)	
20	8	250002	#10 NYLON WASHER	
21	REF.	220012	#10-32 x 3/8 FHMS SUBSTITUTE FOR #38	
22	2	23XS26	LAMP RECEPTACLE	
23	1	520018	LOUVER	
24	1	WBS	LEAD W/LUG TO LAMP RECEPTACLES	
25	1	510001	TERMINAL BLOCK, 2-WIRE	
26	1	220017	#8-32 x 1/2 RD.HD.MACH.SCREW, SS	
27	1	2534	"WATER-TITE" CONNECTOR	
28	1	KH1527	#14/2 TYPE SOW A SERVICE CORD	
29	1	B1B	BASE	D 750007
30	4	520038	SEASTROM WIRE TIE	
31	SEE CHART	711130	RED COLOR SCREEN	
32	SEE CHART	547020	LOWER LENS	
* 33	2	B 620W	LAMP	
34	SEE CHART	220009	#10-32 x 3/8 RD.HD.MACH.SCREW, ZINC PLTD.	
35	SEE CHART	BACR	CLAMPING RING FOR COLOR SCREN	
36	1	KH1529	3/8 x 5 5/16 ALUMINUM PIN	
37	1	BG M1	.21" x 11.045 OD NEOPRENE GASKET	
38	*7	220197	#10-32 X 1 RD. HD. MACHINE SS	
40	4	210033G	5/8 x 2 1/2 HEX.HD.BOLT (GALV.)	
41	4	230017	5/8 FAL NUT (GALV.)	
42	4	230018	5/8 HVY. HEX. NUT (GALV.)	
43	4	KH391	SPACER, GALV., 5/8 x 1 1/2 (WITH 11/16" D. HOLE)	B770314
44	3	KH1532	TIE ROD, UPPER	B730445(R1)
45	2	AP3555	LENS BEACON BOTTOM 6150	
46	1	AP3556	LENS BEACON MIDDLE 6150	
47	1	AP3557	LENS BEACON TOP 6150	

* LAMPS ORDERED SEPARATELY

No.	Revision Description	Date	By
R5	REVISED ITEMS #14 & 15, #5 WAS BRASS	6-17-85	RWB
R4	ADDED CHART & B1R, DELETE #3, #25 510001 WAS 510115, #21 WAS 4, #9 280023 WAS 280022	5-2-85	RWB
R3	REVISED DESCRIPTION ON PIN KH1527	4-7-83	JHD
R2	REVISED PART NUMBERS	3-25-81	JHD
R1	CHANGED ITEM 13 PART NO. & DESCRIPTION	5-22-79	AED
R12	REVISED GASKETS	12-13-97	JHD
R11	REVISED NUT PIN'S, KH391 WAS 2"	1-23-96	JHD
R10	REVISED QTY ITEM 13 WAS 12, ITEM 24 WAS 2 & ITEM 30 WAS 3.	3-21-91	FHT
R9	#10 SCREW WAS 7/8" AND #38 QTY WAS 4, ADDED 3/8 WASHER NOTE	11-16-87	FHT/JHD
R8	REVISED ITEM 21 QTY TO 3 EA AND ADDED ITEM # 38, P/N 220157	7-7-86	FHT
R7	ADDED ADHESIVE NOTE, DELET. Z-RINGS, GASKETS, NAME PLATE & #8 DRIVE SCREWS	1-7-86	JHD
R6	REVISED ITEM 14 (WING NUT) CHANG'D WASHER SIZE	11-6-84	PJB

ROHN

Title: B1R OR B1 BEACON ASSEMBLY

Scale: NONE
Drawn by: AED Date: 8-15-77
Checked by: DC Date: 10-21-77
Approved by Engineering: CWJ Date: 10-24-77
Approved by Production: Date:
Approved by Sales: JAL Date: 11-24-77

Unless otherwise specified, dimensions are given in inches. Tolerances: Decimals ±, Fractions ±, Angles ±
Material: Finish: Weight:

File Number:
Drawing Number: D 770040 R12

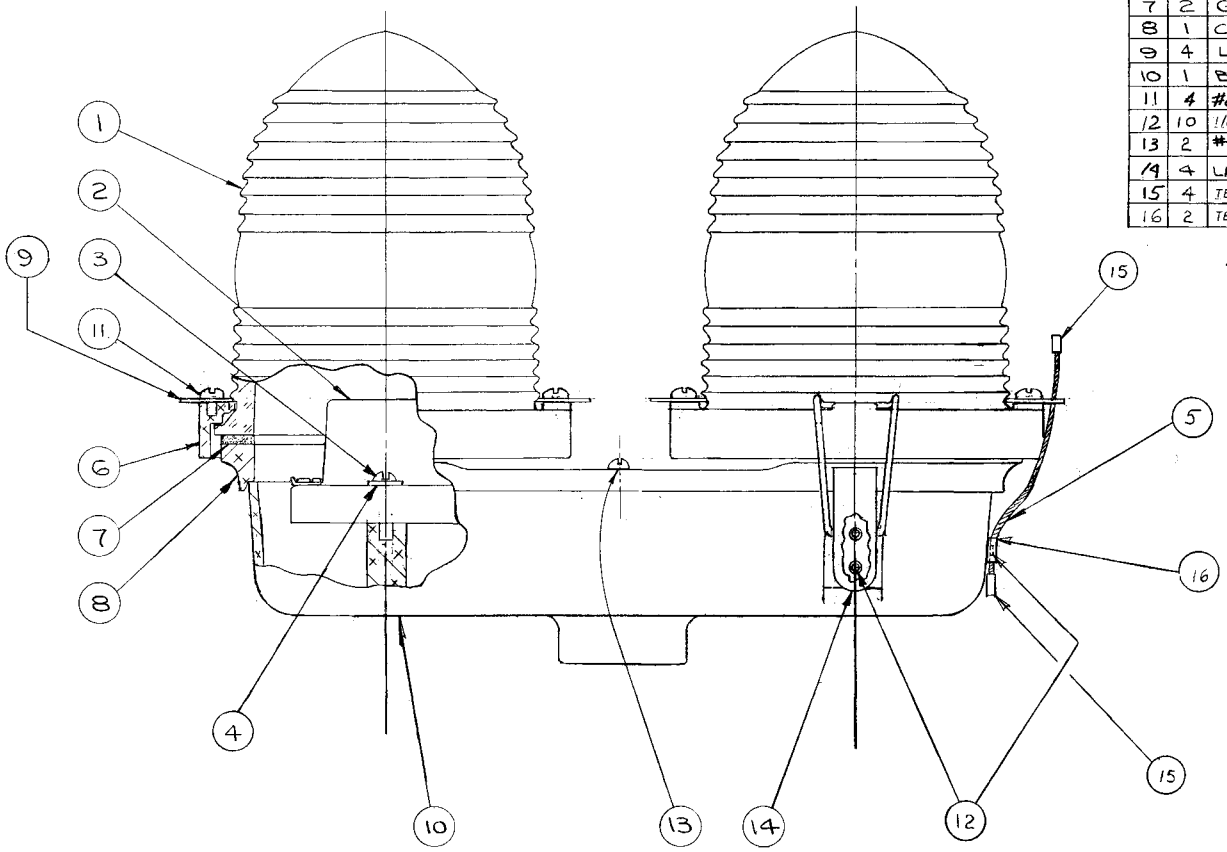

ITEM NO	NO REQ	DESCRIPTION	PART NO.
1	2	LENS	530230
2	2	LAMP RECEPTACLE	50714
3	4	#8-32 x 3/4 LG BD HD ZINC PLATED MACH. SCR	220006
4	4	#10 FLAT NYLON WASHER	250002
5	2	LENS RETAINING CABLE	KH2112
6	2	LENS RETAINER RING (*B810363)	OBR
7	2	GASKET	OBG1
8	1	COVER (*C621306)	OBC2
9	4	LENS RETAINER CLIP, ALUM	OBRC
10	1	BASE (*C621306)	OBB2
11	4	#8-32 x 1/4" LG ROUNDHEAD SS MACHINE SCREW	220186
12	10	1/8 DIA "POP" RIVET - STEEL RIVET & STEEL MANDREL	280010
13	2	#8-32 x 1 1/8 LG. PLATED ZINC MACH SCR	220007
14	4	LATCH ASSY	OBL
15	4	TERMINAL SPLICE UNINSULATED	510144
16	2	TERMINAL FLAG UNINSULATED	510118

* FABRICATION DRAWING - FOR SHOP USE ONLY

U	RS	FHT-JLG	REV. CABLE P/N'S REMOVED 220019 & 520017
R4	RKB		220186 WAS 220148, 220007 WAS 220015
R3	JHD		P/N OBRC WAS LRC
R2	JEB		REVISED LATCH & SCREWS
R1	NJ		GENERAL REVISIONS

DRAWN KEITH	OB2	TITLE DOUBLE OBSTRUCTION LIGHT ASSEMBLY
CHECKED		
APPROVED		
DATE 1-31-63	ROHN®	DRAWING NO. C621306 R5
SCALE NONE		

ITEM NO	NO REQ	DESCRIPTION	PART NO.
1	1	LENS	530230
2	1	LAMP RECEPTACLE	50719
3	2	#8-32 X 3/4 LG RD. HD. CAD. PLATED MACH. SCREW	220006
4	2	#10 FLAT NYLON WASHER	250002
5	4	1/8" DIA. POP RIVETS	280010
6	2	LATCH ASSY	OBL
7	2	LENS RETAINER CLIP, ALUM.	OBRC
8	1	LENS RETAINER RING (*B810363)	OBR
9	2	#8-32 X 1/4" LG ROUNDHEAD SS MACHINE SCREW	220186
10	1	LENS RETAINING CABLE	KH4516
11	1	NEOPRENE GASKET	OBG1
12	1	BASE (*B810362)	OBB1
13	2	TERMINAL SPLICE UNINSULATED	510144

*FABRICATION DWG - FOR SHOP USE ONLY

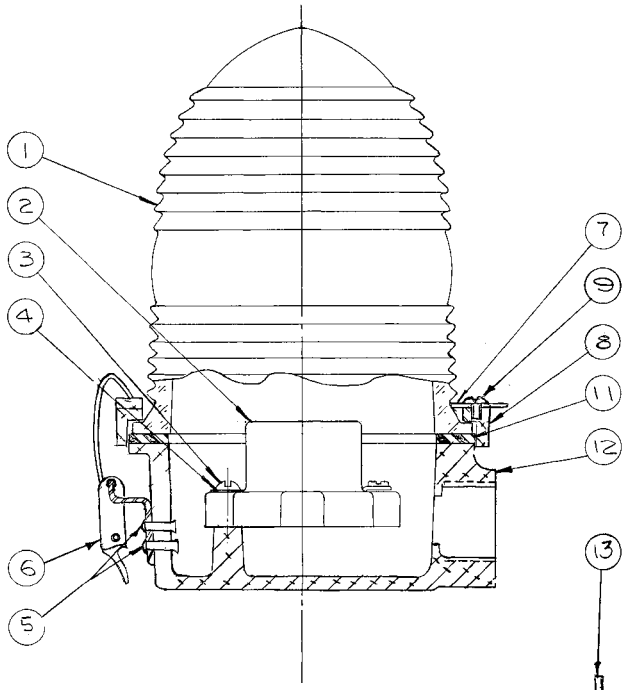

SECTION A-A

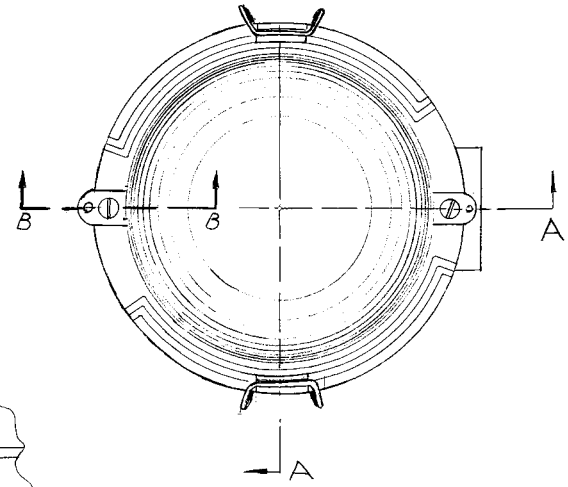

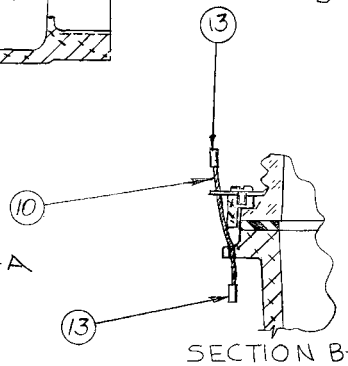

SECTION B-B

U R4	FHT ALJ	REV. CABLE P/NS & 280010 WAS 5	1-30-92
R3	RKB	220186 WAS 220148, 250002 WAS 4	4-26-83
R2	JEB	CHARGED OB1 LATCH & BASE	4-1-80
R1	ALJ	GENERAL REVISIONS	

DRAWN KEITH
CHECKED L.M.
APPROVED
DATE 6-29-62
SCALE NONE

OB1

ROHN®

TITLE: OBSTRUCTION LIGHT ASSEMBLY

DRAWING NO. C620701

ROHN™ Products

General Information

Products for a Growing World of Technology

ROHN™ Products

Foundation Information

Products for a Growing World of Technology

FOUNDATION AND ANCHOR TOLERANCES

ALL FOUNDATIONS

1. CONCRETE DIMENSIONS - PLUS OR MINUS 1" (25 mm).
2. DEPTH OF FOUNDATION - PLUS 3" (76 mm) OR MINUS 0".
3. DRILLED FOUNDATIONS OUT OF PLUMB - 1.0 DEGREE.
4. REINFORCING STEEL PLACEMENT - PER A.C.I. 301.
5. PROJECTION OF EMBEDMENTS - PLUS OR MINUS 1/8" (3 mm).
6. VERTICAL EMBEDMENTS OUT OF PLUMB - 1/2 DEGREE.

ANCHOR BOLTS

7. MAXIMUM DISTANCE FROM CENTERLINE OF ANCHOR BOLTS TO CENTERLINE OF FOUNDATION - 1/24 OF PIER DIAMETER UP TO A MAXIMUM OF 2" . (51 mm).
8. ANCHOR BOLT SPACING - 1/16" (2 mm).
9. ANCHOR BOLT CIRCLE ORIENTATION - 1/4 DEGREE.
10. ANCHOR BOLT CIRCLE DIAMETER - PLUS OR MINUS 1/16" (2 mm).

SELF-SUPPORTING TOWERS

11. FACE SPREAD DIMENSION CENTER TO CENTER OF ANCHOR BOLT CIRCLES - PLUS OR MINUS 1/16" (2 mm) OR 1/16" (2 mm) PER 20 FT (6 m) OF FACE SPREAD.
12. MAXIMUM DIFFERENCE BETWEEN ANY TWO FOUNDATION ELEVATIONS - 1/2" (13 mm).

GUYED TOWERS

13. GUY RADIUS - PLUS OR MINUS 5 PERCENT OF DISTANCE SPECIFIED.
14. ANCHOR ELEVATION - PLUS OR MINUS 5 PERCENT OF GUY RADIUS.
15. ANCHOR ALIGNMENT (PERPENDICULAR TO GUY RADIUS) - 0.1 DEGREES.
16. ANCHOR ROD SLOPE - PLUS OR MINUS 1.0 DEGREE.
17. ANCHOR ROD ALIGNMENT WITH GUY RADIUS PLUS OR MINUS 1.0 DEGREE.
18. ANCHOR HEAD OUT OF PLUMB - 1.0 DEGREE.
19. GUY INITIAL TENSION - PLUS OR MINUS 10 PERCENT OF TENSION SPECIFIED.

NOTE: TOLERANCES IN NOTES 13 AND 14 CAN NOT OCCUR SIMULTANEOUSLY.

WARNING !!!

AFTER ANCHOR BOLTS ARE INSTALLED AND CONCRETE HAS TAKEN ITS INITIAL SET, ANCHOR BOLTS MUST NOT BE MOVED, BENT OR REALIGNED IN ANY MANNER. A NUT LOCKING DEVICE MUST BE INSTALLED ON ALL ANCHOR BOLTS.

No. ▲	Revision Description	▲ Date	▲ Rev By	▲ Ckd By	▲ Appd By
R6	REVISED AND REDRAWN	12/23/96	JLR	[illegible]	XK

ROHN

Scale: NONE	By	Date
Drawn:	CSR	6/19/87
Checked:	KTL	9/25/87
App. Eng.:	XK	9/25/87
App. Sales:	AE	2/12/88

Title: FOUNDATION AND ANCHOR TOLERANCES

DRAWING NO.: A810214R6

STANDARD FOUNDATION NOTES

1. FOUNDATION DESIGNS ARE IN ACCORDANCE WITH ANSI/EIA-222-E, "STRUCTURAL STANDARDS FOR STEEL ANTENNA TOWERS AND ANTENNA SUPPORTING STRUCTURES", SECTION 7, FOR "NORMAL" SOIL CONDITIONS. "NORMAL" SOIL IS DEFINED AS DRY, COHESIVE SOIL WITH AN ALLOWABLE NET VERTICAL BEARING CAPACITY OF 4000 PSF (192 kPa) AND AN ALLOWABLE NET HORIZONTAL PRESSURE OF 400 PSF PER LINEAL FOOT OF DEPTH (62.8 kPa PER LINEAL METER OF DEPTH) TO A MAXIMUM OF 4000 PSF (192 kPa).
2. THE PURCHASER MUST VERIFY THAT ACTUAL SITE SOIL PARAMETERS MEET OR EXCEED E.I.A. "NORMAL" SOIL PARAMETERS AND THAT THE DEPTH OF STANDARD FOUNDATIONS ARE ADEQUATE BASED ON THE FROST PENETRATION AND/OR ZONE OF SEASONAL MOISTURE VARIATION AT THE SITE. FOUNDATION DESIGN MODIFICATIONS MAY BE REQUIRED IN THE EVENT "NORMAL" SOIL PARAMETERS ARE NOT APPLICABLE FOR THE ACTUAL SUBSURFACE CONDITIONS ENCOUNTERED.
3. FOUNDATION DESIGNS ASSUME FIELD INSPECTIONS WILL BE PERFORMED BY THE PURCHASER'S REPRESENTATIVE TO VERIFY THAT CONSTRUCTION MATERIALS, INSTALLATION METHODS AND ASSUMED DESIGN PARAMETERS ARE ACCEPTABLE BASED ON THE CONDITIONS EXISTING AT THE SITE.
4. WORK SHALL BE IN ACCORDANCE WITH LOCAL CODES, SAFETY REGULATIONS AND UNLESS OTHERWISE NOTED, THE LATEST REVISION OF ACI 318, "BUILDING CODE REQUIREMENTS FOR REINFORCED CONCRETE". PROCEDURES FOR THE PROTECTION OF EXCAVATIONS, EXISTING CONSTRUCTION AND UTILITIES SHALL BE ESTABLISHED PRIOR TO FOUNDATION INSTALLATION.
5. ANCHOR BOLTS SHALL MEET OR EXCEED THE REQUIREMENTS OF ASTM A354 GRADE BC AND SHALL BE TIGHTENED TO A SNUG TIGHT CONDITION (FULL EFFORT OF A MAN USING AN ORDINARY SPUD WRENCH).
6. PAL NUTS OR ANCO NUTS SHALL BE INSTALLED ON ALL ANCHOR BOLTS.
7. CONCRETE MATERIALS SHALL CONFORM TO THE APPROPRIATE STATE REQUIREMENTS FOR EXPOSED STRUCTURAL CONCRETE.
8. PROPORTIONS OF CONCRETE MATERIALS SHALL BE SUITABLE FOR THE INSTALLATION METHOD UTILIZED AND SHALL RESULT IN DURABLE CONCRETE FOR RESISTANCE TO LOCAL ANTICIPATED AGGRESSIVE ACTIONS. THE DURABILITY REQUIREMENTS OF ACI 318 CHAPTER 4 SHALL BE SATISFIED BASED ON THE CONDITIONS EXPECTED AT THE SITE. AS A MINIMUM, CONCRETE SHALL DEVELOP A MINIMUM COMPRESSIVE STRENGTH OF 3000 PSI (20.7 MPa) IN 28 DAYS.
9. MAXIMUM SIZE OF AGGREGATE SHALL NOT EXCEED SIZE SUITABLE FOR INSTALLATION METHOD UTILIZED OR 1/3 CLEAR DISTANCE BEHIND OR BETWEEN REINFORCING. MAXIMUM SIZE MAY BE INCREASED TO 2/3 CLEAR DISTANCE PROVIDED WORKABILITY AND METHODS OF CONSOLIDATION SUCH AS VIBRATING WILL PREVENT HONEYCOMBS OR VOIDS.
10. REINFORCEMENT SHALL BE DEFORMED AND CONFORM TO THE REQUIREMENTS OF ASTM A615 GRADE 60 UNLESS OTHERWISE NOTED. SPLICES IN REINFORCEMENT SHALL NOT BE ALLOWED UNLESS OTHERWISE INDICATED.
11. REINFORCING CAGES SHALL BE BRACED TO RETAIN PROPER DIMENSIONS DURING HANDLING AND THROUGHOUT PLACEMENT OF CONCRETE.
12. WELDING IS PROHIBITED ON REINFORCING STEEL AND EMBEDMENTS.
13. MINIMUM CONCRETE COVER FOR REINFORCEMENT SHALL BE 3 INCHES (76 mm) UNLESS OTHERWISE NOTED. APPROVED SPACERS SHALL BE USED TO INSURE A 3 INCH (76 mm) MINIMUM COVER ON REINFORCEMENT.
14. CONCRETE COVER FROM TOP OF FOUNDATION TO ENDS OF VERTICAL REINFORCEMENT SHALL NOT EXCEED 3 INCHES (76 mm) NOR BE LESS THAN 2 INCHES (51 mm).
15. SPACERS SHALL BE ATTACHED INTERMITTENTLY THROUGHOUT THE ENTIRE LENGTH OF VERTICAL REINFORCING CAGES TO INSURE CONCENTRIC PLACEMENT OF CAGES IN EXCAVATIONS.
16. FOUNDATION DESIGNS ASSUME STRUCTURAL BACKFILL TO BE COMPACTED IN 8 INCH (200 mm) MAXIMUM LAYERS TO 95% OF MAXIMUM DRY DENSITY AT OPTIMUM MOISTURE CONTENT IN ACCORDANCE WITH ASTM D698. ADDITIONALLY, STRUCTURAL BACKFILL MUST HAVE A MINIMUM COMPACTED UNIT WEIGHT OF 100 POUNDS PER CUBIC FOOT (16 kN/m3).
17. FOUNDATION DESIGNS ASSUME LEVEL GRADE AT TOWER SITE.
18. FOUNDATION INSTALLATION SHALL BE SUPERVISED BY PERSONNEL KNOWLEDGEABLE AND EXPERIENCED WITH THE PROPOSED FOUNDATION TYPE. CONSTRUCTION SHALL BE IN ACCORDANCE WITH GENERALLY ACCEPTED INSTALLATION PRACTICES.
19. FOR FOUNDATION AND ANCHOR TOLERANCES SEE DRAWING AB10214.
20. LOOSE MATERIAL SHALL BE REMOVED FROM BOTTOM OF EXCAVATION PRIOR TO CONCRETE PLACEMENT. SIDES OF EXCAVATION SHALL BE ROUGH AND FREE OF LOOSE CUTTINGS.
21. CONCRETE SHALL BE PLACED IN A MANNER THAT WILL PREVENT SEGREGATION OF CONCRETE MATERIALS AND OTHER OCCURRENCES WHICH MAY DECREASE THE STRENGTH OR DURABILITY OF THE FOUNDATION.
22. FREE FALL CONCRETE MAY BE USED PROVIDED FALL IS VERTICAL DOWN WITHOUT HITTING SIDES OF EXCAVATION, FORMWORK, REINFORCING BARS, FORM TIES, CAGE BRACING OR OTHER OBSTRUCTIONS. UNDER NO CIRCUMSTANCES SHALL CONCRETE FALL THROUGH WATER.
23. CONCRETE SHALL BE PLACED AGAINST UNDISTURBED SOIL EXCEPT FOR PIERS OF PIER AND PAD FOUNDATIONS. FORMS FOR PIERS SHALL BE REMOVED PRIOR TO PLACING STRUCTURAL BACKFILL.
24. CONSTRUCTION JOINTS, IF REQUIRED IN PIER MUST BE AT LEAST 12 INCHES (305MM) BELOW BOTTOM OF EMBEDMENTS AND MUST BE INTENTIONALLY ROUGHENED TO A FULL AMPLITUDE OF 1/4 INCH (6MM). FOUNDATION DESIGN ASSUMES NO OTHER CONSTRUCTION JOINTS.
25. TOP OF FOUNDATION OUTSIDE LIMITS OF ANCHOR BOLTS SHALL BE SLOPED TO DRAIN WITH A FLOATED FINISH. AREA INSIDE LIMITS OF ANCHOR BOLTS SHALL BE LEVEL WITH A SCRATCHED FINISH.
26. EXPOSED EDGES OF CONCRETE SHALL BE CHAMFERED 3/4" X 3/4" (19 mm X 19 mm) MINIMUM.
27. FOR ANCHOR BLOCK TYPE FOUNDATIONS, THE PORTION OF ALL STEEL ANCHORS, FROM TOP OF ANCHOR BLOCK TO GROUND LEVEL, SHALL BE COATED WITH BITUMEN. DESIGN ASSUMES PERIODIC INSPECTIONS WILL BE PERFORMED OVER THE LIFE OF THE STRUCTURE TO DETERMINE IF ADDITIONAL ANCHOR CORROSION PROTECTION MEASURES MUST BE IMPLEMENTED BASED ON OBSERVED SITE-SPECIFIC CONDITIONS

No.	Revision Description	Date	Rev By	Ckd By	Appd By
R10	REVISED NOTE #9 & #24	11/3/94	CSR	KTL	XK
R9	REV'D NOTES 27 & 9	1-18-94	RKB	WDU	XK

ROHN

Scale: NONE	By	Date
Drawn:	CSR	6/17/87
Checked:	HA	1/6/88
App. Eng.:	XK	1/6/88
App. Sales:	AE	2/2/88

Title: FOUNDATION MATERIAL SPECIFICATIONS, INSTALLATION NOTES AND TOLERANCES

DRAWING NO.: B841300R10

ID#	M	N	R
ABL61	12' 11	11' 2 1/4	7' 5 1/2
ABL62	14' 11	12' 11	8' 7 3/8
ABL63	16' 10 1/4	14' 7 3/16	9' 8 3/4
ABL64	18' 10 1/4	16' 3 15/16	10' 10 5/8
ABL65	20' 10 3/8	18' 0 13/16	12' 0 9/16
ABL66	22' 10 3/8	19' 9 5/8	13' 2 7/16
ABL67	24' 10 3/8	21' 6 3/8	14' 4 1/4
ABL68	8' 9 1/2	7' 7 3/8	5' 0 15/16
ABL69	10' 9 1/2	9' 4 1/8	6' 2 3/4
ABL610	12' 9 1/2	11' 0 15/16	7' 4 5/8
ABL611	15' 0 1/2	13' 0 5/16	8' 8 3/16
ABL612	17' 6 1/2	15' 2 5/16	10' 1 9/16
ABL613	20' 0 1/2	17' 4 1/4	11' 6 7/8
ABL614	22' 6 1/2	19' 6 1/4	13' 0 3/16
ABL615	25' 0 1/2	21' 8 1/4	14' 5 1/2
ABL616	27' 6 1/2	23' 10 1/4	15' 10 13/16
ABL617	30' 0 1/2	26' 0 3/16	17' 4 1/8
ABL618	32' 6 1/2	28' 2 3/16	18' 9 7/16
ABL619	36' 3 1/2	31' 5 3/16	20' 11 7/16
ABL620	40' 0 1/2	34' 8 1/8	23' 1 7/16
ABL621	43' 9 1/2	37' 11 1/8	25' 3 3/8
ABL622	14' 9 1/4	12' 9 1/2	8' 6 5/16
ABL623	20' 9 3/8	17' 11 15/16	12' 0
ABL624	17' 5 1/2	15' 1 7/16	10' 0 15/16
ABL625	18' 9 1/4	16' 3 1/16	10' 10 1/16
ABL626	22' 9 3/8	19' 8 3/4	13' 1 13/16
ABL627	32'-5 1/2	28'-1 5/16	18'-8 7/8
ABL628	24'-9 3/8	21'-5 9/16	14'-3 11/16
ABL629	16'-9 1/4	14'-6 5/16	9'-8 3/16
ABL630	14' 11 1/2	12' 11 7/16	8' 7 5/8
ABL631	12' 9	11' 0 1/2	7' 4 5/16
ABL632	14' 10	12' 10 1/8	8' 6 3/4
ABL633	12' 10	11' 1 3/8	7' 4 15/16
ABL634	6' 11	5' 11 7/8	3' 11 15/16

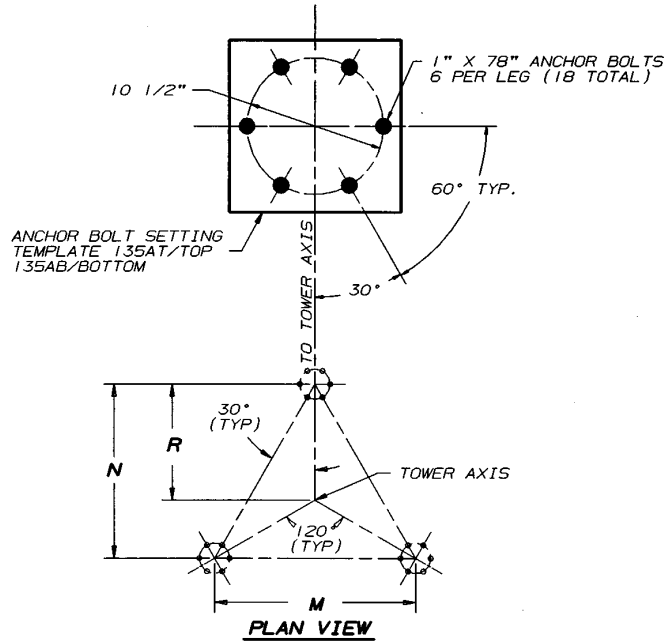

PLAN VIEW

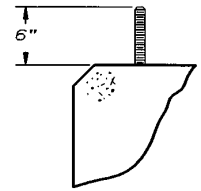

ANCHOR BOLT PROJECTION

NOTES

1. FOR ANCHOR AND FOUNDATION TOLERANCES REFER TO THE LATEST REVISION OF DWG. NO. A810214.
2. ALL ANCHOR BOLTS SHALL MEET OR EXCEED REQUIREMENTS OF ASTM A354 GR BC AND ARE HOOKED 180° AT THE BOTTOM.
3. WHEN FOUNDATIONS ARE DESIGNED BY OTHERS, IT SHALL BE THE RESPONSIBILITY OF THE PURCHASER'S FOUNDATION ENGINEER TO INSURE THAT THE ANCHORAGES PROVIDED ARE COMPATIBLE WITH THE PROPOSED FOUNDATION DESIGNS AND THAT THE CAPACITIES OF THE ANCHORAGES ARE NOT LIMITED BY THE STRENGTH OF THE FOUNDATIONS.
4. FOR ANCHOR BOLT TEMPLATE DETAILS SEE DRAWING B730521

No.	Revision Description	Date	Rev By	Ckd By	Appd By
R3	ADDED ABL630-ABL634	12/19/95	PJD	JDM	TS
R2	REVISED NOTE 2 AND ADDED ABL627-ABL629	6/8/90	WEB	WDU	TS
R1	REV'D. PLAN VIEW, ADDED ID NO'S. ABL622-ABL626	4-14-89	KTL	RKB	TS

ROHN

Scale: NONE	By	Date
Drawn:	WDU	6/15/88
Checked:	KTL	7-21-88
App. Eng.:	TS	7-28-88
App. Sales:	AE	7-28-88

Title: 6 HOLE ANCHOR BOLT LAYOUT

ENG. FILE:

DRAWING NO.: C880726 R3

ID#	M	N	R
ABL81	18' 11 7/8	16' 5 3/8	10' 11 9/16
ABL82	21' 0	18' 2 1/4	12' 1 1/2
ABL83	23' 0	19' 11	13' 3 3/8
ABL84	25' 0	21' 7 13/16	14' 5 3/16
ABL85	8' 11 1/8	7' 8 3/4	5' 1 7/8
ABL86	10' 11 1/8	9' 5 9/16	6' 3 11/16
ABL87	12' 11 1/8	11' 2 5/16	7' 5 9/16
ABL88	15' 2 1/8	13' 1 3/4	8' 9 1/8
ABL89	17' 8 1/8	15' 3 11/16	10' 2 1/2
ABL810	20' 2 1/8	17' 5 11/16	11' 7 13/16
ABL811	22' 8 1/8	19' 7 11/16	13' 1 1/8
ABL812	25' 2 1/8	21' 9 5/8	14' 6 7/16
ABL813	27' 8 1/8	23' 11 5/8	15' 11 3/4
ABL814	30' 2 1/8	26' 1 5/8	17' 5 1/16
ABL815	32' 8 1/8	28' 3 9/16	18' 10 3/8
ABL816	36' 5 1/8	31' 6 9/16	21' 0 3/8
ABL817	40' 2 1/8	34' 9 9/16	23' 2 3/8
ABL818	43' 11 1/8	38' 0 1/2	25' 4 5/16
ABL819	47' 8 1/8	41' 3 1/2	27' 6 5/16
ABL820	51' 5 1/8	44' 6 7/16	29' 8 5/16
ABL821	55' 2 1/8	47' 9 7/16	31' 10 5/16
ABL822	25' 0 1/2	21' 8 1/4	14' 5 1/2
ABL823	24' 10 3/8	21' 6 3/8	14' 4 1/4
ABL824	27' 6 1/2	23' 10 1/4	15' 10 13/16
ABL825	32' 6 1/2	28' 2 3/16	18' 9 7/16
ABL826	36' 3 1/2	31' 5 3/16	20' 11 7/16
ABL827	30' 0 1/2	26' 0 3/16	17' 4 1/8
ABL828	22' 6 1/2	19' 6 1/4	13' 0 3/16
ABL829	20' 0 1/2	17' 4 1/4	11' 6 7/8
ABL830	17' 6 1/2	15' 2 5/16	10' 1 1/2
ABL831	18' 10 1/4	16' 3 15/16	10' 10 5/8
ABL832	22' 10 3/8	19' 9 5/8	13' 2 7/16
ABL833	16' 10 1/4	14' 7 3/16	9' 8 3/4
ABL834	20' 10 3/8	18' 0 13/16	12' 0 1/2
ABL835	40' 0 1/2	34' 8 1/8	23' 1 3/8
ABL836	16' 11 7/8	14' 8 9/16	9' 9 11/16

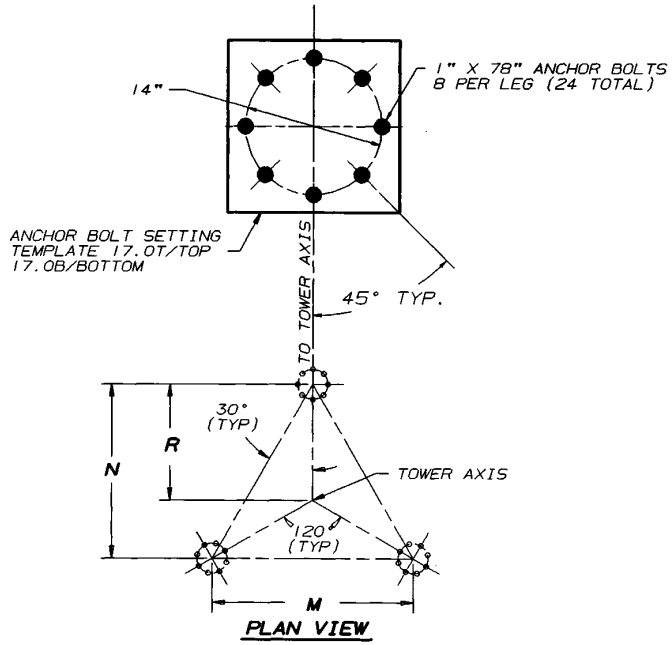

PLAN VIEW

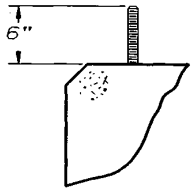

ANCHOR BOLT PROJECTION

NOTES

1. FOR ANCHOR AND FOUNDATION TOLERANCES REFER TO THE LATEST REVISION OF DWG. NO. A810214.
2. ALL ANCHOR BOLTS SHALL MEET OR EXCEED REQUIREMENTS OF ASTM A354 GR BC AND ARE HOOKED 180° AT THE BOTTOM.
3. WHEN FOUNDATIONS ARE DESIGNED BY OTHERS, IT SHALL BE THE RESPONSIBILITY OF THE PURCHASER'S FOUNDATION ENGINEER TO INSURE THAT THE ANCHORAGES PROVIDED ARE COMPATIBLE WITH THE PROPOSED FOUNDATION DESIGNS AND THAT THE CAPACITIES OF THE ANCHORAGES ARE NOT LIMITED BY THE STRENGTH OF THE FOUNDATIONS.
4. FOR ANCHOR BOLT TEMPLATE DETAILS SEE DRAWING B730521.

No.	Revision Description	Date	Rev By	Ckd By	Appd By
R3	ADDED ABL831-ABL836	12/19/95	PJD	JAM	TS
R2	REVISED NOTE 2 & ADDED ABL826-ABL830	6/8/90	WEB	WDU	TS
R1	REV'D. PLAN VIEW, ADDED ID NO'S. ABL822-ABL825	4-14-89	KTL	RKB	TS

R O H N

Scale: NONE	By	Date
Drawn:	WDU	6/15/88
Checked:	KTL	7-21-88
App. Eng.:	TS	7-28-88
App. Sales:	AE	7-28-88

Title: 8 HOLE ANCHOR BOLT LAYOUT

ENG. FILE:

DRAWING NO.: C880727 R3

ID#	M	N	R
ABL101	18' 11 7/8	16' 5 3/8	10' 11 9/16
ABL102	21' 0	18' 2 1/4	12' 1 1/2
ABL103	23' 0	19' 11	13' 3 3/8
ABL104	25' 0	21' 7 13/16	14' 5 3/16
ABL105	8' 11 1/8	7' 8 3/4	5' 1 7/8
ABL106	10' 11 1/8	9' 5 9/16	6' 3 11/16
ABL107	12' 11 1/8	11' 2 5/16	7' 5 9/16
ABL108	15' 2 1/8	13' 1 3/4	8' 9 1/8
ABL109	17' 8 1/8	15' 3 11/16	10' 2 1/2
ABL1010	20' 2 1/8	17' 5 11/16	11' 7 13/16
ABL1011	22' 8 1/8	19' 7 11/16	13' 1 1/8
ABL1012	25' 2 1/8	21' 9 5/8	14' 6 7/16
ABL1013	27' 8 1/8	23' 11 5/8	15' 11 3/4
ABL1014	30' 2 1/8	26' 1 5/8	17' 5 1/16
ABL1015	32' 8 1/8	28' 3 9/16	18' 10 3/8
ABL1016	36' 5 1/8	31' 6 9/16	21' 0 3/8
ABL1017	40' 2 1/8	34' 9 9/16	23' 2 3/8
ABL1018	43' 11 1/8	38' 0 1/2	25' 4 5/16
ABL1019	47' 8 1/8	41' 3 1/2	27' 6 5/16
ABL1020	51' 5 1/8	44' 6 7/16	29' 8 5/16
ABL1021	55' 2 1/8	47' 9 7/16	31' 10 5/16
ABL1022	18' 10 1/4	16' 3 15/16	10' 10 5/8
ABL1023	22' 10 3/8	19' 9 5/8	13' 2 7/16
ABL1024	16' 10 1/4	14' 7 3/16	9' 8 3/4
ABL1025	20' 10 3/8	18' 0 13/16	12' 0 1/2
ABL1026	40' 0 1/2	34' 8 1/8	23' 1 3/8
ABL1027	16' 11 7/8	14' 8 9/16	9' 9 11/16

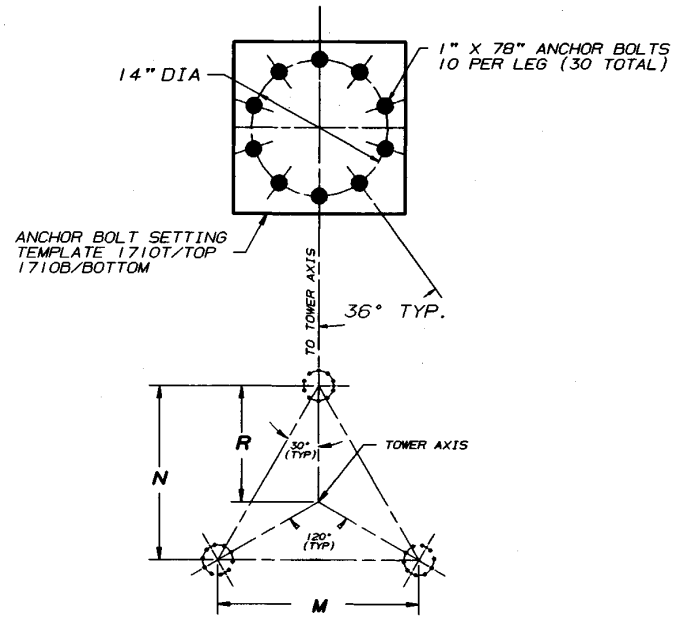

PLAN VIEW

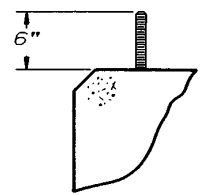

ANCHOR BOLT PROJECTION

NOTES

1. FOR ANCHOR AND FOUNDATION TOLERANCES REFER TO THE LATEST REVISION OF DWG. NO. AB10214.
2. ALL ANCHOR BOLTS SHALL MEET OR EXCEED REQUIREMENTS OF ASTM A354 GR BC AND ARE HOOKED 180° AT THE BOTTOM.
3. WHEN FOUNDATIONS ARE DESIGNED BY OTHERS, IT SHALL BE THE RESPONSIBILITY OF THE PURCHASER'S FOUNDATION ENGINEER TO INSURE THAT THE ANCHORAGES PROVIDED ARE COMPATIBLE WITH THE PROPOSED FOUNDATION DESIGNS AND THAT THE CAPACITIES OF THE ANCHORAGES ARE NOT LIMITED BY THE STRENGTH OF THE FOUNDATIONS.
4. FOR ANCHOR BOLT TEMPLATE DETAILS SEE DRAWING B730521.

No.	Revision Description	Date	Rev By	Ckd By	Appd By
R3	ADDED ABL1022-ABL1027	12/19/95	PJD	JDM	TS
R2	REVISED NOTE 2	6/8/90	WEB	WDU	TS
R1	REVISED PLAN VIEW	4-14-89	KTL	RKB	TS

ROHN

Scale: NONE	By	Date
Drawn:	PJB	8/9/88
Checked:	KTL	8-11-88
App. Eng.:	TS	8-12-88
App. Sales:	AE	8-12-88

Title: **10 HOLE ANCHOR BOLT LAYOUT**

ENG. FILE:

DRAWING NO.: C880790 R3

FDN. I.D. NO.	MAX ANCHOR BOLT SIZE, ALL FND TYPES	LIMITS FOR TYPES 1,2 & 3			PIER AND PAD (TYPE 1)								DRILL AND BELL (TYPE 2)						DRILLED PIER (TYPE 3)					MAT (TYPE 4)			
		ALLOW. LEG LOAD (KIPS)	ALLOW. SHEAR (KIPS PER LEG)	MIN ANCHOR BOLT SIZE (NOTE 6)	MIN FACE SPREAD	D	A	C	VERT. BARS	HOR. BARS	REQ'D CONC. (CU. YDS. 3 FDNS) ROUND	REQ'D CONC. (CU. YDS. 3 FDNS) SQUARE	MIN FACE SPREAD	D	X	Y	VERT. BARS	REQ'D CONC. (CU. YDS. 3 FDNS)	MIN FACE SPREAD	D	Y	VERT. BARS	REQ'D. CONC. (CU. YDS. 3 PIERS)	MAX FACE SPREAD	MAX O.T.M. FOOT KIPS	W	REQ'D CONC. (CU. YDS.) (NOTE 7)
F1	(4) 5/8	4.5		N/A																				1' 6	12.8	4' 0	2.4
F2	(4) 5/8	11.2		N/A																				2' 10	33.2	5' 6	4.5
F3	(4) 5/8	19.6		N/A																				3' 11	61.5	6' 9	6.8
F4	(4) 5/8	28.0		N/A																				5' 0	102	8' 0	9.5
F5	(4) 5/8	36.0		N/A																				5' 8	133	8' 9	11.3
F6	(4) 7/8	33.7	4.0	5/8X42	6' 6	8' 0	4' 6	2' 0	8 #6	#6	6.3	6.9												7' 7	304	11' 6	19.6
F7	(4) 7/8	43.6	6.0	5/8X42	8' 6	8' 9	5' 6	2' 0	8 #7	#6	8.7	9.4	7' 6	11' 0	4' 6	2' 6	10 #6	7.8	7' 6	16' 0	2' 6	10 #6	9.0	10' 0	578	14' 3	30.1
F8	(4) 7/8	52.5	6.0	5/8X42	8' 6	8' 9	5' 6	2' 0	8 #7	#6	8.7	9.4	7' 6	11' 0	4' 6	2' 6	10 #6	7.8	7' 6	18' 6	2' 6	10 #6	10.4	11' 1	819	16' 0	37.9
F9	(4) 7/8	56.0	8.0	5/8X42	8' 6	9' 0	5' 6	2' 0	8 #7	#6	8.8	9.5	7' 6	11' 0	5' 0	2' 6	10 #6	8.7	7' 6	19' 6	2' 6	10 #6	10.9	13' 0	1210	18' 3	49.3
F10	(4) 1	64.9	10.0	3/4X48	8' 6	10' 0	5' 6	2' 6	8 #8	#6	10.8	12.0	7' 6	12' 0	5' 0	2' 6	10 #6	9.2	7' 6	21' 9	2' 6	10 #6	12.2	14' 11	1780	20' 9	63.8
F11	(4) 1	85.6	10.0	3/4X48	8' 6	11' 0	5' 6	2' 6	10 #8	#6	11.3	12.7	8' 0	12' 6	6' 0	2' 6	10 #6	11.8	9' 0	22' 9	3' 0	12 #6	18.3	16' 10	2430	23' 0	78.4
F12	(6) 1	114.0	15.0	7/8X60	9' 6	12' 0	6' 3	3' 0	12 #8	#6	16.3	18.5	9' 0	14' 0	6' 6	3' 0	10 #7	16.7	10' 6	25' 0	3' 6	12 #7	27.3	18' 11	3610	26' 3	102
F13	(6) 1	129.0	15.0	7/8X60	10' 0	12' 6	6' 6	3' 0	12 #8	#6	17.3	19.7	9' 0	14' 0	7' 0	3' 0	12 #7	18.4	10' 6	27' 6	3' 6	12 #7	30.0				
F14	(6) 1	152.0	15.0	7/8X60	11' 0	13' 0	7' 3	3' 0	12 #8	#6	19.9	22.4	9' 3	15' 0	7' 3	3' 0	12 #8	20.1	12' 0	30' 0	4' 0	12 #8	42.6				
F15	(8) 1	184.0	20.0	7/8X60	12' 6	13' 9	7' 9	3' 6	16 #8	#6	25.6	29.2	10' 6	16' 0	8' 0	3' 6	12 #8	27.6	12' 0	38' 0	4' 0	12 #8	53.8				
F16	(8) 1	215.0	25.0	1X78	14' 0	14' 0	8' 9	3' 6	16 #8	#6	29.4	33.1	10' 9	16' 0	8' 9	3' 6	16 #8	31.4	13' 6	38' 0	4' 6	16 #8	68.0				
F17	(8) 1	242.0	25.0	1X78	15' 3	14' 0	9' 9	3' 6	16 #9	#7	33.4	37.1	11' 3	17' 0	9' 3	3' 6	16 #8	35.4	13' 6	44' 0	4' 6	16 #8	78.6				
F18	(8) 1	268.0	35.0	1X78	16' 6	14' 0	10' 9	4' 0	21 #9	#7	42.0	46.7	12' 0	17' 0	9' 9	4' 0	16 #9	42.7	13' 6	49' 0	4' 6	16 #8	87.5				

NOTE: MAX O.T.M. IS ABOUT MAT CENTERLINE AT BOTTOM OF MAT.

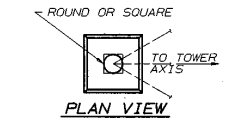

PLAN VIEW

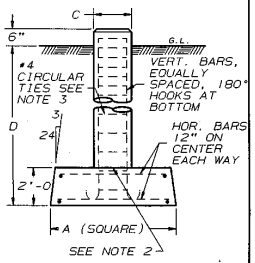

ELEVATION VIEW
PIER AND PAD

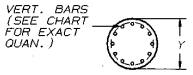

SECTION A-A

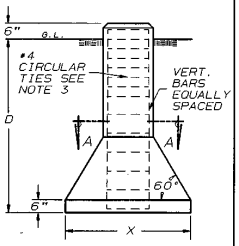

ELEVATION VIEW
DRILL AND BELL

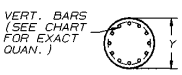

SECTION A-A

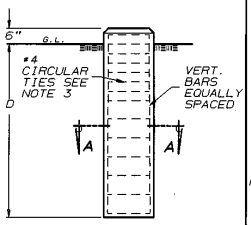

ELEVATION VIEW
DRILLED PIER

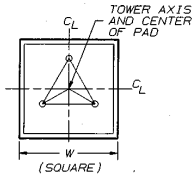

PLAN VIEW

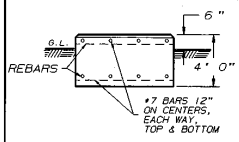

ELEVATION VIEW
MAT

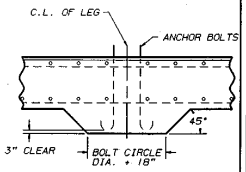

TYPICAL POCKET DETAIL
(SEE NOTE 7)

GENERAL NOTES

1. FOR REQUIRED MATERIAL SPECIFICATIONS, INSTALLATION NOTES, AND TOLERANCES SEE DRAWING NUMBER B841300.
2. ROUGHEN CONSTRUCTION JOINT TO A FULL AMPLITUDE OF 1/4 INCH.
3. CIRCULAR TIES TO BE PLACED ON 3 INCH CENTERS FOR TOP 4 FEET AND 12 INCH CENTERS FROM 4 FEET TO BOTTOM, WITH 22 INCH LAPS.
4. FOR ANCHOR BOLT SETTING TEMPLATE INFORMATION AND BASE DETAILS SEE DRAWING NUMBER B730521.
5. FOR ANCHOR BOLT SIZE AND QUANTITY SEE ANCHOR BOLT LAYOUT DWG. FOR TOWER.
6. MIN ANCHOR BOLT SIZE SHOWN IS REQUIRED FOR DEVELOPMENT WITH VERTICAL REINFORCING BARS. LARGER ANCHOR BOLTS MAY BE REQUIRED BASED ON TOWER REACTIONS.
7. ANCHOR BOLTS OVER 48" LONG REQUIRE POCKETS UNDERNEATH EACH LEG FOR MAT FOUNDATIONS. CONCRETE VOLUME INDICATED IN TABLE DOES NOT INCLUDE VOLUME OF POCKETS. SEE TYPICAL POCKET DETAILS FOR MAT FOUNDATION.

No.	Revision Description	Date	Rev By	Chk By	Appd By
R2	ADDED LARGER MATS	2-2-98	SPH	WHN	XK

ROHN

	By	Date
Scale: NONE		
Drawn:	WDU	12-10-87
Checked:	RAM	5/2/88
App. Eng.:	XK	5/2-88
App. Sales:	AE	5-2-88

Title: STANDARD FOUNDATIONS FOR SELF SUPPORTING TOWERS

ENG. FILE:

DRAWING NO.: D870532 R2

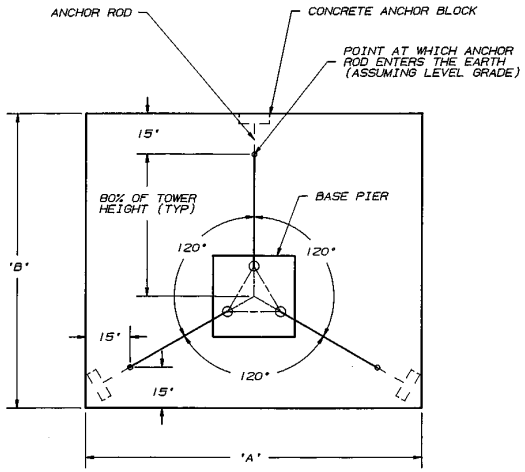

L A Y O U T A

THIS IS THE MINIMUM AREA OF LAND REQUIRED. HOWEVER, THIS AREA WILL NOT ALWAYS PERMIT ORIENTING TOWER INTO THE BEST POSITION FOR ANTENNA PATH DIRECTION.

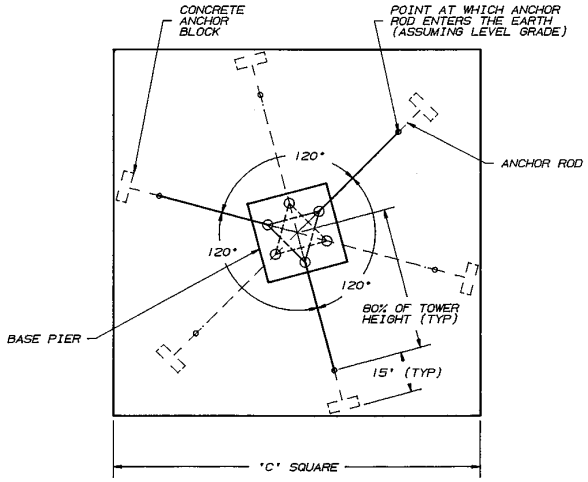

L A Y O U T B

THIS IS THE MINIMUM AREA OF LAND REQUIRED TO PERMIT ORIENTING THE TOWER IN ANY POSITION FOR ANTENNA PATH DIRECTION.

TOWER HEIGHT	LAYOUT A			LAYOUT B	
	ACRES	A	B	ACRES	C
20'	0.08	60'	55'	0.10	65'
30'	0.12	75'	70'	0.15	80'
40'	0.17	90'	80'	0.21	95'
50'	0.21	100'	90'	0.28	110'
60'	0.28	115'	105'	0.39	130'
70'	0.35	130'	115'	0.48	145'
80'	0.43	145'	130'	0.59	160'
90'	0.50	155'	140'	0.70	175'
100'	0.59	170'	150'	0.83	190'
110'	0.70	185'	165'	1.01	210'
120'	0.80	200'	175'	1.16	225'
130'	0.94	215'	190'	1.32	240'
140'	1.04	225'	200'	1.49	255'
150'	1.16	240'	210'	1.67	270'
160'	1.32	255'	225'	1.93	290'
170'	1.46	270'	235'	2.14	305'
180'	1.64	285'	250'	2.35	320'
190'	1.76	295'	260'	2.58	335'
200'	1.92	310'	270'	2.81	350'
210'	2.13	325'	285'	3.14	370'
220'	2.31	340'	295'	3.40	385'
230'	2.50	350'	310'	3.67	400'
240'	2.68	365'	320'	3.95	415'
250'	2.88	380'	330'	4.24	430'
260'	3.13	395'	345'	4.65	450'
270'	3.34	410'	355'	4.96	465'
280'	3.57	420'	370'	5.29	480'
290'	3.80	435'	380'	5.63	495'
300'	4.03	450'	390'	5.97	510'
310'	4.33	465'	405'	6.45	530'
320'	4.53	475'	415'	6.82	545'
330'	4.84	490'	430'	7.20	560'
340'	5.10	505'	440'	7.59	575'
350'	5.37	520'	450'	8.00	590'
360'	5.71	535'	465'	8.54	610'
370'	5.94	545'	475'	8.97	625'
380'	6.30	560'	490'	9.40	640'
390'	6.60	575'	500'	9.85	655'
400'	6.91	590'	510'	10.31	670'
410'	7.23	600'	525'	10.93	690'
420'	7.55	615'	535'	11.41	705'
430'	7.96	630'	550'	11.90	720'
440'	8.29	645'	560'	12.40	735'
450'	8.64	660'	570'	12.91	750'
460'	9.00	670'	585'	13.61	770'
470'	9.36	685'	595'	14.15	785'
480'	9.80	700'	610'	14.69	800'
490'	10.18	715'	620'	15.25	815'
500'	10.49	725'	630'	15.81	830'

TOWER HEIGHT	LAYOUT A			LAYOUT B	
	ACRES	A	B	ACRES	C
550'	12.59	795'	690'	19.01	910'
600'	14.89	865'	750'	22.50	990'
650'	17.39	935'	810'	26.28	1070'
700'	19.97	1000'	870'	30.36	1150'
750'	22.85	1070'	930'	34.73	1230'
800'	25.91	1140'	990'	39.40	1310'
850'	29.17	1210'	1050'	44.35	1390'
900'	32.62	1280'	1110'	49.61	1470'
950'	36.26	1350'	1170'	55.15	1550'
1000'	40.10	1420'	1230'	61.00	1630'
1050'	43.98	1485'	1290'	67.13	1710'
1100'	48.19	1555'	1350'	73.56	1790'
1150'	52.60	1625'	1410'	80.28	1870'
1200'	57.20	1695'	1470'	87.30	1950'

GENERAL NOTES

1. DUE TO VARIABLES INVOLVED IN ROOF AND OTHER INSTALLATIONS, IT SHALL BE THE RESPONSIBILITY OF THE CUSTOMER OR INSTALLER TO PROVIDE STRUCTURALLY ADEQUATE SUPPORTS FOR PIER AND ANCHOR CONNECTIONS. IT MAY ALSO BE NECESSARY FOR THE CUSTOMER OR INSTALLER TO SECURE THE SERVICE OF A LOCAL ENGINEER TO DETERMINE THAT THE INSTALLATION COMPLIES WITH LOCAL BUILDING CODES.

No.	Revision Description	Date	By
R3	REDRAWN; ADDED 550-1200' TOWERS; DELETED NOTES	07-13-87	GPW

UNR-Rohn

Title: LAND AREA REQUIREMENTS FOR 80% GUYED TOWERS

Scale: NONE

Unless otherwise specified, dimensions are given in inches. Tolerances: Decimals ±, Fractions ±, Angles ±

Drawn by: MEH Date: 04-08-75

Checked by: CH Date: 04-15-75

Approved by Engineering: CW Date: 04-15-75

Approved by Production: Date:

Approved by Sales: RAK Date: 04-16-75

Material: Finish: Weight:

File Number:

Drawing Number: C640531 R3

BRUNING 41503

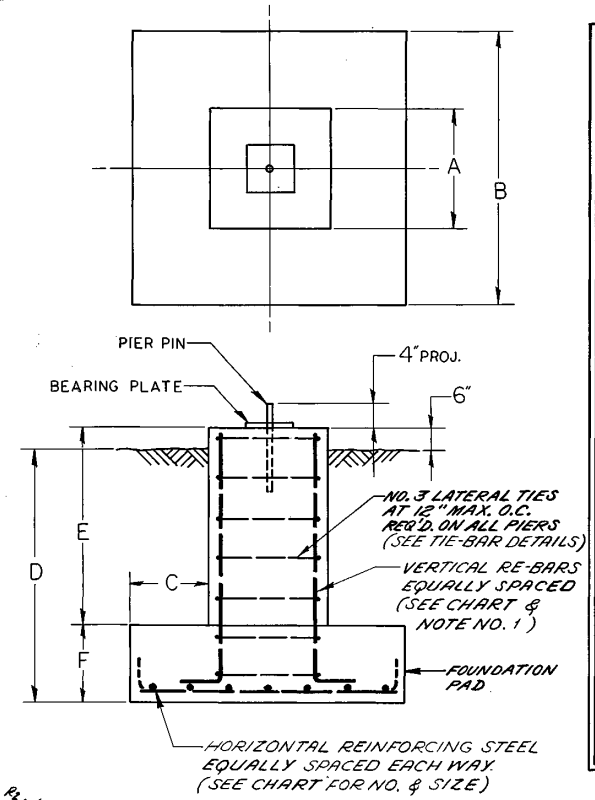

CONCRETE BASE SCHEDULE

CB NO.	TOWER BASE REACTION	DIMENSIONS A	B	C	D	E	F	BEARING PLATE	CONC. (CU. YDS)	VERTICAL BARS (NO. & SIZE)	HORIZ. BARS (NO. & SIZE)
1	14000	2'-0	2'-0	0	4'-0	0	0	BP 6	.70	4-NO.6	NONE*
2	22000	2'-6	2'-6	0	4'-0	0	0	BP 6	1.00	4-NO.6	NONE*
3	32000	3'-0	3'-0	0	4'-0	0	0	BP 6	1.50	4-NO.6	NONE*
4	44000	3'-6	3'-6	0	4'-0	0	0	BP 6	2.10	4-NO.6	NONE*
5	58000	2'-0	4'-0	1'-0"	4'-0	3'-3	1'-3	BP 6	1.22	4-NO.6	6-NO.4
6	74000	2'-0	4'-6	1'-3"	4'-0	3'-3	1'-3	BP 6	1.42	4-NO.6	6-NO.5
7	90000	2'-0	5'-0	1'-6	4'-6	3'-9	1'-3	BP 10	1.70	8-NO.6	6-NO.5
8	109000	2'-0	5'-6	1'-9	4'-6	3'-9	1'-3	BP 10	2.00	8-NO.6	6-NO.5
9	130000	2'-0	6'-0	2'-0	4'-6	3'-6	1'-6	BP 10	2.50	8-NO.6	7-NO.5
10	150000	2'-0	6'-6	2'-3	4'-6	3'-6	1'-6	BP 10	2.90	8-NO.6	8-NO.5
11	173000	2'-6	7'-0	2'-3	5'-0	3'-9	1'-9	BP 15	4.00	8-NO.7	8-NO.6
12	198000	2'-6	7'-6	2'-6	5'-0	3'-9	1'-9	BP 15	4.50	8-NO.7	8-NO.6
13	224000	2'-6	8'-0	2'-9	5'-0	3'-9	1'-9	BP 15	5.00	8-NO.7	9-NO.6
14	251000	3'-0	8'-6	2'-9	5'-0	3'-6	2'-0	BP 15	6.50	12-NO.7	9-NO.7
15	279000	3'-0	9'-0	3'-0	5'-0	3'-6	2'-0	BP 15	7.20	12-NO.7	10-NO.7

TIE BAR DETAILS

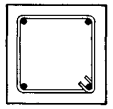

CB1 THRU CB6

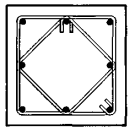

CB7 THRU CB13

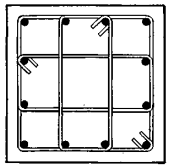

CB14 & CB 15

R2 NOTE: DUE TO VARIABLES INVOLVED IN ROOF AND OTHER INSTALLATIONS, IT SHALL BE THE CUSTOMER'S OR INSTALLER'S RESPONSIBILITY TO PROVIDE STRUCTURALLY ADEQUATE SUPPORTS FOR PIER & ANCHOR CONNECTIONS. IT MAY ALSO BE NECESSARY FOR THE CUSTOMER OR INSTALLER TO SECURE THE SERVICE OF A LOCAL ENGINEER TO DETERMINE THAT INSTALLATION COMPLIES WITH LOCAL BUILDING CODES.

GENERAL NOTES:

FOR REQUIRED MATERIAL SPECIFICATION, INSTALLATION NOTES AND TOLERANCES SEE DRAWING NUMBER B841300.

1. VERTICAL REINFORCING STEEL MAY BE PLACED WITH AN OPTIONAL STANDARD ACI 90° BEND AT BOTTOM.
2. BEARING PLATE PROVIDED ONLY ON TOWERS WITH TAPERED BASE.
*3. HORIZ. BARS IN CHART REFER ONLY TO THE BARS IN THE FOUNDATION PAD.

NO.	DESCRIPTION	DATE	BY
R2	ADDED NOTE	7-6-76	DH
R1	RE-DRAWN-SUPERSEDES C-610621D	2-26-75	DH
R6	REV. GEN. NOTES ADDED B841300 NOTE.	1-9-85	RKB
R5	ADDED GENERAL NOTE #9	1-21-80	JHD
R4	REMOVED RS-222-B FROM GEN. NOTE NO. 7.	3/7/77	GLS
R3	DELETE SIZE PIER PIN.	7/29/76	GLS

REVISIONS

ROHN® MANUFACTURING
DIVISION OF VARIAN

TITLE: CONCRETE BASE SCHEDULE

FILE NO.

SCALE ~ | MATERIAL | FINISH | WT.

DWN. BY D.H. DATE 2-26-75
CK'D. BY WDW DATE 3-7-75
APP'D. ENGRG. DATE 3-7-75
APP'D. BY DATE 3-15-75

UNLESS OTHERWISE SPECIFIED, DIMENSIONS ARE GIVEN IN INCHES.
TOLERANCES: DEC. ± FRAC. ± ANGLES ±

DWG. NO. C 610621 R6

GAF 880-250 2-72 48194

PRINTED IN U.S.A.

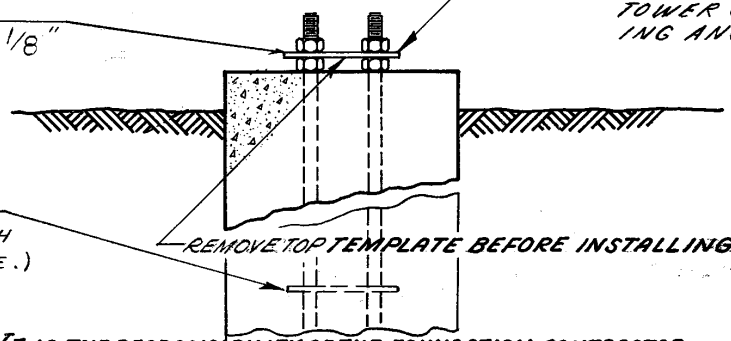

CHECK ANCHOR BOLT SIZE, NO., SPACING, & BOLT CIRCLE DIA. ON TEMPLATE AGAINST ANCHOR BOLT LAYOUT DRAWINGS BEFORE INSTALLATION.

NOTE: IT IS THE RESPONSIBILITY OF THE FOUNDATION CONTRACTOR TO VERIFY THAT THE CORRECT ANCHOR BOLT TEMPLATE AND FOUNDATION DIMENSIONS SHOWN ON RESPECTIVE SITE DRAWINGS ARE BEING USED.

NO.	DESCRIPTION	DATE	BY
R4	REVISED AND ADDED NOTE AS MARKED	8/13/82	RTC
R3	REVISED LEG SIZE	10/3/80	OH
R2	CORRECTED LEG SIZE	4/20/79	GLS
R1	ADD NOTE.	12/20/78	GLS

REVISIONS

ROHN® MANUFACTURING
DIVISION OF UNARCO INDUSTRIES

TITLE
ANCHOR BOLT TEMPLATE INSTALLATION

FILE NO.

SCALE ~	MATERIAL	FINISH	WT.
DWN. BY O.H.	DATE 4-7-73	UNLESS OTHERWISE SPECIFIED. DIMENSIONS ARE GIVEN IN INCHES.	
CK'D. BY T.S.	DATE 4-13-73	TOLERANCES	DWG. NO.
APP'D. ENGRG. CW	DATE 4-13-73	DEC. ± FRAC. ± ANGLES ±	B 730521 R5
APP'D. SALES HK	DATE 4-12-73		

R5	REVISED ANCHOR BOLT TEMPLATES	12-29-87	FHT/JHD

CITY BLUE PRINT 1000H 2-72 48191•

PRINTED IN U.S.A.

ID#	M	N	R
ABL4A1	4' 6-1/4	3' 11	2' 7-5/16
ABL4A2	4' 6-3/4	3' 11-7/16	2' 7-5/8
ABL4A3	6' 6-3/4	5' 8-3/16	3' 9-1/2
ABL4A4	8' 6-3/4	7' 5	4' 11-5/16
ABL4A5	10' 6-3/4	9'1-3/4	6' 1-3/16
ABL4A6	6' 6-1/4	5' 7-3/4	3' 9-3/16
ABL4A7	8' 7-3/4	7' 5-7/8	4' 11-15/16

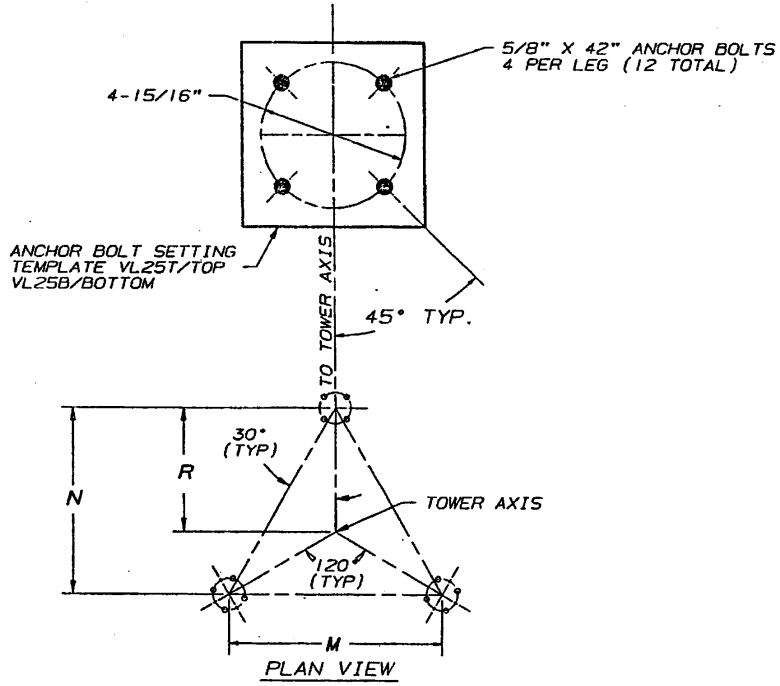

PLAN VIEW

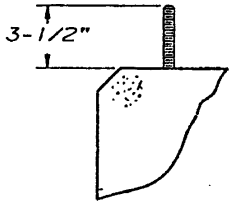

ANCHOR BOLT PROJECTION

NOTES

1. FOR ANCHOR AND FOUNDATION TOLERANCES REFER TO THE LATEST REVISION OF DWG. NO. A810214.
2. ALL ANCHOR BOLTS SHALL MEET OR EXCEED REQUIREMENTS OF ASTM A354 GR BC AND ARE HOOKED 180° AT THE BOTTOM.
3. WHEN FOUNDATIONS ARE DESIGNED BY OTHERS, IT SHALL BE THE RESPONSIBILITY OF THE PURCHASER'S FOUNDATION ENGINEER TO INSURE THAT THE ANCHORAGES PROVIDED ARE COMPATIBLE WITH THE PROPOSED FOUNDATION DESIGNS AND THAT THE CAPACITIES OF THE ANCHORAGES ARE NOT LIMITED BY THE STRENGTH OF THE FOUNDATIONS.
4. FOR ANCHOR BOLT TEMPLATE DETAILS SEE DRAWING B730521.

No. ▲ Revision Description ▲ Date ▲ Rev. By ▲ Ckd. By ▲ Appd. By

R O H N

Scale: NONE	By	Date
Drawn:	PJD	12/08/95
Checked:	JDW	1-2-96
App. Eng.:	TS	1-4-96
App. Sales:	H	1/4/96

Title: ANCHOR BOLT LAYOUT FOR (4) 5/8" DIAMETER ANCHOR BOLTS

ENG. FILE:

DRAWING NO.: C951721

ID#	M	N	R
ABL4B1	4' 7 1/4	3' 11 7/8	2' 7 7/8
ABL4B2	6' 7 1/4	5' 8 5/8	3' 9 3/4
ABL4B3	8' 7 1/4	7' 5 7/16	4' 11 5/8
ABL4B4	10' 7 1/4	9' 2 3/16	6' 1 7/16
ABL4B5	12' 7 1/4	10' 11	7' 3 5/16
ABL4B6	8' 6	7' 4 5/16	4' 10 7/8
ABL4B7	5' 0 1/2	4' 4 3/8	2' 10 15/16
ABL4B8	8' 8 1/4	7' 6 5/16	5' 0 3/16

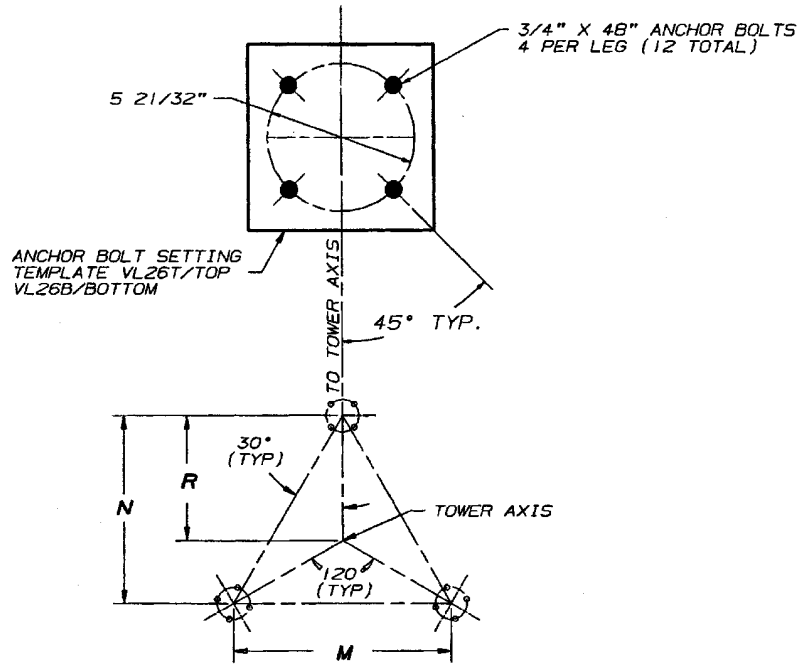

PLAN VIEW

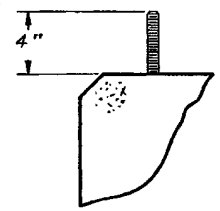

ANCHOR BOLT PROJECTION

NOTES

1. FOR ANCHOR AND FOUNDATION TOLERANCES REFER TO THE LATEST REVISION OF DWG. NO. AB10214.
2. ALL ANCHOR BOLTS SHALL MEET OR EXCEED REQUIREMENTS OF ASTM A354 GR BC AND ARE HOOKED 180° AT THE BOTTOM.
3. WHEN FOUNDATIONS ARE DESIGNED BY OTHERS, IT SHALL BE THE RESPONSIBILITY OF THE PURCHASER'S FOUNDATION ENGINEER TO INSURE THAT THE ANCHORAGES PROVIDED ARE COMPATIBLE WITH THE PROPOSED FOUNDATION DESIGNS AND THAT THE CAPACITIES OF THE ANCHORAGES ARE NOT LIMITED BY THE STRENGTH OF THE FOUNDATIONS.
4. FOR ANCHOR BOLT TEMPLATE DETAILS SEE DRAWING B730521.

No. ▲ Revision Description	▲ Date	▲ Rev By	▲ Ckd By	▲ Appd By

ROHN

Scale: NONE	By	Date
Drawn:	PJD	12/15/95
Checked:	DM	1-2-96
App. Eng.:	TS	1-4-96
App. Sales:	[illegible]	1/4/96

Title: ANCHOR BOLT LAYOUT FOR (4) 3/4" DIAMETER ANCHOR BOLTS

ENG. FILE:

DRAWING NO.: C951722

ID#	M	N	R
ABL4B1	4' 7 1/4	3' 11 7/8	2' 7 7/8
ABL4B2	6' 7 1/4	5' 8 5/8	3' 9 3/4
ABL4B3	8' 7 1/4	7' 5 7/16	4' 11 5/8
ABL4B4	10' 7 1/4	9' 2 3/16	6' 1 7/16
ABL4B5	12' 7 1/4	10' 11	7' 3 5/16
ABL4B6	8' 6	7' 4 5/16	4' 10 7/8
ABL4B7	5' 0 1/2	4' 4 3/8	2' 10 15/16
ABL4B8	8' 8 1/4	7' 6 5/16	5' 0 3/16

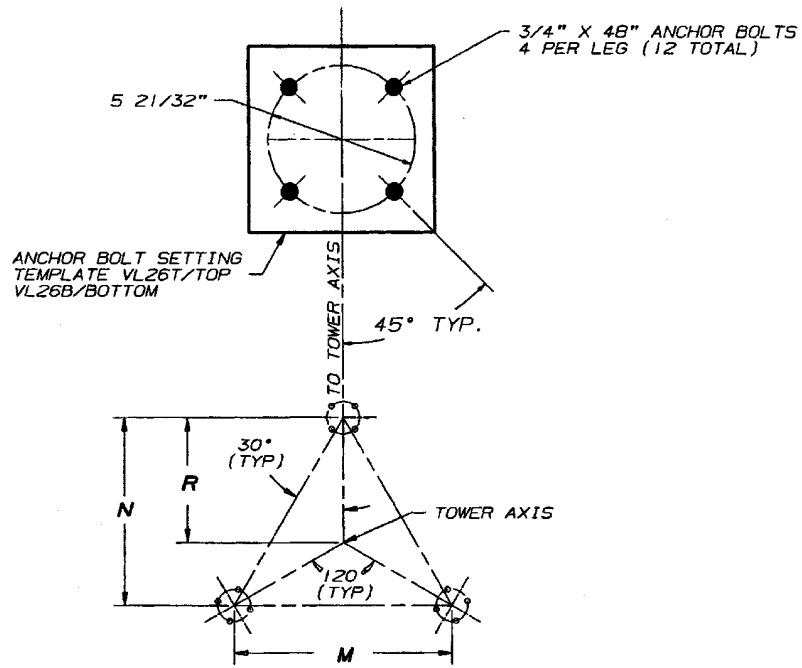

PLAN VIEW

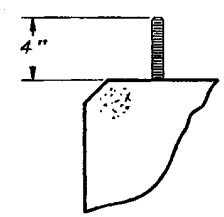

ANCHOR BOLT PROJECTION

NOTES

1. FOR ANCHOR AND FOUNDATION TOLERANCES REFER TO THE LATEST REVISION OF DWG. NO. AB10214.
2. ALL ANCHOR BOLTS SHALL MEET OR EXCEED REQUIREMENTS OF ASTM A354 GR BC AND ARE HOOKED 180° AT THE BOTTOM.
3. WHEN FOUNDATIONS ARE DESIGNED BY OTHERS, IT SHALL BE THE RESPONSIBILITY OF THE PURCHASER'S FOUNDATION ENGINEER TO INSURE THAT THE ANCHORAGES PROVIDED ARE COMPATIBLE WITH THE PROPOSED FOUNDATION DESIGNS AND THAT THE CAPACITIES OF THE ANCHORAGES ARE NOT LIMITED BY THE STRENGTH OF THE FOUNDATIONS.
4. FOR ANCHOR BOLT TEMPLATE DETAILS SEE DRAWING B730521.

No. ▲ Revision Description	▲ Date	▲ Rev By	▲ Ckd By	▲ Appd By

R O H N

Scale: NONE	By	Date
Drawn:	PJD	12/15/95
Checked:	JDM	1-2-96
App. Eng.:	TS	1-4-96
App. Sales:	[illegible]	1/4/96

Title: ANCHOR BOLT LAYOUT FOR (4) 3/4" DIAMETER ANCHOR BOLTS

ENG. FILE:

DRAWING NO.: C951722

ID#	M	N	R
ABL4D1	6' 9	5' 10 1/8	3' 10 3/4
ABL4D2	8'9	7' 6 15/16	5' 0 5/8
ABL4D3	10' 9	9' 3 11/16	6' 2 1/2
ABL4D4	12' 9	11' 0 1/2	7' 4 5/16
ABL4D5	14' 9 1/4	12' 9 1/2	8' 6 5/16
ABL4D6	16' 9 1/4	14' 6 5/16	9' 8 3/16
ABL4D7	18' 9 1/4	16' 3 1/16	10' 10 1/16
ABL4D8	20' 9 3/8	17' 11 15/16	12' 0
ABL4D9	22' 9 3/8	19' 8 3/4	13' 1 13/16
ABL4D10	24' 9 3/8	21' 5 9/16	14' 3 11/16
ABL4D11	8' 8 1/2	7' 6 1/2	5' 0 5/16
ABL4D12	10' 8 1/2	9' 3 5/16	6' 2 3/16
ABL4D13	12' 8 1/2	11' 0 1/16	7' 4 1/16
ABL4D14	14' 11 1/2	12' 11 7/16	8' 7 5/8
ABL4D15	17' 5 1/2	15' 1 7/16	10' 0 15/16
ABL4D16	19' 11 1/2	17' 3 7/16	11' 6 1/4
ABL4D17	22' 5 1/2	19' 5 3/8	12' 11 5/8
ABL4D18	24' 11 1/2	21' 7 3/8	14' 4 15/16
ABL4D19	27' 5 1/2	23' 9 3/8	15' 10 1/4
ABL4D20	29' 11 1/2	25' 11 5/16	17' 3 9/16
ABL4D21	8' 7 1/2	7' 5 5/8	4' 11 3/4
ABL4D22	10' 7 1/2	9' 2 7/16	6' 1 5/8
ABL4D23	12' 7 1/2	10' 11 3/16	7' 3 7/16
ABL4D24	14' 10 1/2	12' 10 9/16	8' 7 1/16
ABL4D25	12' 10	11' 1 3/8	7' 4 15/16
ABL4D26	14' 10 1/4	12' 10 3/8	8' 6 15/16

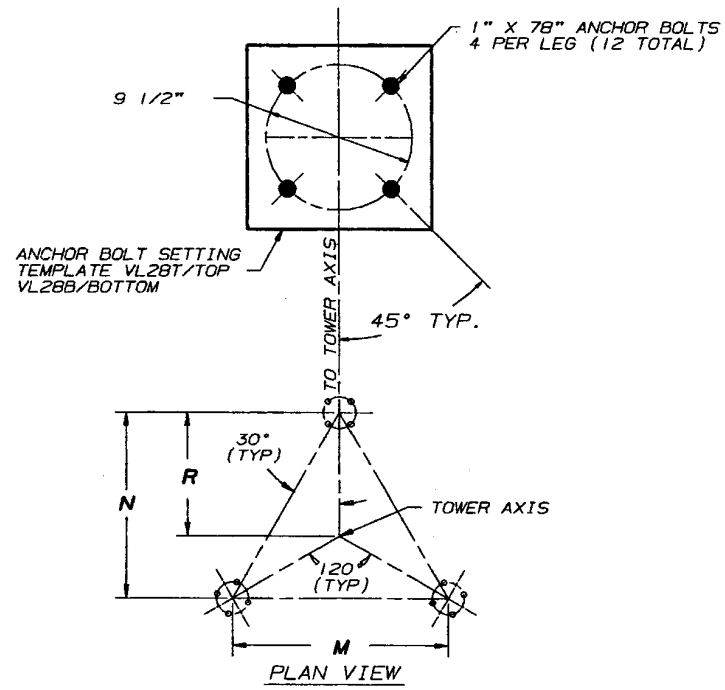

PLAN VIEW

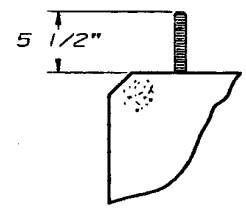

ANCHOR BOLT PROJECTION

NOTES

1. FOR ANCHOR AND FOUNDATION TOLERANCES REFER TO THE LATEST REVISION OF DWG. NO. A810214.
2. ALL ANCHOR BOLTS SHALL MEET OR EXCEED REQUIREMENTS OF ASTM A354 GR BC AND ARE HOOKED 180° AT THE BOTTOM.
3. WHEN FOUNDATIONS ARE DESIGNED BY OTHERS, IT SHALL BE THE RESPONSIBILITY OF THE PURCHASER'S FOUNDATION ENGINEER TO INSURE THAT THE ANCHORAGES PROVIDED ARE COMPATIBLE WITH THE PROPOSED FOUNDATION DESIGNS AND THAT THE CAPACITIES OF THE ANCHORAGES ARE NOT LIMITED BY THE STRENGTH OF THE FOUNDATIONS.
4. FOR ANCHOR BOLT TEMPLATE DETAILS SEE DRAWING B730521.

No.	Revision Description	Date	Rev By	Ckd By	Appd By
R1	REVISED ABL4D7 (N-DIMENSION)	4-10-96	PJD	JDM	

ROHN

Scale: NONE	By	Date
Drawn:	PJD	12/19/95
Checked:	JDM	1-2-96
App. Eng.:	TS	1-4-96
App. Sales:	AL	1-4-96

Title: ANCHOR BOLT LAYOUT FOR (4) 1" DIAMETER ANCHOR BOLTS

ENG. FILE:

DRAWING NO.: C951724R1

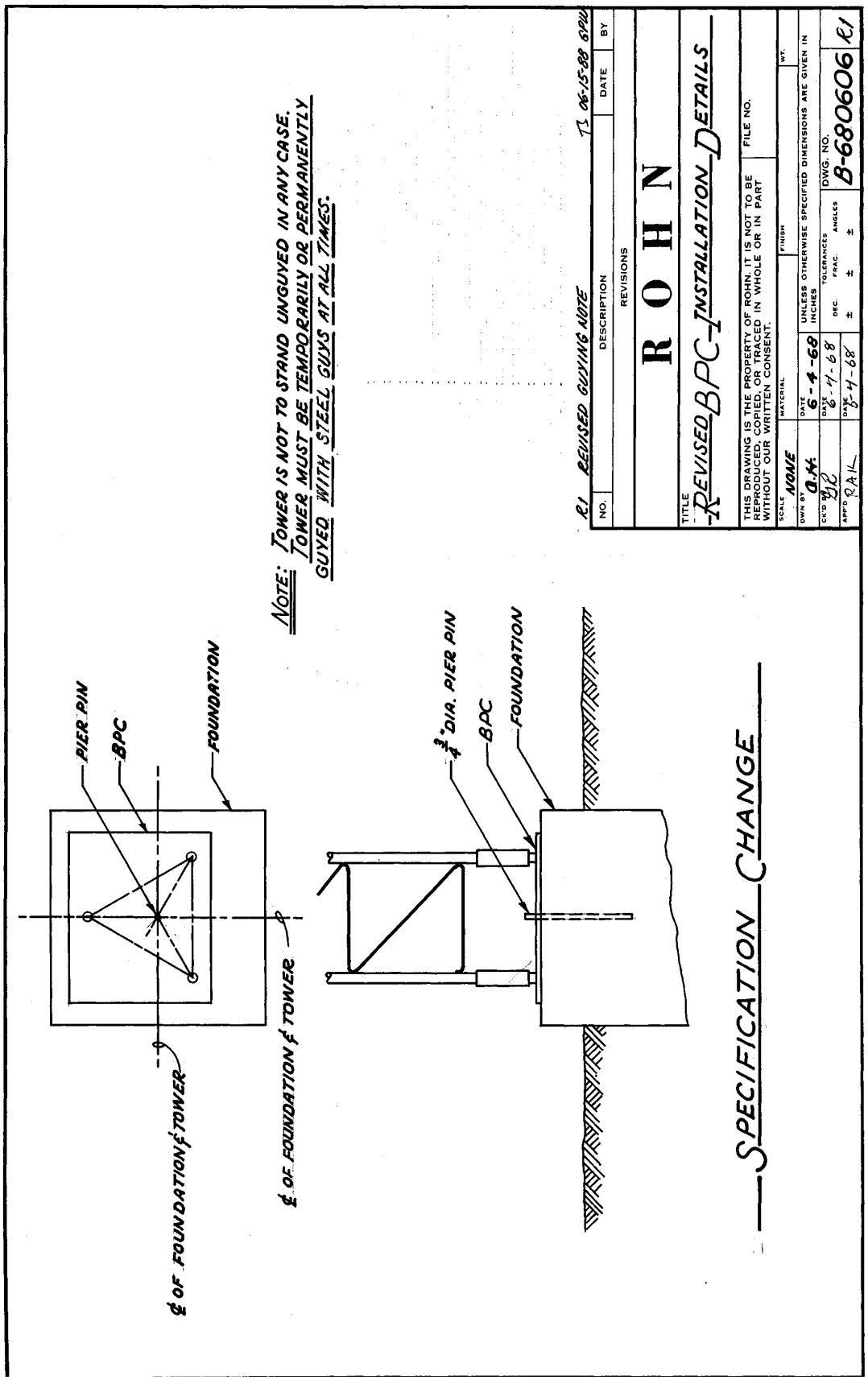
PIER PIN
BPC
FOUNDATION
℄ OF FOUNDATION ℄ TOWER
℄ OF FOUNDATION ℄ TOWER
NOTE: TOWER IS NOT TO STAND UNGUYED IN ANY CASE. TOWER MUST BE TEMPORARILY OR PERMANENTLY GUYED WITH STEEL GUYS AT ALL TIMES.
3/4" DIA. PIER PIN
BPC
FOUNDATION
R1 REVISED GUYING NOTE TS 06-15-88 GPW
NO. DESCRIPTION DATE BY
REVISIONS
ROHN
TITLE REVISED BPC INSTALLATION DETAILS
THIS DRAWING IS THE PROPERTY OF ROHN. IT IS NOT TO BE REPRODUCED, COPIED, OR TRACED IN WHOLE OR IN PART WITHOUT OUR WRITTEN CONSENT.
FILE NO.
SCALE NONE
MATERIAL
FINISH
WT.
DWN BY G.H. DATE 6-4-68
UNLESS OTHERWISE SPECIFIED DIMENSIONS ARE GIVEN IN INCHES
CK'D DATE 6-4-68
TOLERANCES DEC. ± FRAC. ± ANGLES ±
DWG. NO. B-680606 R1
APP'D DATE 6-4-68
SPECIFICATION CHANGE

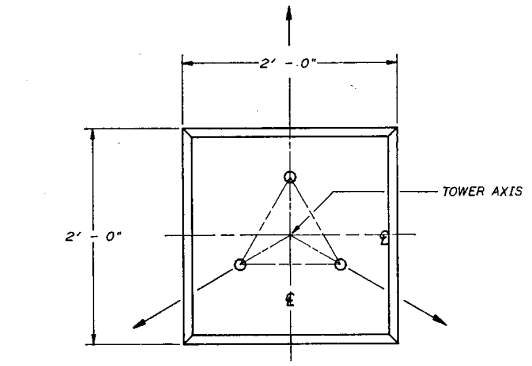

PLAN VIEW

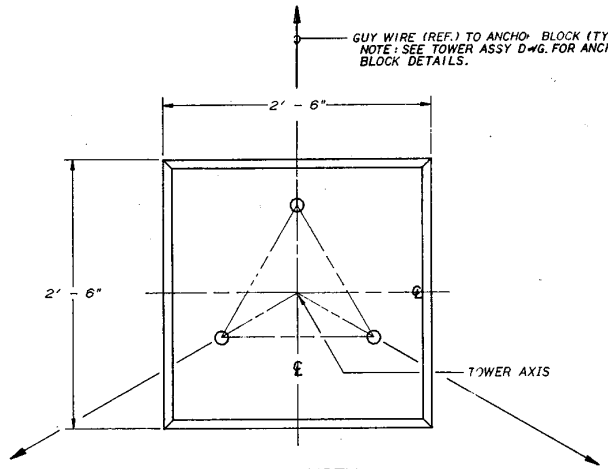

PLAN VIEW

GENERAL NOTES

1. See drawing number B841300 for general foundation notes except as noted.

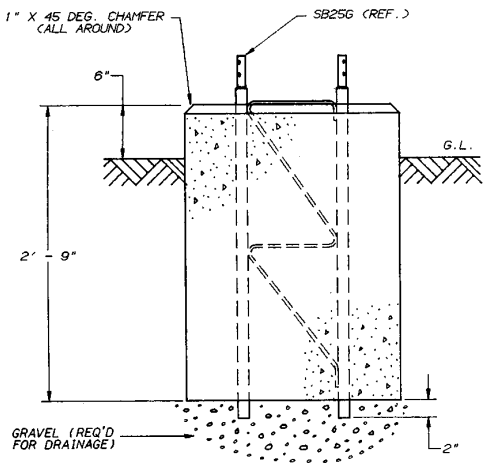

SHORT BASE DETAILS FOR 25G

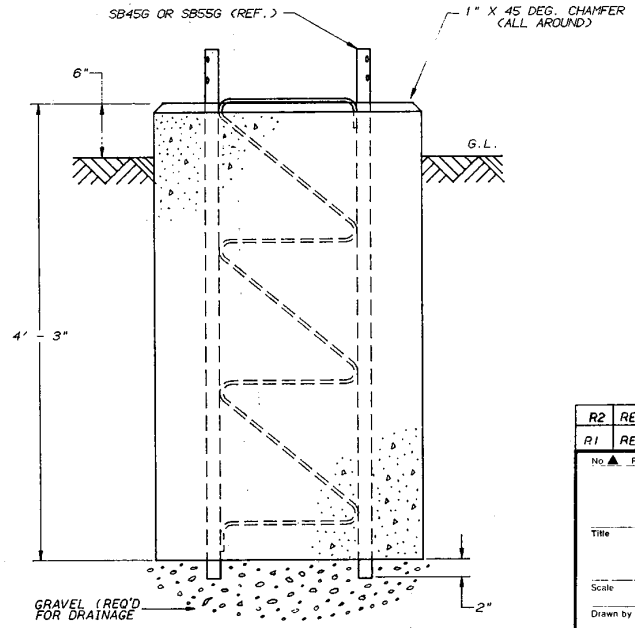

SHORT BASE DETAILS FOR 45G AND 55G

CONCRETE QUANTITIES

FOR 25G BASE PIER - 0.41 CU. YDS.
FOR 45G BASE PIER - 1.00 CU. YDS.
FOR 55G BASE PIER - 1.00 CU. YDS.

No.	Revision Description	Date	By
R2	REVISED GENERAL NOTES	4/13/85	RJB
R1	REV. NOTE 3 & ADD NOTE 4 AND GUY NOTE	3/26/85	LTL WRF

UNR-Rohn
Division of UNR, Inc

Title: SHORT BASE AND BASE PIER INSTALLATION DETAIL (FOR 25G, 45G AND 55G)

Scale: NONE
Drawn by: GPW Date: 03-12-85
Checked by: LTL Date: 3-12-85
Approved by Engineering: LWW Date: 3/28/85
Approved by Production: Date
Approved by Sales: Date

Unless otherwise specified dimensions are given in inches
Tolerances: Decimals ±, Fractions ±, Angles ±
Material, Finish, Weight

File Number
Drawing Number: C850506 R2

BRUNING

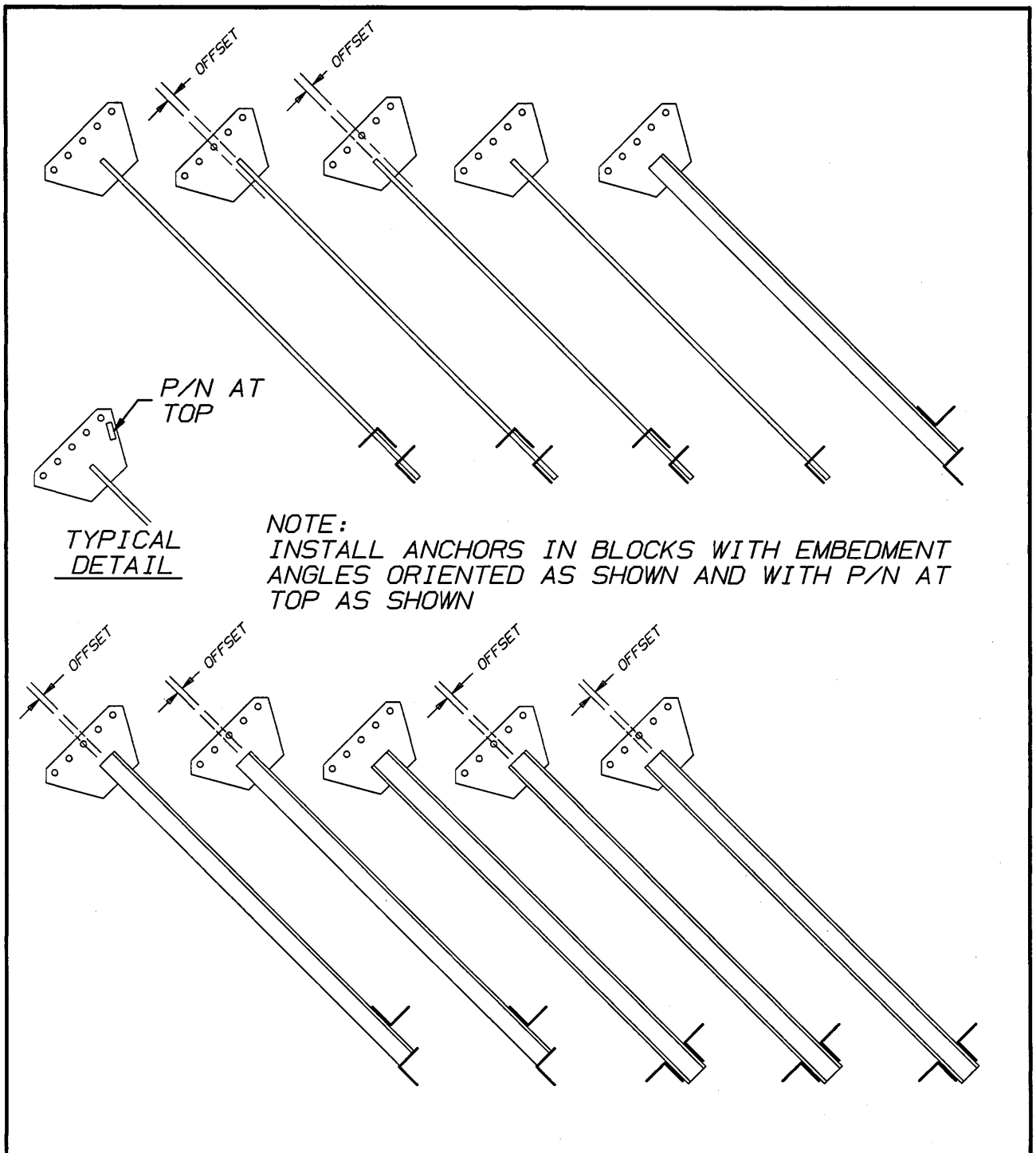

No. ▲ Revision Description	▲ Date	▲ Rev By	▲ Ckd By	▲ Appd By

ROHN

Scale: NONE	By	Date
Drawn:	WMN	9/8/95
Checked:	WRR	10-13-95
App. Eng.:	TS	10-18-95
App. Sales:	JR	10-18-95

Title: ANCHOR INSTALLATION DRAWING

ENG. FILE:

DRAWING NO.: A951409

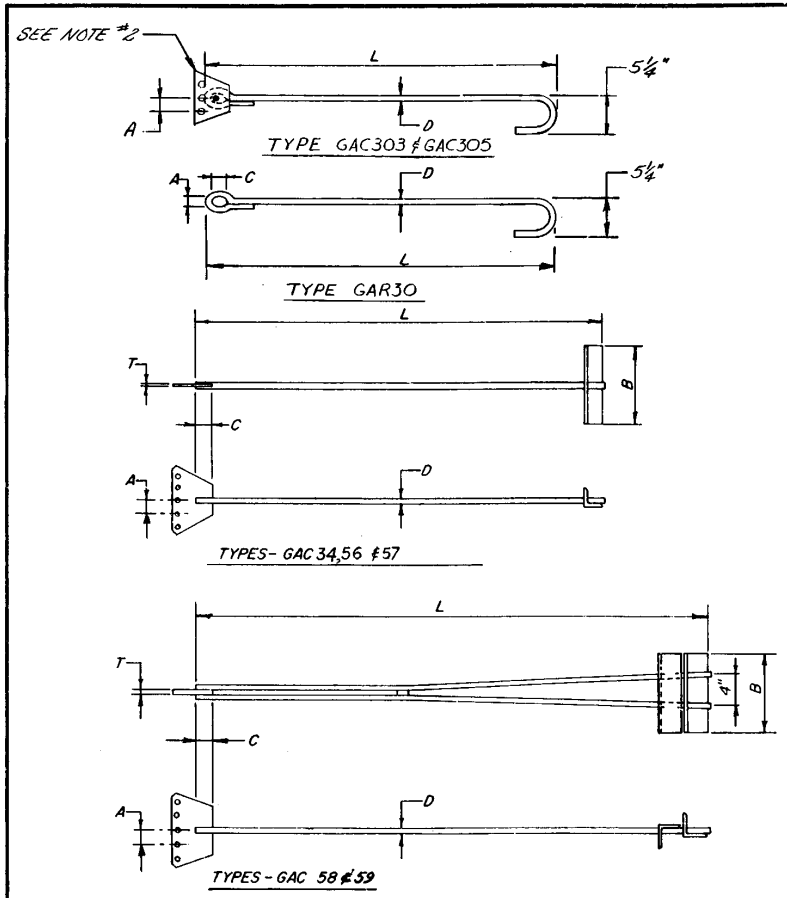

ANCHOR ROD DETAILS

ANCHOR ROD DATA

PART NUMBER	EQUALIZER PLATE TYPE	DIMENSIONS IN INCHES L	A	B	C	D	T	WEIGHT-LBS.	ALLOWABLE LOAD LBS. *
GAR 30	EYE	84	1	—	2	5/8	—	9	7,330
GAC 303	EE	84	2	—	—	5/8	3/16	13	7,330
GAC 305	EE	84	2	—	—	5/8	3/16	14	7,330
GAC 34 55TOP	EJ	84	2	12	2½	3/4	3/8	25	17,670
GAC 56 55TOP	EJ	120	2½	12	3	1¼	1/2	65	49,060
GAC 57 55TOP	EJ	168	3	12	4	1 7/16	3/4	125	64,800
GAC 58 55TOP	EJ	192	4	12	6	1¼	1	220	98,100
GAC 59 55TOP	EJ	240	4	18 (R)	6	1 7/16	1	310	129,700

* INCLUDES 33⅓ % INCREASE IN ALLOWABLE STRESSES

NO	DESCRIPTION	DATE	BY
R10	ADD "TOP" TO PART NO.	11-13-95	PJD
R9	REMOVED GAR25, GAC253 & GAC255 ANC. RODS	1-17-94	RKB
R8	REV. E.P. FROM 3 HOLE TO 5 HOLE	7-31-91	CSR
R7	REMOVED 5/16 DIA. HOLE	2-12-90	FHT
R6	DEL. A-RODS & REV. CAPACITIES	3-17-88	FHT
R5	ADD P/N GAR 30, GAC303 & GAC305	9-23-87	FHT
R4	"ALLOWABLE LOAD" WAS "LOAD CAPACITY" IN CHART	12-30-85	FHT
R3	REV. GAR 25 & GAC 25	2-16-83	DMT
R2	"A" DIMENSION WAS 12"	3/15/78	GLS
R1	REVISED #57 ROD D DIM. & CAPACITY	8-11-77	TS
D	DELETE #60 ROD, REVISE CAP. #25 ROD	1-15-75	DMT

REVISIONS

ROHN MANUFACTURING
A DIVISION OF UNARCO INDUSTRIES

TITLE: ANCHOR ROD SCHEDULE

FILL NO

SCALE: NONE
DWN BY: DM DATE: 3-22-73
CK'D BY: Dam DATE: 3-26-73
APP'D BY: CW DATE: 3-27-73
REV'D BY: DR DATE: 3-28-73
UNLESS OTHERWISE SPECIFIED DIMENSIONS ARE IN INCHES
DWG NO: C 660415 R10

4) TYPE-EJ EQUALIZER PLATES ARE USED WITH EYE & JAW TURNBUCKLES
3) TYPE-EE EQUALIZER PLATES ARE SUPPLIED IN PAIRS FOR EYE & EYE TURNBUCKLES.
2) PART NO. SUFFIXES- 1, 3, 5 & 55 DENOTES-1,3 OR 5 HOLES IN PLATES.
1) TYPE GAC303 RODS ARE SUPPLIED WITH TYPE EP25343 & EP25345 EQUALIZER PLATES (AS IS TYPE GAC30 ROD) & GAC305

PRINTED IN U

ROHN™ Products

Guying Information

Products for a Growing World of Technology

WIRE SIZE	ANCHOR ROD	TURNBUCKLE	THIMBLE
3/16 EHS	GAR30	5/8TBE&J	5/16THH
	GAC303, 305	3/8TBE&E	5/16THH
	GAC3455	1/2TBE&J	5/16THH
	GAC5655	5/8TBE&J	5/16THH
1/4 EHS	GAR30	5/8TBE&J	3/8THH
	GAC303, 305	1/2TBE&E	3/8THH
	GAC3455	1/2TBE&J	3/8THH
	GAC5655	5/8TBE&J	3/8THH
5/16 EHS	GAR30	5/8TBE&J	7/16THH
	GAC303, 305	5/8TBE&J	7/16THH
	GAC3455	5/8TBE&J	7/16THH
	GAC5655	5/8TBE&J	7/16THH
3/8 EHS	GAR30	5/8TBE&J	1/2THH
	GAC3455	5/8TBE&J	1/2THH
	GAC5655	5/8TBE&J	1/2THH

NOTE: THIS CHART APPLICABLE FOR E.I.A. REV. E GUY CHARTS ONLY

R2	REV'D EIA REV-D TO EIA REV-E	9-3-91	RKB	KR	TS
R1	ADDED GAC303, 305 TO 5/16EHS	7/25/89	JHD	WDU	TS

DRAWN BY: WDU DATE: 9/30/87
CHECKED BY: WRF DATE: 10/1/87
APPROVED BY: RAM DATE: 10/1/87
FILE NUMBER:
DRAWING NUMBER: A871382 R2

ROHN

TITLE: GUY WIRE HARDWARE CHART

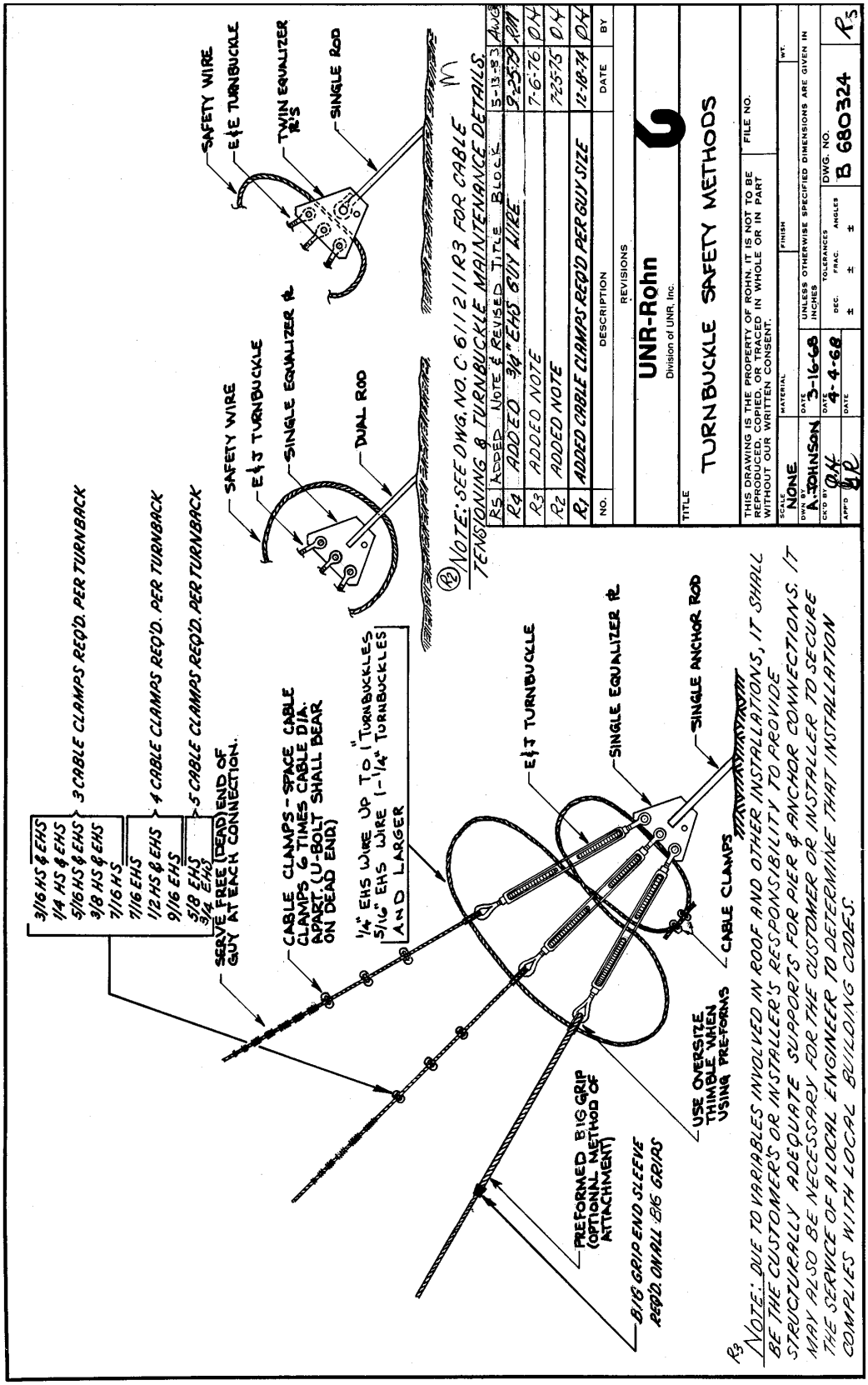
3/16 HS & EHS
1/4 HS & EHS
5/16 HS & EHS
3/8 HS & EHS
7/16 HS
7/16 EHS
1/2 HS & EHS
9/16 EHS
5/8 EHS
3/4 EHS
3 CABLE CLAMPS REQ'D. PER TURNBACK
4 CABLE CLAMPS REQ'D. PER TURNBACK
5 CABLE CLAMPS REQ'D. PER TURNBACK
SERVE FREE (DEAD) END OF GUY AT EACH CONNECTION.
CABLE CLAMPS - SPACE CABLE CLAMPS 6 TIMES CABLE DIA. APART. (U-BOLT SHALL BEAR ON DEAD END)
1/4" EHS WIRE UP TO 1" TURNBUCKLES
5/16" EHS WIRE 1-1/4" TURNBUCKLES AND LARGER
SAFETY WIRE
E & T TURNBUCKLE
SINGLE EQUALIZER PL
DUAL ROD
SAFETY WIRE
E & T TURNBUCKLE
TWIN EQUALIZER PL'S
SINGLE ROD
E & T TURNBUCKLE
SINGLE EQUALIZER PL
SINGLE ANCHOR ROD
CABLE CLAMPS
USE OVERSIZE THIMBLE WHEN USING PRE-FORMS
PREFORMED B/G GRIP (OPTIONAL METHOD OF ATTACHMENT)
B/G GRIP END SLEEVE REQ'D. ON ALL B/G GRIPS
R2 NOTE: SEE DWG. NO. C 6/12/11 R3 FOR CABLE TENSIONING & TURNBUCKLE MAINTENANCE DETAILS.
R3 NOTE: DUE TO VARIABLES INVOLVED IN ROOF AND OTHER INSTALLATIONS, IT SHALL BE THE CUSTOMERS OR INSTALLER'S RESPONSIBILITY TO PROVIDE STRUCTURALLY ADEQUATE SUPPORTS FOR PIER & ANCHOR CONNECTIONS. IT MAY ALSO BE NECESSARY FOR THE CUSTOMER OR INSTALLER TO SECURE THE SERVICE OF A LOCAL ENGINEER TO DETERMINE THAT INSTALLATION COMPLIES WITH LOCAL BUILDING CODES.
R5 ADDED 3/4" EHS GUY WIRE
R4 ADDED NOTE
R3 ADDED NOTE
R2 ADDED NOTE
R1 ADDED CABLE CLAMPS REQ'D. PER GUY SIZE
NO. DESCRIPTION DATE BY
REVISIONS
UNR-Rohn
Division of UNR, Inc.
TITLE
TURNBUCKLE SAFETY METHODS
THIS DRAWING IS THE PROPERTY OF ROHN. IT IS NOT TO BE REPRODUCED, COPIED, OR TRACED IN WHOLE OR IN PART WITHOUT OUR WRITTEN CONSENT.
FILE NO.
SCALE NONE
MATERIAL
FINISH
WT.
DWN BY A. JOHNSON DATE 3-16-68
UNLESS OTHERWISE SPECIFIED DIMENSIONS ARE GIVEN IN INCHES
TOLERANCES DEC. ± FRAC. ± ANGLES ±
DWG. NO. B 680324
R5
CK'D BY DATE 4-4-68
APP'D DATE

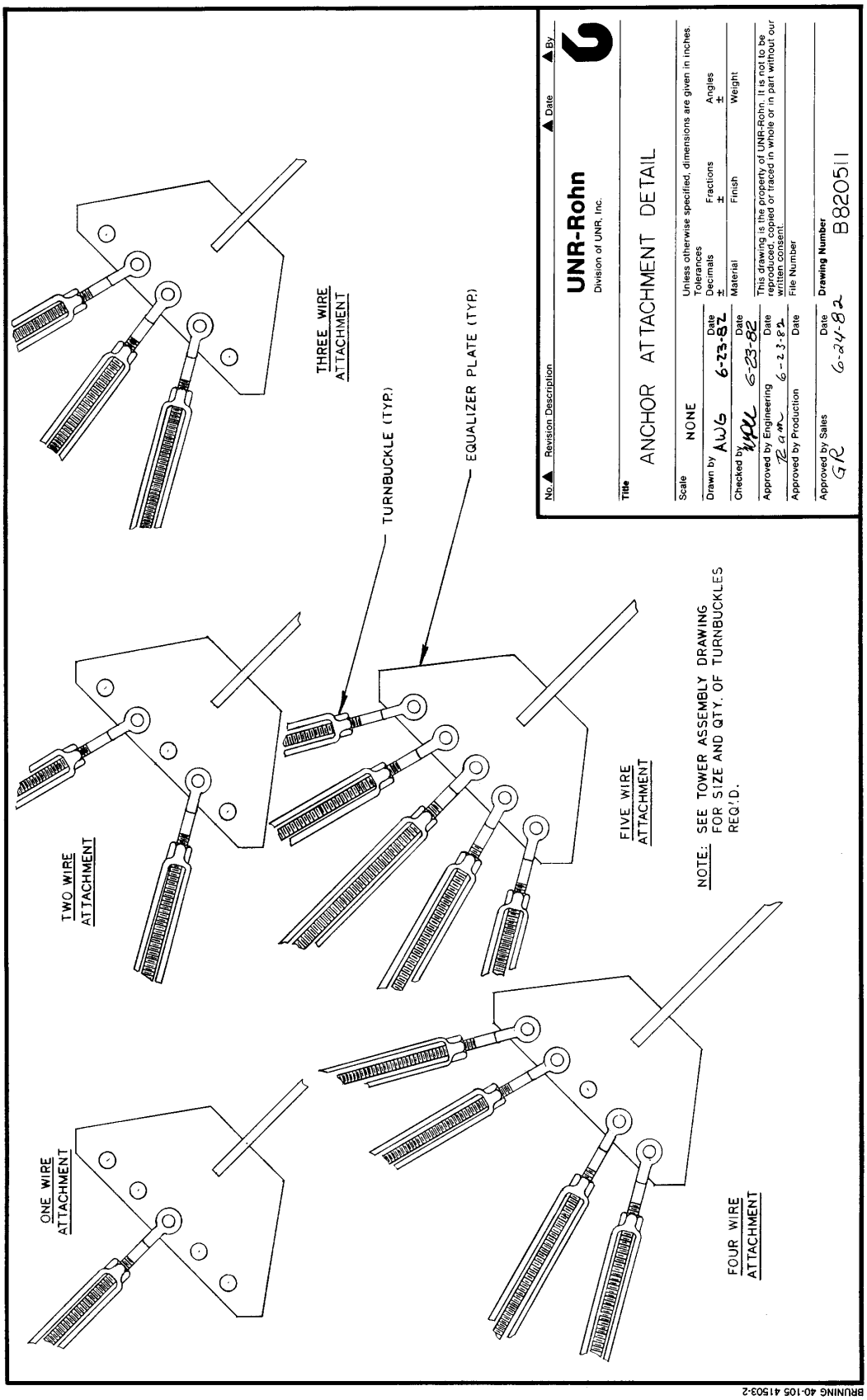
ONE WIRE ATTACHMENT
TWO WIRE ATTACHMENT
THREE WIRE ATTACHMENT
FOUR WIRE ATTACHMENT
FIVE WIRE ATTACHMENT
TURNBUCKLE (TYP.)
EQUALIZER PLATE (TYP.)
NOTE: SEE TOWER ASSEMBLY DRAWING FOR SIZE AND QTY. OF TURNBUCKLES REQ'D.
No. ▲ Revision Description ▲ Date ▲ By
UNR-Rohn
Division of UNR, Inc.
Title
ANCHOR ATTACHMENT DETAIL
Scale NONE
Unless otherwise specified, dimensions are given in inches.
Tolerances
Decimals ±
Fractions ±
Angles ±
Drawn by AWG 6-23-82 Date
Checked by 6-23-82 Date
Material
Finish
Weight
Approved by Engineering 6-23-82 Date
Approved by Production 6-23-82 Date
This drawing is the property of UNR-Rohn. It is not to be reproduced, copied or traced in whole or in part without our written consent.
File Number
Approved by Sales GR 6-24-82 Date
Drawing Number B820511
BRUNING 40-105 41503-2

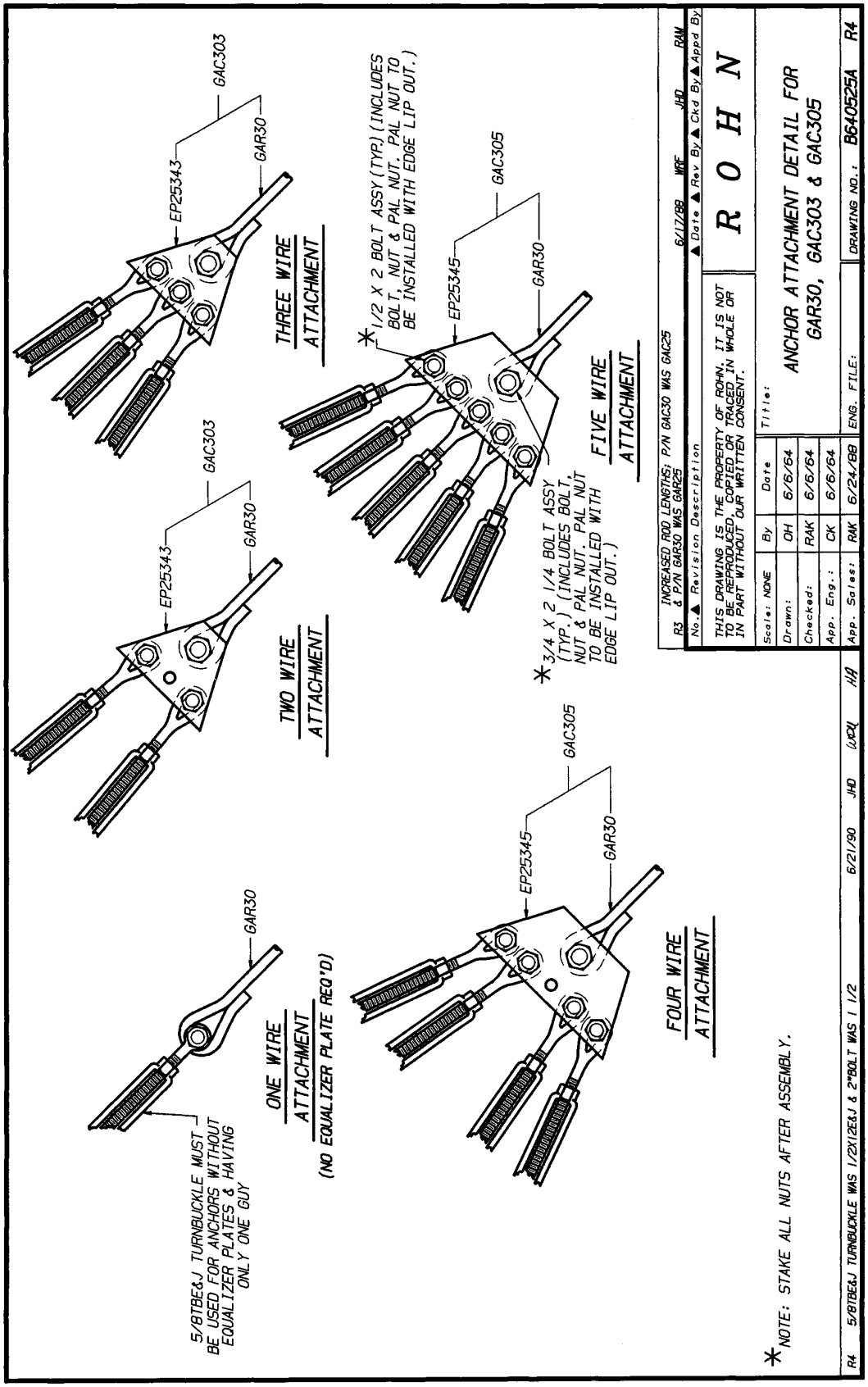
GAC303
GAR30
EP25343
THREE WIRE ATTACHMENT
*1/2 X 2 BOLT ASSY (TYP.) (INCLUDES BOLT, NUT & PAL NUT. PAL NUT TO BE INSTALLED WITH EDGE LIP OUT.)
GAC305
EP25345
GAR30
FIVE WIRE ATTACHMENT
GAC303
GAR30
EP25343
TWO WIRE ATTACHMENT
*3/4 X 2 1/4 BOLT ASSY (TYP.) (INCLUDES BOLT, NUT & PAL NUT. PAL NUT TO BE INSTALLED WITH EDGE LIP OUT.)
GAC305
EP25345
GAR30
FOUR WIRE ATTACHMENT
GAR30
ONE WIRE ATTACHMENT
(NO EQUALIZER PLATE REQ'D)
5/8TBE&J TURNBUCKLE MUST BE USED FOR ANCHORS WITHOUT EQUALIZER PLATES & HAVING ONLY ONE GUY
*NOTE: STAKE ALL NUTS AFTER ASSEMBLY.
INCREASED ROD LENGTHS; P/N GAC30 WAS GAC25
R3 & P/N GAR30 WAS GAR25
6/17/88 WRF JHD RAM
No. ▲ Revision Description ▲ Date ▲ Rev By ▲ Ckd By ▲ Appd By
THIS DRAWING IS THE PROPERTY OF ROHN. IT IS NOT TO BE REPRODUCED, COPIED OR TRACED IN WHOLE OR IN PART WITHOUT OUR WRITTEN CONSENT.
ROHN
Scale: NONE
Drawn: OH 6/6/64
Checked: RAK 6/6/64
App. Eng.: CK 6/6/64
App. Sales: RAK 6/24/88
Title:
ANCHOR ATTACHMENT DETAIL FOR GAR30, GAC303 & GAC305
ENG. FILE:
DRAWING NO.: B640525A R4
R4 5/8TBE&J TURNBUCKLE WAS 1/2X12E&J & 2"BOLT WAS 1 1/2 6/21/90 JHD LJCN HH

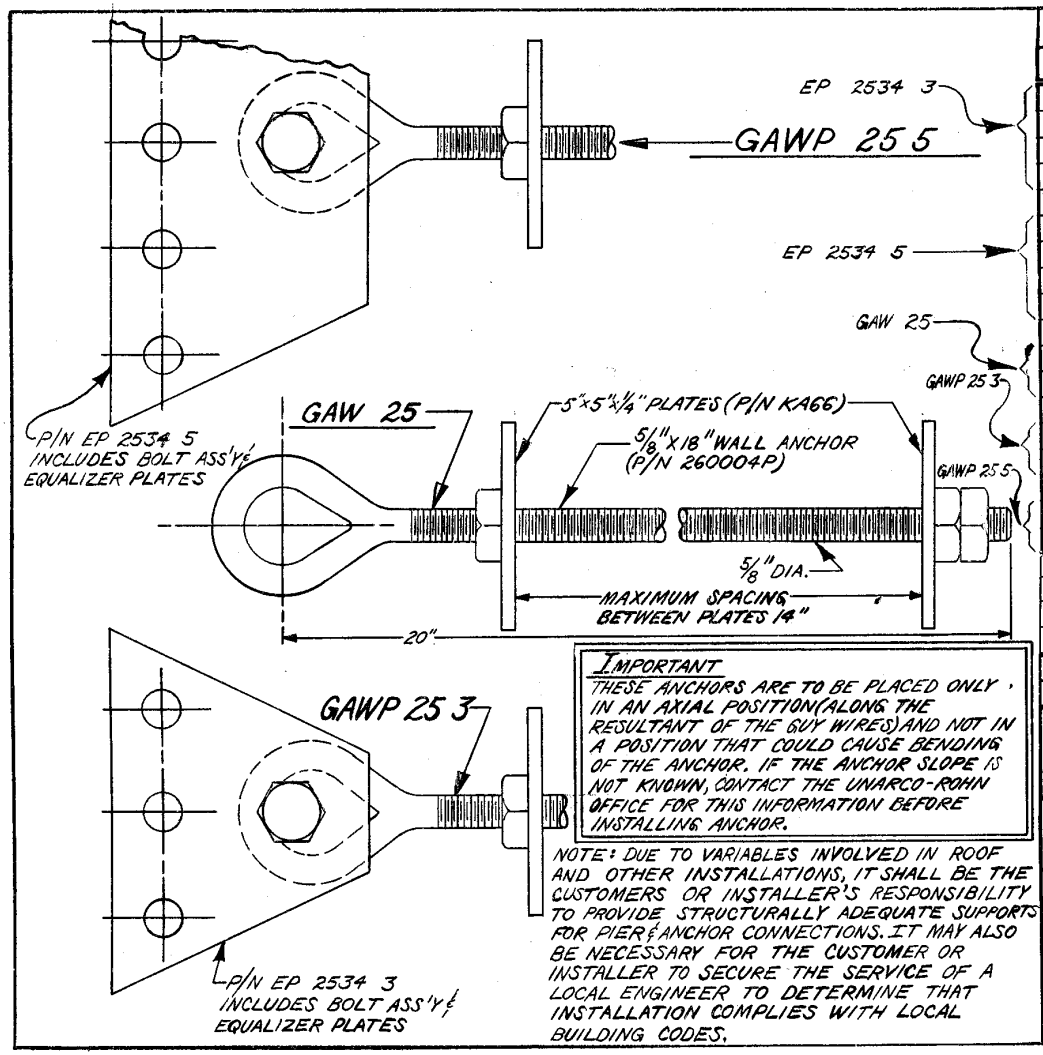

IMPORTANT
THESE ANCHORS ARE TO BE PLACED ONLY IN AN AXIAL POSITION (ALONG THE RESULTANT OF THE GUY WIRES) AND NOT IN A POSITION THAT COULD CAUSE BENDING OF THE ANCHOR. IF THE ANCHOR SLOPE IS NOT KNOWN, CONTACT THE UNARCO-ROHN OFFICE FOR THIS INFORMATION BEFORE INSTALLING ANCHOR.

NOTE: DUE TO VARIABLES INVOLVED IN ROOF AND OTHER INSTALLATIONS, IT SHALL BE THE CUSTOMERS OR INSTALLER'S RESPONSIBILITY TO PROVIDE STRUCTURALLY ADEQUATE SUPPORTS FOR PIER & ANCHOR CONNECTIONS. IT MAY ALSO BE NECESSARY FOR THE CUSTOMER OR INSTALLER TO SECURE THE SERVICE OF A LOCAL ENGINEER TO DETERMINE THAT INSTALLATION COMPLIES WITH LOCAL BUILDING CODES.

BILL OF MATERIAL

QUAN.	PART NO.	DESCRIPTION	DWG. NO.
2	EP25 3	3-HOLE EQUALIZER PL'S.	C 660416
1	210048GA	3/4"X2 1/4 BOLT ASS'Y	
3	210020GA	1/2"X 2" BOLT ASS'Y	
1	720004	PLASTIC BAG 6"X9"	
2	EP25 5	5-HOLE EQUALIZER PL'S.	C 660416
1	210048GA	3/4"X 2 1/4" BOLT ASS'Y.	
5	210020GA	1/2"X 2" BOLT ASS'Y	
1	720006	PLASTIC BAG 9"X13"	
1	260004P	5/8"X18" WALL ANCHOR	
2	KA66	5"X5"X1/4" RETAINER PL'S.	
1	EP 2534 3	EQUALIZER PLATE KIT	
1	GAW 25	WALL ANCHOR ASS'Y	
1	EP 2534 5	EQUALIZER PLATE KIT	
1	GAW 25	WALL ANCHOR ASS'Y	

NO.	DESCRIPTION	DATE	BY
R4	1/2 X 2" BOLT ASS'Y. WAS 1 1/2" LG.	9-21-88	
R3	ADDED NOTE	10-15-80	
R2	ADDED BILLS OF MATERIAL	6-2-77	
R1	ADDED NOTE	7-6-76	

REVISIONS

ROHN®

TITLE: WALL & ROOF ANCHOR

FILE NO.

SCALE ~	MATERIAL	FINISH	WT.
DWN. BY J.H.D.	DATE 6-21-77	UNLESS OTHERWISE SPECIFIED, DIMENSIONS ARE GIVEN IN INCHES.	
CK'D. BY D.L.	DATE	TOLERANCES DEC. ± FRAC. ± ANGLES ±	DWG. NO. B 710804 R4
APP'D. ENGRG.	DATE 8-5-71		
APP'D. SALES	DATE 8-6-71		

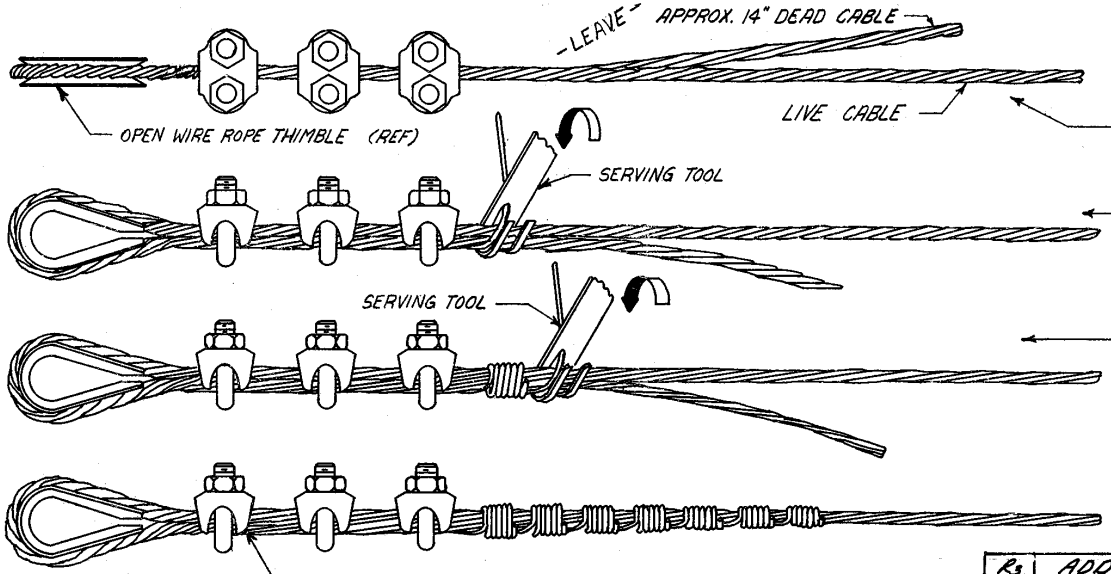

INSTRUCTIONS

1) SPACE CABLE CLAMPS OR FIST GRIPS 6X CABLE DIA. APART. (U-BOLT SHALL BEAR ON DEAD END)

2) UNWIND ONE STRAND FROM DEAD CABLE, APPLY SERVING TOOL, AND WRAP 6 TIMES AROUND.

3) UNWIND SECOND STRAND FROM DEAD CABLE, APPLY SERVING TOOL, AND WRAP 6 TIMES AROUND. REPEAT WITH EACH REMAINING STRAND.

4) COMPLETED CONNECTION CLIPPED AND SERVED EACH STRAND WOUND AROUND GUY CABLE SIX TIMES.

5) RETIGHTEN CABLE CLAMPS AFTER INITIAL TENSION HAS BEEN APPLIED.

R_3	ADDED FIST GRIPS	9-25-79	RM
R_2	ADDED NOTE	7-6-76	OH
R_1	REDRAWN	1-3-75	WR
NO.	DESCRIPTION	DATE	BY

REVISIONS

3/16 HS & EHS
1/4 HS & EHS
5/16 HS & EHS
3/8 HS & EHS
7/16 HS
} 3 CABLE CLAMPS OR FIST GRIPS REQ'D. PER TURNBACK

7/16 EHS
1/2 HS & EHS
9/16 EHS
} 4 CABLE CLAMPS OR FIST GRIPS REQ'D. PER TURNBACK

5/8 EHS
3/4 EHS
} 5 CABLE CLAMPS OR FIST GRIPS REQ'D. PER TURNBACK

R_2 NOTE: DUE TO VARIABLES INVOLVED IN ROOF AND OTHER INSTALLATIONS, IT SHALL BE THE CUSTOMER'S OR INSTALLER'S RESPONSIBILITY TO PROVIDE STRUCTURALLY ADEQUATE SUPPORTS FOR PIER & ANCHOR CONNECTIONS. IT MAY ALSO BE NECESSARY FOR THE CUSTOMER OR INSTALLER TO SECURE THE SERVICE OF A LOCAL ENGINEER TO DETERMINE THAT INSTALLATION COMPLIES WITH LOCAL BUILDING CODES.

ROHN® MANUFACTURING
DIVISION OF UNARCO INDUSTRIES

TITLE: CLIPPED AND SERVED GUY CABLE CONNECTION INSTRUCTIONS

FILE NO.

SCALE NONE	MATERIAL	FINISH	WT.
DWN. BY WR	DATE 1-3-75	UNLESS OTHERWISE SPECIFIED, DIMENSIONS ARE GIVEN IN INCHES.	
CK'D. BY OH	DATE 1-7-75	TOLERANCES DEC. ± FRAC. ± ANGLES ±	DWG. NO. B-690712
APP'D. ENGRG. CW	DATE 1-7-75		
APP'D. SALES AR	DATE 1-7-75		R_3

GAF 880-250 2-72 48191

PRINTED IN U.S.A.

TO ACHIEVE MAXIMUM COVERAGE WITH THE END SLEEVE, THE APPLICATION SHOULD BE CONDUCTED IN THE FOLLOWING MANNER:

(BE SURE TO SELECT PROPER SIZE END SLEEVE)

1

PLACE THE SLOT SIDE OF THE END SLEEVE OVER THE LONG LEG OF THE DEAD-END.

2

DRIVE THE SLEEVE DOWNWARD UNTIL THE RODS OF SHORT LEG ARE COMPLETELY COVERED.

3

THE RODS OF THE LONG LEG SHOULD BE EVEN WITH, OR MAY EXTEND ABOVE, THE TOP EDGE OF THE SLEEVE.

R1 REVISED GUY GRIP TO BIG GRIP 7-6-76 OH

NO.	DESCRIPTION	DATE	BY
	REVISIONS		

ROHN

TITLE APPLICATION PROCEDURE FOR BIG-GRIP END SLEEVE

FILE NO.

SCALE NONE	MATERIAL	FINISH	WT.
DWN BY H. ARCHANG	DATE 5-9-70	UNLESS OTHERWISE SPECIFIED DIMENSIONS ARE GIVEN IN INCHES	
CK'D BY B.C.	DATE	TOLERANCES DEC. ± FRAC. ± ANGLES ±	DWG. NO. B-700607 R1
APPD BY	DATE 5-9-70		

ROHN™ Products

Installation Information

Products for a Growing World of Technology

ROHN Installaion Information

Base: See appropriate ROHN catalog information. The first 10' section should be leveled, plumbed and temporarily guyed or braced while pouring the concrete. Do not pull tower after installation. Check tower to assure it is plumb and level after pouring concrete. Do not pull tower up into the concrete to level it and do not drive it hard into ground as this plugs leg holes and prevents moisture drainage. Crown the top of the concrete slightly to prevent water accumulation. Do not use drive rods as a base for tower when set in concrete.

Height of Tower and Bracket Uses: See appropriate ROHN catalog information. (Note: Tighten the house bracket U-Bolts only enough to prevent looseness. Do not dent or flatten the tower upright members by excessively tightening U-Bolts.)

Bolts: Nuts and bolts are located in tower legs on ROHN#20 and #25 towers. Installers are urged to use a 10" lining-up punch that tapers from about 3 mm to 6mm over 159 mm length. If bolts cannot be pushed through the holes with the heel of the hand while rocking the tower, do not hammer them through. Carefully drive the punch into the hole just enough to slightly enlarge it. The leg bolt hole should be just large enough to admit the bolt. Never drill out the holes. Be sure to tighten all leg bolts until they partially flatten the sleeves, causing the sleeves to actually grip the legs inside. Always replace stripped bolts. Upon completing an installation, there should be no vertical movement between tower sections at the joints when the tower is deliberately swayed from side to side.

Miscellaneous: Installation is greatly hastened and simplified with the use of an erection fixture. Do not us it to lift more than the weight of one tower section or any part of a section at one time. Erection fixtures are not intended to be used for lifting individuals. If the antenna is to be fixed and a set screw used in the mast housing, or if a rotator is to be mounted on a short length of mast above the tower top section, install a TB50 tower bushing at the bottom of th mast housing to center the mast in the mast housing. These bushings are "peened" in place. If the rotator is to mounted inside the top section of the tower, do not install a TB50 tower bushing at the bottom of mast housing. Anti-climb sections are recommended on all towers to prevent unauthorized persons from climbing tower. Towers are not to be used as ladders.

Caution: Be sure hinge bolts on hinged type accessories are loosened before attempting to hinge tower up or down. Hinge no more that 40' of #45 tower, 30' of #25 tower only. All hinged type bases are recommended to be used to raise tower only without antenna. When raising and lowering towie on any type of hinge base or hinge section, the loads applied for hinging the towers must be applied equally on both sides of tower in order to reduce the possibility of twist on tower and hinges at the base. Special care must be taken to avoid the use of raising and lowering methods which may cause damage to tower or hinges. Hinged bases should only be installed and dismantled by professional and experienced installers.

Roof installations have been excluded from the catalog. Local engineers must be consulted to determine adequate base and anchor details and wind loading criteria for all roof type installations.

Engineering services are available. See appropriate price sheet in a ROHN catalog.

Specifications subject to change without notice.

Towers and tower sections depicted in this catalog are examples presented as a reference guide. ROHN custom designs each individual tower for each specific installation from a large inventory of materials. Sections and parts in this catalog may be selected as part of that design.

The information contained herein does not purport to cover all details or variations in equipment nor provide for every possible contingency to be met in connection with installation, operation or maintenance. ROHN assumes no obligation to revise any of the information contained in this catalog if changes are made in criteria or evaluation techniques at a later date. Should particular problems arise which are not covered sufficiently herein for the purchasers purposes, the matter should be deferred to the ROHN home office.

Do not install towers and masts near power lines. All towers and masts should be installed twice the height of the installation away from power lines since every electrical wire must be considered dangerous.

ROHN recommends anti-climb sections on all towers to prevent unauthorized persons from climbing towers.

All tower s and masts should be installed and dismantled by experienced and trained personnel.

All types of antenna installations should be thoroughly inspected by qualified personnel and remarked with hazard and warning labels at least twice a year to ensure safety and proper performance.

All antenna installations must be grounded per local and national codes.

The mixing of co-called interchangeable copies of ROHN products is dangerous and voids all data or warranty supplied by ROHN. Materials used by the so-called copies are not the same quality and have not been tested or checked by ROHN to conform to the same quality standards. Mixing of non-ROHN item may endanger the lives of your customers and cause serious tower failures and financial misfortune for all concerned.

ROHN™ Products

EIA222 Tower Standards

Products for a Growing World of Technology

TIA/EIA STANDARD

Structural Standards for Steel Antenna Towers and Antenna Supporting Structures

TIA/EIA-222-F
(Revision of EIA/TIA-222-E)

June 1996

TELECOMMUNICATIONS INDUSTRY ASSOCIATION

STRUCTURAL STANDARDS FOR STEEL ANTENNA TOWERS AND ANTENNA SUPPORTING STRUCTURES
TABLE OF CONTENTS

Notice

TIA/EIA Engineering Standards and Publications are designed to serve the public interest through eliminating misunderstandings between manufacturers and purchasers, facilitating interchangeability and improvement of products, and assisting the purchaser in selecting and obtaining with minimum delay the proper products for his particular need. Existence of such Standards and Publications shall not in any respect preclude any member or nonmember of TIA/EIA from manufacturing or selling products not conforming to such Standards and Publications, nor shall the existence of such Standards and Publications preclude their voluntary use by those other than TIA/EIA members, whether the standard is to be used either domestically or internationally.

Standards and Publications are adopted by TIA/EIA in accordance with the American National Standards Institute (ANSI) patent policy. By such action, TIA/EIA does not assume any liability to any patent owner, nor does it assume any obligation whatever to parties adopting the Standard or Publication.

This standard does not purport to address all safety problems associated with its use or all applicable regulatory requirements. It is the responsibility of the user of this Standard to establish appropriate safety and health practices and to determine the applicability of regulatory limitations before its use.

(From Standards Proposal No. 3278, formulated under the cognizance of the TR-14.7 Structural Standards for Steel Antenna Towers and Antenna Supporting Structures Subcommittee)
Published by Telecommunications Industry Association 1996, Standards and Technology Department, 2500 Wilson Boulevard, Arlington, VA 22201
Price: Please refer to current Catalog of EIA, JEDEC, and TIA Standards and Engineering Publications or call Global Engineering Documents, USA and Canada (1-800-854-7179) International (303-397-7956)

ROHN™ Products

Antenna Support Questionnaire

Products for a Growing World of Technology

Form No. 95-2793T

ROHN® ANTENNA SUPPORT STRUCTURE QUESTIONNAIRE

Please complete or check all applicable spaces.

Customer: _____ Telephone No.: _____ Fax No.: _____

Address: _____ City: _____ State: _____ Zip: _____

Tower Site: _____ City: _____ County: _____ State: _____

Customer Contact: _____ Telephone No.: _____ Fax No.: _____

This structure is for: ☐ Material Only ☐ Material & Installation by ROHN (ROHN assumes normal site & access) ☐ Union Labor ☐ Non-Union Labor

Design assumes normal soil and rigidity per E.I.A., 80% guy radius, and level ground.

Foundation Installation: ☐ By Others ☐ By ROHN Provide sketch or azimuth of one leg _____

Type of Structure: ☐ Guyed ☐ Self-Supporting ☐ Bracketed ☐ Roof Mounted ☐ Concrete Pole ☐ Steel Pole

Structure Height: _____ (Feet/Meters) Building Code: _____

Base of Structure: ☐ Ground ☐ Roof at _____ ft. above grade

Design Load: ☐ Wind ☐ Basic ☐ Other ☐ Describe _____ Ice _____

Operational Load: Wind _____ Ice _____

EIA Operational Requirements: ☐ Yes ☐ No ☐ Other Explain _____

Step Bolts or Ladder: ☐ None Quantity: _____

☐ Inside ☐ Face ☐ Standard
☐ Outside ☐ Corner ☐ Heavy
☐ Step Bolts ☐ Leg ☐ Other

Safety Device: ☐ Rohn-Loc ☐ Other Explain _____

Obstruction Marking and Lighting: ☐ None

Aircraft Warning Lights: ☐ Yes ☐ No ☐ By Others Explain _____

☐ FAA ___ Number of Red/Strobe at Top
☐ Strobe - White Medium Intensity ☐ Strobe with Conduit
☐ Strobe - White High Intensity ☐ Conduit Clamps
☐ Red Lights and Strobe Lights ☐ Ice Shields
☐ ICAO 240V * (With B1R at Top 151′ - 492′)
☐ OBKIT 240V (Double Obstruction Light at Top)
☐ Alarm - Includes Indoor Control
(Specify Horizontal Distance Structure to Building _____)
*ICAO Kits with B1R are supplied with transformer and 120V bulbs

Paint: ☐ FAA ☐ Factory applied ☐ Sufficient Paint for Field Application

Vertical Waveguide Support: ☐ None ☐ Ladder ☐ Brace Brackets ☐ Conduit ☐ Other

Location of Vertical Waveguide Support: (If Preference) _____

Note: Unless otherwise indicated above, waveguide ladder on self-supporting MW sections will be mounted on the face of the tower near the tower leg. If center face mounted, additional brackets will be required.

Waveguide Bridge: Provide sketch or explanation _____

Platforms: ☐ Not Required ☐ Required (Provide elevation and description.) _____

Lighting Protection: ☐ None

Lightning Rod Required: ☐ No ☐ Yes If yes, quantity _____ If yes, extended type? ☐ Yes ☐ No
Downlead wire size _____

EIA Grounding: ☐ Yes ☐ No ☐ Special Explain: _____

ROHN® ANTENNA SUPPORT STRUCTURE QUESTIONNAIRE

Antenna Information: (UHF/VHF mounts must state type of mount and length of side arm, if applicable. Attach a separate sheet if necessary.)

Quantity	Model No., Size and Manufacturer	Freq. *	Elev. (2′ TOL. U.N.)	Azimuth if applicable	Antenna Mount Required			No. of Tiebacks	Ice Shield	Lines: Size Model & Qty.
					Yes	No	By Others (Describe)			

*Frequency of microwave dishes only.

Will ROHN be responsible for coax elbow complex or details? ☐ Yes ☐ No

The following data is required for special foundation designs:

1) Allowable bearing capacity
2) Boring log showing composition and variation with depth
3) Water table depth and variation
4) Type of foundation recommended (pile, spread footing, mat, etc.)
5) Uplift recommendations pertinent to the type or types of foundations recommended
6) Consistency of soil:
   A. Unconfined compression strength of cohesive soil (clay)
   B. Standard penetration - blows per foot
   C. Rock quality designation for rock
7) Allowable passive pressure in pounds per sq. ft. depth (PSF/FT)
8) Backfill considerations
9) Factors of safety included in allowable design values

Note:
1) Before any soil boring work begins, the soils engineer should contact ROHN for tower reactions, preferred boring locations, and any other data the soils engineer may require.
2) A detailed soils report, with proper foundation recommendations, will produce the most economical and safe foundation design.

Additional information, comments, or special requirements:

_____
_____
_____
_____
_____
_____
_____

Purpose of Tower: (Check One)

☐ Broadcast ☐ CATV ☐ Cellular
☐ Land Mobile ☐ Microwave ☐ PCS
☐ Wireless Cable ☐ Other (Please Specify) _____

Drawings: ☐ Are ☐ Are Not Required with Quotation

Prices requested are: ☐ For budgetary purposes ☐ Firm (Check One)

Submitted by:_____ Date: _____

Return completed form to: ROHN, 6718 West Plank Road, Peoria, Illinois 61604 USA

ROHN™ Products

Terms & Conditions

Products for a Growing World of Technology

Terms And Conditions Of Sale

General – In accordance with the usage of trade, we conclusively presume by the absence of any written objection and by the acceptance of part or all of the material ordered that:

- All proposals, negotiations, and representations regarding a transaction that are made prior to the date of this document, if any, are hereby merged into this document.
- All delivery prices are FOB our point of manufacture, unless otherwise specified.
- The agreement and language herein shall be construed and enforced in accordance with the laws of the Province of Ontario and the federal laws of Canada, applicable therein as of the date of e-mail confirmation of your order.
- A finance charge, at the monthly rate of 2%, will be assessed on past due invoices where allowed by applicable law.

Delay – We shall be excused for any delay in performance caused by acts of God, war, riot, embargoes, acts of civil or military authorities, fires, floods, accidents, quarantine restrictions, mail conditions, strikes, differences with workers, delays in transportation, shortages of cars, fuel, labor or materials or any other circumstances or causes beyond the control of our reasonable conduct of business.

Title and Risk of Loss – Full risk of loss, including transportation delays and losses, shall pass to you upon delivery of products to the FOB point. However, we retain title, for security purposes only, if all products are not paid in full in cash. In the event that you default in payments hereunder, we, at our option, may repossess all unpaid products and charge you with any deficiency.

Terms – Terms are net 30 days from invoice date on approved credit.

Credit Approval – Shipment, deliveries, and performance of work shall at all times be at the approval of your credit. We may at any time decline to make any shipment or delivery, or to perform any work, except on receipt of payment or security, or upon terms and conditions satisfactory to us.

Taxes – When we are required to collect or pay taxes under any existing or future law, the taxes shall be for your account, and you will, upon demand, make prompt payment of the amount thereof to us. Applicable taxes may be in regard to the sale, purchase, delivery, storage, processing, use or consumption of any products covered herein, including taxes based on the receipts from the sale thereof. Taxes are not included in any published or quoted price shown, unless specifically identified as such.

Warranty – All products are warranted to be free of defects in material and workmanship. The warranty is effective for two years, commencing on the date of shipment.

Buyer's Remedies – If the material furnished to you should fail, whether due to our negligent acts or omissions, to nonconformity, or otherwise, with these terms and conditions, or to any expressed or implied warranty, we shall replace such failed products at the original point of delivery. Instructions will be furnished to you for the disposition of the failed products, and any transportation charges involved in the disposition shall be to our account.

YOUR EXCLUSIVE AND SOLE REMEDY IN REGARD TO HAVING RECEIVED FAILED PRODUCTS, WHETHER DUE TO OUR NEGLIGENT ACTS OR OMISSIONS, TO NONCONFORMITY, OR OTHERWISE, WITH THESE TERMS AND CONDITIONS, OR TO ANY EXPRESSED OR IMPLIED WARRANTY SHALL BE TO OBTAIN REPLACEMENT AS SPECIFIED ABOVE. WE SHALL NOT IN ANY EVENT BE LIABLE FOR THE COST OF ANY LABOR EXPENDED IN ANY SUCH PRODUCTS, OR FOR ANY SPECIAL, DIRECT, INDIRECT, INCIDENTAL OR CONSEQUENTIAL DAMAGES DUE TO THE PRODUCT'S NONCONFORMITY WITH THESE TERMS AND CONDITIONS OR TO ANY EXPRESSED OR IMPLIED WARRANTY.

Cancellation – Orders accepted by us are non-cancellable by you unless agreed to in writing by us. If you provide a written request to cancel an entire order, or any portion thereof, and we agree in writing to such request, you will then be responsible for a reasonable fee reflecting the non-recoverable time and material costs, with reasonable profit, expended by us prior to cancellation. In no event shall this fee be less than 25% of the price of the materials or services cancelled.

Packaging for Shipment – The pricing for our products includes packing for standard ground domestic shipments, such as motor freight or package carriers. When special packaging is required for other means of shipment, such as for air shipment, ocean freight, etc., additional charges will apply and will be added to the order. Pricing for such special packaging will be furnished to you upon request.

Freight – Freight prices, if shown, are estimated for the stated mode of transportation and are based on tariffs and rates in effect at the time of the quotation. Freight charges are to your account. Point of delivery of all products is defined as the nearest dock or terminal used or arranged for by the appointed carrier, and that which is nearest to the construction site(s). Handling and further transportation from the defined point of delivery will be your responsibility unless specifically included in the quotation.

Customer-Specified Shipping Instructions and Freight Terms – We shall comply with the customer-specified shipping instructions and freight terms, provided they are stated in the written purchase order. On verbal purchase orders, we shall comply with the customer-specified shipping instructions and freight terms. However, in the event a confirming purchase order with different shipping instructions or freight terms is received after the order has shipped, the instructions and terms in the verbal purchase order will control. Written and verbal purchase orders that specify the destination, without specifying routing instructions and/or freight terms, will be shipped by a carrier and with freight terms (prepaid, collect, COD, etc.) of our choice.

Under no circumstances shall we be responsible or back-charged for the loss of customer freight advantages due to routing instructions and/or freight terms.

Return of Material

- Advance authorization must be obtained and the returned products accompanied by a Return Authorization (RA) number.
- When authorized, the products must be returned within 90 days after the shipment date, in the original package, if any, and otherwise be in new condition. Products are to be returned with the freight charges prepaid.
- When the above conditions are satisfied and the products are accepted by us, a credit will be issued for the products, less a 25% restock charge.

Shortage and Damage Claims – All claims of shortages and damage must be filed within seven days of receipt of material.

Engineering Terms & Conditions – All products shown in our catalog are intended to be used by personnel who are qualified, trained and experienced in the design and installation of communication structures and installations. A licensed professional engineer familiar with these structures must be consulted to perform thorough structural analysis prior to any installation. Please contact us if you wish to perform these types of analyses. Prior to installation, structures must be at least visually inspected for corrosion by personnel experienced in that field.

Prices and specifications are subject to change without notice.

Terms And Conditions Of Sale

1. All quotation, proposals, prices, or other terms are made for acceptance within 60 days (after 60 days, prices in effect at time of shipment will apply) and shipment within 60 days of purchase order date, unless otherwise stated. They are subject to change without notice, however, we invite your request for an extension. They are also subject to Credit and Marketing Department approval prior to acceptance. No other price protection is available.

2. Every effort will be made to maintain shipping schedules, either on Rohn equipment or via common carrier. Rohn cannot be responsible for delays in shipping caused by state or local agencies with regard to permits, routing, weather, detours, etc. All deliveries and schedules are contingent on availability of raw materials, fuel, and transportation. We will not be liable for damages on account of any delays or abnormalities caused in shipping due to causes beyond our reasonable control. Rohn reserves the right to make partial shipments and to submit invoices accordingly.

3. Changes or modifications to orders can be made only by written agreement executed by all parties affected thereby, which agreement shall include any price modification.

4. Rohn's responsibility ceases upon delivery of all shipments to the carrier. The unloading of all shipments is the responsibility of the customer, not the carrier or Rohn. Buyer is warned against receipting for merchandises until careful inspection has been made. Any claim made against Rohn must be made within 90 days after receipt of merchandise. All merchandise leaving Rohn's factory has been carefully inspected and Rohn does not assume responsibility for damages or shortages which occur in transit. Buyer must make all claims and report all damages and losses to the delivering transportation company.

5. No federal, state, or local taxes are included in quoted prices. All quotations, proposals, prices, or other terms are subject to increase without notification by the amount of any sales, excise, or other tax levied or charged to seller by any governmental agency and any such tax will be passed onto purchaser as a tax or as an addition to the selling price. This also applies to any costs incurred due to local statutes or governmental regulations.

6. Orders are not subject to cancellation by buyer except by written agreement with seller. Any order canceled, after any work has been done by Rohn, such as drawings, production, etc., will have a cancellation charge, to be determined solely at the discretion of Rohn for whatever work has been performed with a minimum of 20% of the purchase order price. If customer so chooses, he shall have the right to receive the material already performed at time of cancellation at the quoted price. If an order is canceled before any work has been done by Rohn, a $200 cancellation charge will apply.

7. Material received may not be returned by buyer except by written agreement with seller. In all cases, permission must be secured from Rohn prior to the returning of any goods for credit. All returned goods are subject to a minimum service charge of 20%, plus all transportation charges, and are subject to inspection by Rohn. Returned goods will be offered and paid for only upon proof of purchase (i.e. invoice no.) and credit will be issued against invoice value. Rohn reserves the sole right to determine amount of credit to be issued on all goods returned for credit. Only standard, currently manufactured Rohn products may be considered for return and credit. Unsaleable products will be scrapped and no credit will be received. If returned goods are determined to have no value and buyer wishes them returned, the buyer will be charged return freight. Safety equipment, erection equipment, insulators, transformers, nuts and bolts are not returnable.

8. Rohn warrants the commercial items of its manufacture only, be reasonably fit for the purpose for which they are manufactured and sold, provided, however, that this warranty shall be effective only if purchaser installs all material according Rohn's recommendations and specifications and that purchaser during the warranty period shall regularly, not less than semi-annually, inspect and properly maintain all items. Any item found unfit for its purpose within 12 months from date of delivery will be repaired or replaced free of charge, F.O.B. Rohn's plant. Rohn shall be immediately notified in writing of such unfitness.

Rohn reserves the sole right to determine if any material is to be repaired or replaced free of charge or to be supplied at Rohn's standard prices. Such obligation shall be limited to parts returned for inspection, properly packed and expenses prepaid, and providing inspection shall satisfactorily indicate defects.

The warranty herein made is in lieu of all other warranties and, except as expressly stated herein, Rohn does not make and there are no warranties or obligations of any kind of nature whatsoever either expressed or implied including, but not restricted to, warranty or obligations as to product, material, workmanship, or manufacture or as to the use of the items covered hereby. Rohn shall not under any circumstances be liable to third persons for any claims or damages including direct, special, indirect, or consequential damages for any reason. The buyer agrees to indemnify and to hold Rohn harmless for, of, and from any loss, claims, damages, expenses and attorney's fees, including but not limited to, any fines, penalties and corrective measures Rohn may sustain by reason the Buyer's failure to comply with said laws, ruled, and regulations in connection with the performance of this sale.

The above warranty applies only to items manufactured by Rohn. Items not manufactured by Rohn are warranted and guaranteed only to the extent and in the manner warranted and guaranteed to Rohn by the manufacturer of such items and then only to the extent Rohn is liable to enforce such warranty or guaranty.

Rohn will assume no responsibility for the adequacy of any product if material is used which is not totally supplied by Rohn. The above sets forth the only warranty made by Rohn in connection with items manufactured or sold by it, and any provisions in any proposals, specifications, advertising, or other provisions hereof, are merely descriptive and are not to be construed as warranties made by Rohn. All warranties are void on drawings made by others, whether by professional engineer, sealed or not, that are not rechecked by Rohn and approved by Rohn. Rohn assumes no liability for the adequacy of the drawings or the product.

9. Rohn reserves the right to change or modify the product and construction of any product manufactured by Rohn and to substitute material equal to or superior to that originally specified.

10. Buyer agrees not to disclose or make available to any third party processes, drawings, specifications, reports, photographs, data and other technical or proprietary information relating to Rohn products without obtaining prior written consent of Rohn.

11. No proposal, order, quotation, or acceptance may be changed or varied by verbal agreement, and all orders are accepted only under the provisions set forth herein.

12. Purchase orders and requests for quotations must be submitted in writing to Rohn. It is the responsibility of the Buyer or Buyer Representative to provide Rohn design loading criteria (wind load, antenna load, geotechnical information, etc.) based on site-specific data in accordance with ANSI/EIA-222 (latest revision). This information must be verified by others prior to installation.

13. If outside source inspection, assembly, etc. is required prior to shipment of an order, $50.00 per man hour (plus equipment time, if applicable) is chargeable, with $300.00 as a minimum.

14. Any welding inspection required by customer or customer's specifications must be done at Rohn's plant prior to packing and shipment of material from Rohn's plant.

15. A minimum charge of $25.00 will be billed for special handling and preparation of material for air shipments. 16. Rohn reserves the right to apply all remittances and credit memos to the oldest outstanding balance in your account. No credits will be issued for any reason against a purchase order whose billing is more than 90 days old. Customer corrections or complaints must be made within this period of time.

17. Standard catalog prices do not include special drawings or product evaluations. If any are required, there will be a charge.

18. Rohn at all times reserves the right to take pictures of any or all of its products after installation for advertising purposes, except those which are under classified governmental control.

19. The customer will be responsible for any extra charges incurred on prepaid shipments. Any special item ordered and shipped from Reno, Bessemer, Frankfort, or Bridgeport will incur a 10% inbound freight, plus 7% warehouse and handling charge, and will be shipped F.O.B. shipping point.

20. A service charge not to exceed 1-11.2 % per month or maximum allowable per State law will be billed on all accounts not paid within 30 days of invoice date.

21. Minimum total net worth of merchandise which can be ordered is $100.00. Any orders placed for less will be billed at $100.00

22. Any purchase order, which is placed under a "hold order" for over five (5) days by the customer for any reason, will be subject to a 1% per month storage charge, plus a 1-11.2 % per month interest charge for a total of 21.2 % per month from the date of the hold until the order is released.

23. All CIA requirements must be met with certified checks or money orders to insure prompt shipment.

24. All expenses incurred by Rohn during any collection effort shall be charged to the customer.

Prices and specifications are subject to change without notice.

ROHN™ Products

Safety Information

Products for a Growing World of Technology

SAFETY INFORMATION

THIS INFORMATION MAY SAVE YOU FROM DEATH OR INJURY!

DO NOT ATTEMPT TO INSTALL OR DISMANTLE ANY ROHN PRODUCTS UNTIL YOU HAVE READ AND UNDERSTOOD THE INFORMATION IN THIS DOCUMENT.

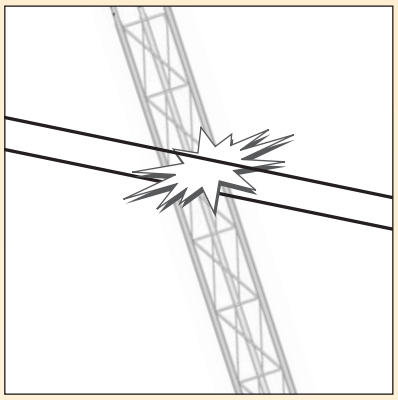

ELECTROCUTION HAZARD

Do not attempt to install or dismantle ROHN products near any type of power line. Should your installation come into contact with power lines, **you can be killed!** Be sure your installation is out of falling distance of any overhead wires - including the lead to any building. Read all instructions carefully before you begin, or better yet, call a professional - it may save your life. See inside of this brochure for more information.

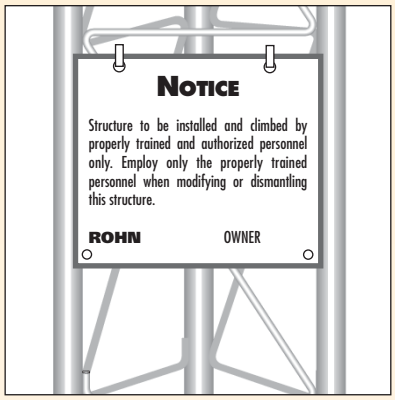

WARNING SIGNS REQUIRED

This notice sign must be attached to all poles, towers and bases in a location which is conspicuous and readable from the ground so that all personnel are notified and warned. On large self-supporting towers, signs must be attached on all three legs (if they are climbable) or on the ladder. Aluminum wire is furnished for attaching signs. Radian recommends you check frequently to make sure the sign has not been removed. These 6" x 9" signs may be ordered prepaid for $6.00 each. Specify part numbers ACWS.

Tower Erectors - Please see that these signs are attached per the instructions above before leaving the site.

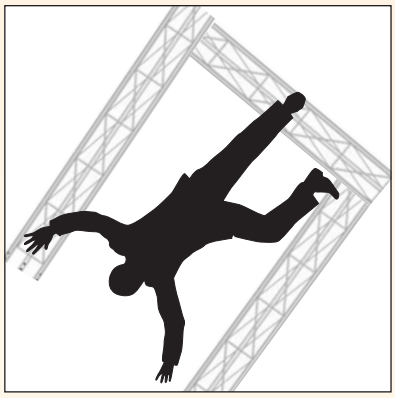

FALL HAZARD

Guyed towers are not self-supporting at any height. When installing or dismantling a guyed tower always consult your local tower installer. The condition of a used tower is difficult to determine and in the process of dismantling you could be killed or injured. Dismantling and installation may require the use of temporary steel guys.

General Information and Precautions

If you need help from Radian

Field technicians, warning labels, catalogs, guy charts, etc. are available from Radian.

If you are selling ROHN Products

Due to government regulations, be sure you and your customers are informed as to proper use when purchasing any antenna supporting structure.

Mixing of products

The mixing of so-called interchangeable copies of ROHN products with ROHN products is dangerous and voids all engineering or warranty data supplied by Radian. Materials used by the so-called copies are not the same quality and have not been tested or engineered by Radian to conform to the same quality standards. Mixing of ROHN items may endanger lives and cause serious failures and financial misfortune for all concerned.

Who should install or Dismantle ROHN products

Installing, dismantling and rigging ROHN products requires specialized skills and experience. Information supplied by Radian assumes that all products will be installed or dismantled by personnel having these skills and having worked with similar products before. No one should attempt to install or dismantle ROHN products without these skills and experience.

Radian assumes no liability if faulty or dangerous practices are used. There are available trained and experienced personnel to assist in installation, maintenance, and disassembly. Contact your local installer if consultation or assistance is required.

What about used material

Radian does not recommend or warrant in any way the use of used materials. The use of used materials voids all warranties set forth by Radian because no one knows if the used material has been misused, overloaded, or damaged. If, for some reason, materials are re-used, all new, galvanized, high strength bolt assemblies must be used.

General precautions

Radian recommends anti-climb sections on all structures to prevent unauthorized persons from climbing.

Installation and dismantling may require the use of temporary steel guys.

All installations must be grounded per local and national codes.

All types of installations must be thoroughly inspected by qualified personnel and re-marked with hazard and warning labels at least once a year to ensure safety and proper performance.

Radian makes available many items which may or may not be required for your particular installation. Some items available in various types and sizes are safety climbing devices, ladders, safety cages, anti-climb devices, work platforms, F.A.A. painting and lighting, grounding, and fencing. Special product services and special packaging are also available.

Based on local, state, or federal laws and building codes for your area, it may be necessary for your particular installation to have special items or be given special consideration. If there are any special requirements for your particular installation, be sure to include them in your request for quotation and on your order form. Radian cannot be responsible for any omission at any time.

About OSHA

Due to the Occupational Safety and Health Act regulations, parts are available incorporating features which will permit a safe product.

It is a policy of Radian to design and make our products safe to use without hazards to people and/or property.

We ask that you list specific requirements you wish us to comply with in accordance with the intended use of a product. These requirements may or may not affect the price of the materials and equipment under consideration for purchase.

We would be happy to answer any additional questions you may have.

About step bolts

Towers and poles may or may not include step bolts. Step bolts are supplied as a convenience during construction.

If your structure has step bolts, the spacing at the section joints may not be consistent with the spacing throughout the structure. If this condition presents any hazard, the step bolts must be removed. For proper safety Radian recommends a ladder and/or safety climbing device on towers and poles.

Radian will not be responsible for the use of step bolts. If you wish to use step bolts, the responsibility for their use will be totally yours or your customers.

Consumer Warranty

Seller makes no warranty of any kind, expressed or implied, and Buyer assumes all risk and liability resulting from the use of ROHN products, whether used singularly or in combination with other products.

Seller makes no warranty of merchantability of the products or the fitness of the products for any purpose.

Seller neither assumes nor authorizes any person to assume for Seller any other liability in connection with the sale or use of its products sold, and there are no oral agreements or warranties collateral to or affecting any sale.

The invalidity of any particular term or provision of this disclaimer shall not affect the validity of the remaining terms and provisions of the disclaimer and sales agreement.

Inspection and Maintenance Manual

The Radian Inspection and Maintenance Manual, available from Radian for $15, is a guide to help maintain your installation.

Section 1 of the three part manual includes information and directions on performing tower maintenance. Areas include safety precautions, paint, corrosion protection, connections, guy wires, insulators, welds, lighting, conduit and grounding.

Section 2 includes the drawings and check lists required to conduct an organized and thorough inspection of the structure. A second copy of all maintenance forms is included.

Section 3 provides room for special notes and contains drawings, specifications, and component lists for ROHN Lighting Equipment.

Installation and dismantling safety instructions

Each year people are killed, mutilated, or receive severe permanent injuries when attempting to install or dismantle towers, poles, and other structures. In many of these cases, the victim was aware of the dangers of electrocution but did not take adequate steps to avoid the hazard.

Good practice is to install your products away from power lines and obstructions. Your dealer carries a complete line of installation and grounding hardware.

For your safety and to help you achieve a safe installation, please **read and follow** the safety precautions below. **They may save your life!**

1. If you are not experienced in installing or dismantling, please, for your own safety as well as others, **seek professional assistance**. Consult your dealer.

2. Select your installation site with safety, as well as performance, in mind. **Remember: Power lines and phone lines look alike. For your safety, assume that any overhead lines can kill you.**

3. Call your power company. Tell them your plans and ask them to look at your site. This is little inconvenience, considering **your life is at stake.**

4. Before you begin, plan your installation or dismantling procedure carefully. Successful installation or dismantling is largely a matter of coordination. Each person should be assigned to a specific task and should know what to do and when to do it. One person should be designated as the "boss" to call out instructions and watch for signs of trouble.

5. When installing or dismantling, **Remember: Do not** use a metal ladder. **Do not** work on a wet or windy day or if a thunderstorm is approaching. **Do** dress properly – shoes with rubber soles and heels, rubber gloves, long sleeve shirt or jacket, and a hard hat.

6. If the assembly starts to drop, get away from it and let it fall. **Remember:** Antennas, masts, towers, cables, metal guy wires and other metal are all excellent conductors of electrical current. Even the **slightest touch** of any of these parts to a power line completes an electrical path through the installer!

7. If any part of the assembly should contact a power line – **Don't touch it or try to remove it yourself. Call your local power company.** They will remove it safely.

8. If an electrical accident should occur – **don't** grab hold of the person in contact with the power line or you too may be electrocuted. Use a **dry** board, stick or rope to push or pull the victim away from the antenna. Have someone call for medical help.

Considerations in Erecting Towers and Similar Products

Your local municipality or development may have established height and building standards governing the use of towers and similar products. Height restrictions are found in zoning ordinances and private deed restrictions. Building standards may be found in local building codes. Complying with these requirements is usually easy and will help to provide many years of safe and trouble free operation of your installation.

Zoning ordinances, building codes and private deed restrictions are complex legal documents. If you question whether they apply to you, consult a local attorney. Five minutes spent in advance can save many hours later.

Zoning ordinances, building codes and deed restrictions are local. If you move from city to city these restrictions may change.

Zoning ordinances are concerned with the type of buildings or other structures you can erect in your neighborhood. In terms of towers and similar products, zoning laws will tell you if your property is zoned for such items and, if so, what height limitations, if any, are involved.

Building codes are concerned with the safety of buildings or other structures permitted by local zoning ordinances. Building codes will tell you where on your property you can put the installation and the type of base and support (such as guy wires) you will need.

Both zoning and building codes are usually administered by the same governmental agency, often known as the Department of Building and Safety or the Zoning Board.

The Personal Communications Foundation believes that the following steps will help make sure you have a safe and legal installation:

1. Check with the local governmental agency. Ask whether your home is zoned for the type of product you wish to install.

2. Look at the actual zoning ordinances. Pay special attention to the definitions. Many zoning ordinances distinguish between "buildings" and "structures". Others distinguish between towers physically attached to the house, either by guy wires or mounting and towers that are not attached.

3. See if a building permit is required. If so, be sure to get one. They are usually quite inexpensive, often less than one percent of the cost of the tower. As part of the building permit, a local inspector will check and make sure that the base, guy wires, etc., meet local safety requirements. Properly manufactured commercially made towers are extremely safe and have a large safety margin, but only if you install them according to the directions! Paying $10.00 to $25.00 for an expert to inspect the foundation and finished installation is the cheapest insurance you can possibly buy! If a permit is required and not obtained, your home-owner's insurance may not insure the tower and you have given neighbors, who might object, a reason to require you to take the tower down.

4. In a limited number of cases you may need either a zoning variance or a conditional use permit to erect a structure higher than the local zoning board requirements. If so, it is far easier to apply in advance than to put up the structure and apply later. Most local governments are quite cooperative if you apply in advance and follow their rules. Variance provisions are used to provide flexibility from dimensional regulations such as setback or height restrictions. Conditional use permits are used where towers or antennas are not otherwise allowed. A public hearing is usually required before such permits are issued.

5. In addition to local ordinances, real estate developers or homeowners' associations may impose their own requirements in a subdivision. These requirements are usually known as deed restrictions or Conditions, Covenants and Restrictions (CC&R).

If you are thinking of moving into a new area, ask for a copy of the deed restrictions in advance of signing an offer to purchase the property. If you already own a home, a local realtor, title insurance company or lawyer can obtain copies of the deed restrictions, if any, for you. Don't take the word of the realtor who may be wrong!

If there are no deed restrictions, you need only be concerned with local zoning and building codes. If there are deed restrictions, read them carefully. Look at the definitions. See if there are any restrictions on outside structures or on the height of buildings or other structures of if a local architectural control committee must pass on any additions or changes to your property.

Deed restrictions are legal documents. A local lawyer familiar with real estate law can read the restrictions in only a few minutes and advise you. Even if the deed restrictions prohibit or restrict the size of towers and similar products, they may be unenforceable if many of your neighbors have erected such products and no objections have been raised.

This information has been adapted from the
PERSONAL COMMUNICATIONS FOUNDATION
10960 Wilshire Boulevard, Suite 1504
Los Angelos, CA 90024